THE

GRAND PRIX CAR

by

LAURENCE POMEROY

F.R.S.A., M.S.A.E.

Illustrated by

L. C. CRESSWELL

VOLUME TWO

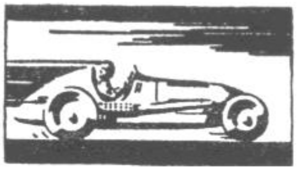

MOTOR RACING PUBLICATIONS
LIMITED

THE GRAND PRIX CAR (Volume Two)
Revised from THE GRAND PRIX CAR 1906-1939 with additional matter by
LAURENCE POMEROY, F.R.S.A., M.S.A.E.
is published in book form by
MOTOR RACING PUBLICATIONS LTD.
Conway Street, Fitzroy Square
London, W. 1
ENGLAND

Sole Distributors
TEMPLE PRESS LIMITED
Bowling Green Lane
London, E.C. 1

First Published ... May 1949
Revised Edition :
Volume Two .. November 1954

Made and Printed by
A. S. ATKINSON LTD.
154 CLERKENWELL ROAD, LONDON, E.C.1
ENGLAND

ACKNOWLEDGEMENT

The publishers wish to acknowledge the co-operation of TEMPLE PRESS LIMITED of Bowling Green Lane, London, and their permission to reproduce text and drawings from the " Milestones of Speed" series and other articles originally published in

The Motor

FOREWORD TO VOLUME TWO

THE first volume of the Second Edition of THE GRAND PRIX CAR set out the story of the major road races held before World War II and described in detail seventeen of the typical racing cars which were engaged successfully between 1908 and 1939. It can thus be regarded as a homogeneous work covering a period in which engines were produced giving more power than anything which has since been known, and wherein cars were designed capable of circuit speeds which have been equalled but recently.

Moreover, it was possible to give detail and perspective to both the cars, and to the races in which they ran, for the written matter concerning them was put on paper some ten years after the most recent of them had left the drawing-board to be tried on the track.

Since then a further six years have gone by, and a man who saw the 1939 cars in action, just before he came of age, is now nearer forty than thirty. It is all too easy to echo the cry

> " Eheu ! fugaces, Postume, Postume,
> Labuntur Anni . . ."

and the rest of these melancholy lines. But it is more profitable to evaluate the present in relation to the past and this is the task that I have set myself in this second volume of the Second Edition of THE GRAND PRIX CAR.

It has been possible to assess something of the significance of the very latest 1954 models and to describe and analyse all the cars which have been prominent in post-war racing run under Formulae I and II. A number of descriptions of the races themselves have also been included but the opening section dealing with post-war racing need not be, and the technical descriptions of post-war cars cannot be, on the scale set out in the first volume.

Detailed descriptions of races held between 1947 and 1954 would be redundant as there are a number of books and annuals in which the complete results have been set forth and the races themselves described. So far as the cars are concerned, we stand too close to present events accurately to weigh varying techniques, and in the case of the most successful cars of most recent dates the constructors are naturally reluctant to have full details revealed to possible rivals.

But whereas in Volume One a few typical cars were described in great detail, in the post-war period I have been able to describe all the principal participating models in some detail ; and the reader may think that this change of emphasis is not without some worth of its own.

The story of how the performance of Grand Prix cars has varied from the earliest times up to the end of 1953 has been segregated from the main text in an effort to show how an average speed index based on the 1906 Grand Prix Renault can be set up for all subsequent cars as a consequence of a continuing system of statistical analysis.

This wider view brings us to the second section of the book in which analysis is changed to synthesis, and the emphasis is placed not so much upon " know-how " as " know-why " Much of the material in this section has appeared already in the First Edition of THE GRAND PRIX CAR, but the opportunity has been taken to revise and correct much of the text, considerably to extend certain historic details, notably in respect of early supercharging experiments, and to include a number of hitherto unpublished illustrations. In concluding this section an attempt has been made to bring the technical story of the Grand Prix car right up to date, so that taking the work as a whole there is a complete narrative covering engineering developments for over fifty years.

The first and second volumes are complementary one with another, and indeed, Chapter VI, dealing with average speed indices (which is in any event somewhat hard reading), may be found almost unintelligible by any reader of this volume who is not familiar with the previously published data.*

Nevertheless it is this chapter which contains the root of the whole matter. The Victorian idea of steady progress has, in recent times, been set aside for the more traditional view expressed by Horace in the words (Sir Edward Marsh's translation) :

" Evil our grandsires were, our fathers worse ;
And we, till now unmatched in ill,
Must leave successors more corrupted still."

But this is certainly not so in the world of motor racing. The cars in current competition are as fast as, or even faster, than any previously built ; the courage of their conductors equal to anything displayed in earlier ages, and the sheer technical skill of the first half-dozen drivers at a higher level than anything achieved by earlier generations.

To conclude, I would like to thank all those who gave assistance in the preparation of the first volume equally for their great help in providing information for the second. To their names I would add those of Professor Dr. Ing. R. Eberan von Eberhorst for information concerning the Porsche-designed Cisitalia, Dipl.Ing. Aurelio Lampredi for providing information about the various Ferrari models, and also Mr. G. A. Vandervell who made it possible fully to describe the twelve-cylinder 4½-litre model. Mr. A. G. B. Owen and Messrs. Mays and Berthon have given all possible assistance in connection with the technical details of the B.R.M. and the descriptions of the other cars have also been reinforced by the kind co-operation of the directors and engineers concerned. The author would finally like to give his thanks to the Directors of Temple Press, Limited, without whose assistance and forbearance the whole work could never have been put before the public.

LAURENCE POMEROY, F.R.S.A., M.S.A.E.

London
October, 1954

---

* Volume One was published in February, 1954, and the text of 247 pages is in two parts. The first of these surveys motor racing from 1894 to 1939, in fourteen chapters, wherein are described 235 races, with tables, giving the winner and holder of record lap with respective speeds. Then, in Part Two, follow detail descriptions, fully illustrated, of seventeen typical Grand Prix cars : 1908 Itala 12-litre ; 1911 Fiat 10-litre ; 1912 Peugeot 5.6-litre ; 1913 Peugeot 3-litre ; 1914 Mercedes 4-litre ; 1920 Ballot 3-litre ; 1922 Vauxhall 3-litre ; 1922 Fiat 2-litre ; 1924 Sunbeam 2-litre ; 1927 Delage 1.5-litre ; 1926 Bugatti 2.3-litre ; 1930 Bentley 4.5-litre ; 1932 Alfa Romeo 2.65-litre ; 1934 Mercedes-Benz 4-litre ; 1936 Auto Union 6-litre ; 1937 Mercedes-Benz 5.66-litre and 1939 Mercedes-Benz 3-litre. In an appendix the results and lap speeds of 200 major races from 1906 to 1939 are tabulated.

CONTENTS
AND
LIST OF PLATES
FOR
VOLUME TWO

CONTENTS OF VOLUME TWO

Part Three :
RESTORING THE *STATUS QUO ANTE-BELLUM*

Part Four :
ANALYSIS AND SYNTHESIS

APPENDICES

LIST OF PLATES IN VOLUME TWO

The section of Plates Nos. VII-XXII will be found following page 113

ILLUSTRATION ACKNOWLEDGEMENTS

The Author wishes to acknowledge the valuable assistance received in the provision of illustrations and to thank in particular Jerry Cheseborough (Plates VIII, IX), Corrado Millanta (Plates XII, XIII, XVIII, XIX), Count G. Lurani (Plate XXII), P. C. Kidner, Esq. (Plate XXXII), and L. Klementaski, Esq. (Plate XLIII). The scale drawings of the B.R.M. and Ferrari Formula I and Formula II models were kindly supplied by Rex Hays, Esq.

ILLUSTRATIONS

ILLUSTRATIONS-Continued

GRAPHS

Part Three

RESTORING THE *STATUS QUO ANTE-BELLUM*

A Summary of Racing under Formulae I and II, and a description of the competing Grand Prix Cars of 1947-53

> *" Men's minds indeed conceive new thoughts and plan new projects, but out of ancient thinking, under the potent influence of long-established characteristics."*
>
> **The Times Lit. Supp.**

> *" . . . nothing is so hard, as to give wise council before events ; and nothing so easie as, after them, to make wise reflections. Many things seem true in reason. and prove false in experience : many, that are weakly consulted, are executed with success."*
>
> **Sir William Temple.**

CHAPTER ONE

The March of Events

FORMULA I - STATISTICS FOR MAJOR RACES, 1947-51

Date	*Event*	*Circuit*	*Driver*	*Car*	*Winning Speed (m.p.h.)*	*Best Lap (m.p.h.) (Rec'd*)*
7/7/47	Pau G.P.	Pau	N. Pagani	Maserati	51.95	55.5
8/5/47	J.C.C.	Jersey	R. Parnell	Maserati	84.52	—
			R. Sommer	Maserati	—	91.28*
8/6/47	Swiss G.P.	Berne	J.-P. Wimille	Alfa Romeo	95.42	96.85
29/6/47	Belgian G.P.	Spa	J.-P. Wimille	Alfa Romeo	95.28	101.94
6/7/47	Marne G.P.	Rheims	C. Kautz	Maserati	95.8	—
			L. Villoresi	Maserati	—	100.99
13/7/47	G.P. d'Albigeois	Albi	L. Rosier	Talbot	88.41	—
			L. Villoresi	Maserati	—	98.2
13/7/47	Bari G.P.	Lungomare	A. Varzi	Alfa Romeo	65.1	70.68*
7/9/47	Italian G.P.	Turin	C. Trossi	Alfa Romeo	70.29	74.16
21/9/47	G.P. de l'A.C.F.	Lyons	L. Chiron	Talbot	78.09	—
			Villoresi, Ascari, de Graffenried	Maseratis	—	82.4*
12/10/47	Turin G.P.	Turin	R. Sommer	Ferrari	67.5	69.88*
29/3/48	Pau G.P.	Pau	N. Pagani	Maserati	53.07	—
			J.-P. Wimille	Simca	—	56.29
29/4/48	J.C.C.	Jersey	F. R. Gerard	E.R.A.	87.33	90.42
30/4/48	G.P. des Nations	Geneva	G. Farina	Maserati	61.38	63.86*
16/5/48	Monaco G.P.	Monte Carlo	G. Farina	Maserati	59.61	62.32
27/6/48	San Remo	San Remo	A. Ascari	Maserati	57.66	—
4/7/48	G.P. de l'Europe	Berne	C. F. Trossi	Alfa Romeo	90.81	
			J.-P. Wimille	Alfa Romeo	—	95.05
18/7/48	G.P. de l'A.C.F.	Rheims	J.-P. Wimille	Alfa Romeo	102.1	108.14 112.2 (P)
29/8/48	G.P. d'Albigeois	Albi	L. Villoresi	Maserati	99.88	104.42*
5/9/48	Italian G.P.	Turin	J.-P. Wimille	Alfa Romeo	70.38	78.61 (P)
2/10/48	R.A.C. G.P.	Silverstone with chicanes	L. Villoresi	Maserati	72.28	76.82*

Formula I-Statistics for Major Races, 1947-51 (continued)

7/10/48	Monza G.P.	Monza	J.-P. Wimille C. Sanesi	Alfa Romeo Alfa Romeo	109.98 —	 116.95*
1/10/48	Penya Rhin	Pedralbes	L. Villoresi	Maserati	89.44	94.16*
3/4/49	San Remo G.P.	San Remo	J. M. Fangio B. Bira	Maserati Maserati	62.87 —	— 64.66*
28/4/49	B.A.R.C.	Jersey	F. R. Gerard L. Villoresi	E.R.A. Maserati	77.1 —	— 90.0
14/5/49	British G.P.	Silverstone with chicane	de Graffenried B. Bira	Maserati Maserati	77.31 —	— 82.82
18/5/49	Pau G.P.	Pau	J. M. Fangio	Maserati	52.7	56.85
19/6/49	Belgian G.P.	Spa	L. Rosier G. Farina	Talbot Maserati	96.95 —	— 101.64
3/7/49	Swiss G.P.	Berne	A. Ascari G. Farina	Ferrari Maserati	90.76 —	— 95.1
10/7/49	G.P. d'Albigeois	Albi	J. M. Fangio	Maserati	98.19	102.17
17/7/49	G.P. de France	Rheims	L. Chiron P. Whitehead	Talbot Ferrari	99.98 —	— 105.1
31/7/49	Zandvoort G.P.	Zandvoort	L. Villoresi B. Bira	Ferrari Maserati	77.12 —	— 79.49*
20/8/49	International Trophy	Silverstone perimeter	A. Ascari	Ferrari	89.58	93.35*
11/9/49	G.P. d'Europe	Monza	A. Ascari	Ferrari	105.04	112.72(P)
10/4/50	Pau G.P.	Pau	J. M. Fangio	Maserati	58.4	60.28*
16/4/50	San Remo	San Remo	J. M. Fangio L. Villoresi	Alfa Romeo Ferrari	59.65	— 62.3
13/5/50	G.P. de l'Europe	Silverstone	G. Farina	Alfa Romeo	90.95	94.02*
21/5/50	Monaco G.P.	Monte Carlo	J. M. Fangio	Alfa Romeo	61.33	64.09
4/6/50	Swiss G.P.	Berne	G. Farina	Alfa Romeo	92.76	100.78
18/6/50	Belgian G.P.	Short Spa	J. M. Fangio G. Farina	Alfa Romeo Alfa Romeo	110.05 —	— 115.15
2/7/50	A.C.F. G.P.	Rheims	J. M. Fangio	Alfa Romeo	104.83	112.35 116.2 (P)
9/7/50	Bari	Lungomare	G. Farina	Alfa Romeo	77.31	81.28
13/7/50	B.A.R.C.	Jersey	P. Whitehead D. Hampshire	Ferrari Maserati	90.94 —	— 94.43*
15/7/50	Circuit of Pescara	Pescara	J. M. Fangio	Alfa Romeo	83.95	90.33
17/7/50	Albi G.P.	Albi	L. Rosier J. M. Fangio	Talbot Maserati	— —	— 106.63*
23/7/50	Netherlands G.P.	Zandvoort	L. Rosier J. M. Fangio	Talbot Maserati	76.44 —	— 83.5*

Formula I-Statistics for Major Races, 1947-51 (continued)

30/7/50	G.P. des Nations	Geneva	J. M. Fangio	Alfa Romeo	79.74	
			P. Taruffi	Alfa Romeo	—	85.63*
26/8/50	International Trophy	Silverstone	G. Farina	Alfa Romeo	90.16	92.85
3/9/50	Italian G.P.	Monza	G. Farina	Alfa Romeo	109.67	—
			J. M. Fangio	Alfa Romeo	—	117.44*
29/10/50	Penya Rhin	Pedralbes	A. Ascari	Ferrari	93.8	97.7*
26/3/51	Pau G.P.	Pau	L. Villoresi	Ferrari	57.32	
			A. Ascari	Ferrari	—	60.15
22/4/51	San Remo	San Remo	A. Ascari	Ferrari	63.9	66.28*
27/5/51	Swiss G.P.	Berne	J. M. Fangio	Alfa Romeo	89.05	104.46(P)
17/6/51	Belgian G.P.	Short Spa	G. Farina	Alfa Romeo	114.26	—
			J. M. Fangio	Alfa Romeo	—	120.51*
1/7/51	A.C.F. G.P.	Rheims	J. M. Fangio	Alfa Romeo	110.97	118.29* 119.99(P)
14/7/51	British G.P.	Silverstone	F. Gonzales	Ferrari	96.11	100.65(P)
			G. Farina	Alfa Romeo	—	99.9*
22/7/51	Netherlands G.P.	Zandvoort	L. Rosier	Talbot	78.46	—
			A. Pilette	Talbot	—	82.27
29/7/51	German G.P.	Nürburg	A. Ascari	Ferrari	83.76	—
			J. M. Fangio	Alfa Romeo	—	85.69
20/5/51	Paris G.P.	Bagatelle	G. Farina	Maserati	67.3	
			J. M. Fangio	Simca	—	70.97
2/6/51	Ulster Trophy	Dundrod	G. Farina	Alfa Romeo	91.4	94.0*
5/8/51	Albi G.P.	Albi	M. Trintignant	Simca	100.2	104.53
16/8/51	Pescara	Pescara	F. Gonzales	Ferrari	85.32	88.86
2/9/51	Bari G.P.	Lungomare	J. M. Fangio	Alfa Romeo	83.92	—
			A. Ascari	Ferrari	—	87.89*
16/9/51	Italian G.P.	Monza	A. Ascari	Ferrari	115.53	—
			G. Farina	Alfa Romeo	—	120.97* 124.53(P)
28/10/51	Spanish G.P.	Pedralbes	J. M. Fangio	Alfa Romeo	98.76	105.2*
			A. Ascari	Ferrari	—	108.1(P)

THE first post-war road race to be held in Europe was run on September 9th, 1945, on a 1¾-mile circuit in Bois de Boulogne, just outside Paris, and held under *formule libre* it resulted in a win for a Bugatti, driven by Jean-Pierre Wimille, who averaged 71 m.p.h. over a distance of 70 miles. During 1946 nineteen races were held under various regulations in Europe (starting with the Nice Grand Prix on April 22nd), and one meeting was organised in England jointly by the Cambridge University Automobile Club and the Vintage Sports-Car Club, and another in Northern Ireland where the Ulster Automobile Club put on a 50-mile road race. It is hard now to recollect the immense dislocation in the immediate post-war period and it is really remarkable that racing should so quickly re-establish itself in the face of great shortage of supplies of fuel, plugs and, more particularly, tyres, and the very difficult communications owing to the damage done to harbours and bridges during the last few months of the war period. The members of the F.I.A. were fully cognisant of these problems when they laid down Formula I and they doubtless had in their minds the fact that there were a number of existing 4½-litre cars which had run unsupercharged in the 1938-9 formula and an even larger number of 1½-litre cars which had competed in voiturette races between 1934 and 1939. They decided, quite rightly, that the conjunction of these two types should, from fundamental considerations, result in very balanced competition. The pool of racing cars which could immediately be drawn upon may be conveniently sub-divided into nationalities as follows :

FRANCE

Delahaye
One single-seater, twelve-cylinder, unsupercharged 4½-litre.

Talbot
Several six-cylinder, 4-litre models with offset single-seater bodies as run at Rheims in 1938 with a lap speed of 98.8 m.p.h. Also one central single-seater using a modified chassis which ran in the 1939 French Grand Prix and lapped the Rheims circuit at 105 m.p.h.

GERMANY

Mercedes-Benz
1½-litre V.8, Type W165. These were not available for use by the company as a consequence of their having been interned in Switzerland during the war years.

GREAT BRITAIN

Alta
1½-litre, four-cylinder, designed in 1939 with all-independent wheel suspension and tubular frame.

E.R.A.
A, B and C Types (1934-7), six-cylinder, 1½-litre with Roots supercharger on A and B Type chassis having rigid front axle ; and Zoller compressor on C Type fitted with trailing arm i.f.s.

E Type (1939) six-cylinder with larger piston area and shorter stroke, Zoller supercharged, engine installed in tubular frame with trailing arm front suspension and de Dion rear axle.

ITALY

Alfa Romeo
Eight-cylinder, in-line, 1½-litre cars with single Roots blowers, trailing arm front suspension, tubular frames, and swing axle rear suspension. These cars had been designed in 1937 and had run with great success in the 1½-litre races of

1938-9. They had continued to race during 1940 and had won the Tripoli Grand Prix in that year at a speed higher than that achieved by the 1½-litre Mercedes-Benz cars which had defeated them in the previous year.

Maserati
Represented by a number of four- and six-cylinder, 1½-litre cars dating back to 1934 but primarily by the Type 4 CL which appeared in 1939. This had a four-cylinder engine with a single Roots blower, independent front suspension with wishbones connected to torsion bars and normal live axle attached to the frame by quarter-elliptic springs. The channel-type frame was cross-braced by a cast light-alloy oil tank placed beneath the driving seat.

The specifications of these cars are considered in more detail in subsequent Chapters, but the foregoing will suffice to put the reader in the picture for the brief survey of the immediate post-war racing which is about to be set down.

In the first year of Formula I Maserati won the first race to be organised, which was at Nice, and this was a prelude to a very happy year for them in which they won no fewer than six major events.

Talbot were the third most successful car from a statistical point of view and whereas Maserati did not win any of the Grandes Epreuves, Talbot were both first and third in the French Grand Prix.

It is worth recording that if we except 1936 and 1937, when the Grand Prix de l'A.C.F. was run under sports-car regulations, this was the first time the event had been won by an unsupercharged car since 1923 and it was the first Grande Epreuve of any kind to be won by an unsupercharged car since the 1925 Targa Florio.

It is only fair to add that Alfa Romeo were not competing in the French event of 1947, and that they were unbeatable in the Grandes Epreuves organised by the Swiss, Belgian and Italian National Clubs, and in fact occupied the first three positions in all three of them. The overwhelming supremacy of these cars (which now bore the designation Type 158) was due in part to modifications to the induction system in the shape of two-stage blowing which made its first appearance on the cars which ran in the Grand Prix des Nations at Geneva, in July, 1946. This had the effect of raising the output to 254 b.h.p. at 7,500 r.p.m., which compared with 225 h.p. at the same engine speed obtained from the single-stage models at the end of 1939, and 190 b.h.p. at 6,500 r.p.m. which had been realised on the first tests made in 1938. During the course of 1947, the engine speed remained at 7,500 r.p.m. but output was raised to 265 h.p. Although Alfa Romeo came second on the list of wins (and equally second on a points system which gives 5 points for a first, 3 for a second, and 1 for a third place), there is no question that they were the finest racing cars of the year.

The racing record by makes for all the Formula I races held until the end of 1951 is set out in tabular form, and reference to this table will show that no make other than those mentioned above secured a win in Formula I racing in 1947. A summary of the year should, however, not be concluded without reference to a matter of historic importance. This was the appearance in racing (although not in Formula I) of a new make : Ferrari.

Enzo Ferrari had, for many years, run a team of Alfa Romeo cars as a private venture (the Scuderia Ferrari), and the 1½-litre Alfa Romeo models had, in fact, been designed at his request, the engine tested in his workshops at Modena, and the cars raced by his organisation in the pre-war years. Moreover, his new car was designed by an ex-Alfa Romeo engineer, Colombo, who had been closely associated with the Type 158. As built in 1947 and raced at Modena and Turin, the car took the form of a 2-litre sports-model fitted with a V.12-cylinder engine fitted into a tubular chassis having independent front suspension using a transverse leaf and normal live rear-axle.

Of the British cars, only the E.R.A. B Type was successful during 1947 (with two third places), although both Alta and all the various types of E.R.A. appeared on the entry lists. Unfortunately, only the E Type with high supercharge pressure could offer performance equivalent to the leading Continental cars and the racing history of this model in 1947 was dogged by an unreliability and misfortune which pursued it until it was withdrawn from active competition in 1949.

In 1948 Alfa Romeo maintained their superiority using a car with the Type No. 158/47 which had been developed during the previous year, but not actually raced therein. The principal difference between this and the preceding model was a larger first-stage blower giving higher supercharge pressure, and during the year the power output was raised to 310 h.p. without changing the peak crankshaft speed of 7,500 r.p.m. The Belgians did not stage a Grande Epreuve and Alfa Romeo did not compete in the revived R.A.C. Grand Prix which, for this year only, was held over a very circuitous aerodrome course. All the other Grandes Epreuves were won by Alfa Romeo, also a race run as the Monza Grand Prix over a reconstructed circuit on this historic site.

Competing in only four races, the Milan firm could not have achieved more than 36 points, and did in fact obtain 31 ; even so this was only half the number secured by Maserati, which continued to be the most successful racing car of the year if one takes all events into consideration. Although not a match for the Alfa Romeo on sheer speed, the Maserati made a considerable step forward when they introduced the Type 4 CLT 48 for the San Remo Grand Prix at the end of June. This, it should be noted, followed the departure of the Maserati brothers themselves from the firm in 1947, leaving it to Signor Orsi, as chief designer, to produce a model with a two-stage supercharged engine with a claimed 240 h.p. installed in a chassis having a tubular frame and independent front suspension with wishbones conjoined to short helical springs working at about 60 degrees from the vertical. The rear suspension elements remained unchanged but the bodywork was improved, the front cowling being very noticeably lower. There were also some internal alterations to the engine.

The works-sponsored San Remo Maseratis driven throughout the year by Alberto Ascari and Luigi Villoresi were beaten only by Alfa Romeo, and Lago Talbot had a somewhat disappointing year despite the introduction of a newly engined car which made its first appearance at Monte Carlo on May 16th and achieved second place therein. In addition to a 4½-litre in place of a 4-litre swept volume, the new power unit had 90-degree valves worked by push-rods and rockers from two camshafts, and three carburetters with an external conduit to their intakes mounted above the bonnet.

Somewhat strangely, the speed of this car on the Rheims circuit was a good deal slower than that of the single camshaft 4-litre of the previous year and the model compared very unfavourably with the San Remo Type Maserati, which in turn was equally far away from the remarkable speed of the Type 158/47 Alfa Romeo.

Probably the finest demonstration of the potential pace of the latter was seen during practice for the A.C.F. Grand Prix at Rheims when J.-P. Wimille made a special attempt with a cleared course to equal the race lap record put up by the Type W163 Mercedes-Benz in 1939. Although he failed in his endeavour he was undoubtedly driving the car at the highest possible speed at this time, and he was over 11 m.p.h. faster than the best lap put up the previous year on the circuit by the 4 CL Maserati.

There were two other notable features of the 1948 season. One of these was something of a comeback by the B and C Type E.R.A. cars in the hands of private owners. Running with lower boost and Roots-type blowers, these pre-war cars blended speed with reliability in such a manner that they were able to win two of the lesser races and failed by only one mark to finish equally third with Lago Talbot on a points basis. As a presage of the future the arrival of Ferrari in Formula I racing was more important.

Three of these cars made their debut on September 5th at the Italian Grand Prix and they differed from the 2-litre model which ran at the end of 1947 not only by having the engine capacity reduced to 1½ litres, but also by the provision of a single Roots blower, all-independent wheel suspension with swing axle at the rear, and the remarkably short wheelbase of 7 ft. 1 in. The Italian Grand Prix was run in heavy rain and the one Ferrari which finished took third place. In the Monza Grand Prix no Ferrari finished, but the 1½-litre car ended the season by taking first and second places at Garda and earlier in the year the unblown 2-litre picked up a third place in Geneva.

By the end of 1948 Alfa Romeo had shown complete superiority over all opposition in three seasons of racing, two of them under Formula I regulations. With this to their credit they decided, for at least twelve months, not to incur the very big expenses involved in a Grand Prix racing season and the Grandes Epreuves in the third year of Formula I were in consequence more closely contested but run at lower speeds. The loss in speed may be best appreciated if set out in tabular form thus :

LAP SPEEDS OF 1949 FORMULA I CARS, cf. 1946-8 Type 158 Alfa Romeo

Cars	*Rheims*	*Berne*	*Monza*
1946-8 Alfa Romeo	112.2	96.85	116.95 m.p.h.
1949 1.5-litre Ferrari	107.9	92.9	112.72 m.p.h.
1949 1.5-litre 4 CLT Maserati	106.7	95.26	110.6 m.p.h.
1949 4.5-litre Talbot	99.98	92.4	104.5 m.p.h.

Some of the lesser Formula I races, on the other hand, showed a marked increase in speed, for example, at San Remo the race winning speed of the 4 CLT Maserati, of which this event became the cognomen, rose from 57.66 to 62.87 m.p.h. In the absence of Alfa Romeo this model was certainly the fastest racing car taking the whole range of major international Formula I events into consideration. This notwithstanding, Ferrari can legitimately claim that they stepped into the shoes left vacant by Alfa Romeo so far as the Grandes Epreuves were concerned, for whereas Maserati was victorious in only one race of this calibre Ferrari were first and second ; first and third ; first ; and second and third in the remaining races of this order. They were additionally third in the Grand Prix de France at Rheims, which was won by a Talbot. This had the moral importance of a Grand Epreuve in that the traditional Grand Prix de l'A.C.F. was run elsewhere as a sports-car event. Only this technicality prevents Talbot from inscribing two French Grand Prix wins on their record and they were also winners of the Belgian Grand Prix and runners-up in the European and Czechoslovakian Grands Prix.

The works-sponsored Talbots of this year were, of course, all of the double-camshaft type with centrally placed single-seater bodies but they were still so much slower than the 1½-litre supercharged cars that it seemed most unlikely that atmospheric could ever challenge high density induction within the framework of Formula I.

Undoubtedly the fastest car of the year was a twin-camshaft, two-stage blown Ferrari which made a single appearance at the end of the season (September) to win the European Grand Prix on the Monza circuit.

At this stage the E.R.A.s with six or more racing seasons behind them continued roughly to equal in speed the post-war 4½-litre Talbots, and they kept themselves in the picture not only with two firsts in races which some may consider of only local interest, but also with a well-merited second in a Grande Epreuve.

In 1950 Alfa Romeo received financial assistance which enabled them to return to the field of Formula I racing. As the highest lap speed of the two-stage Ferrari at Monza in 1949 had been 112.72 m.p.h. as compared with the Type 158's 116.95 m.p.h. Alfa Romeo had no hesitation in bringing their now thirteen-year-old design out of storage and embarking on another racing year with it. In order, however, to ward off any surprises which might be sprung upon them by other rivals (including doubtless the British B.R.M., of which much was beginning to be heard) the peak r.p.m. was raised from 7,500 to 8,500 with a corresponding increase in h.p. from 310 to 350 without change of b.m.e.p. Detail changes to the air intake and exhaust manifolds were also made, and it is a striking testimony to the soundness of the original design that these cars were once again able to sweep the board by winning all the Grandes Epreuves and amassing a total of 79 points in the twelve events in which they competed. Moreover, although it cannot be said that they were really hard-pressed until the very end of the season, they consistently broke previous Formula I lap records including a practice lap at 116.2 m.p.h. on the Rheims circuit, which broke the 114.86 m.p.h. put up during the 1939 race by Lang on the Mercedes-Benz, and came very near to the 117.5 m.p.h. put up by the same combination in practice. Despite the advantages of more recent design and substantially greater piston area the 1½-litre two-stage Ferrari was quite unable to challenge the older Alfa Romeo models, although it should be recorded that right at the beginning of the season (in mid-April) it took second place in the San Remo Grand Prix and was faster than the Type 158 over a lap but at a speed of only 62.3 m.p.h. As this was also less than the 62.87 m.p.h. recorded by a Maserati in 1949, the figures have no significance. On the Spa, Monaco and Berne circuits, in the races run between May 21st and .June 18th, the blown Ferrari was obviously outclassed, the fact of the matter being that it was, if anything, slower than the Alfa Romeo in its 1948 form.

Only two of these cars appear to have been constructed and the main effort of the Ferrari factory in 1950 was a bold attempt to challenge the apparently invincible 1½-litre supercharged type by a modern interpretation of the 4.5-litre unsupercharged alternative. As before stated, nothing in the previous history of Formula I racing lent any support to the notion that this was a hopeful proceeding, but there were, nevertheless, theoretical considerations which at least justified the attempt. These are dealt with on a later page, and it will suffice to say for the moment that there were also practical reasons for this line of attack.

The combination of 8,500 r.p.m. with 3,900 ft./min. piston speed and 360 lb./sq. in. b.m.e.p. limited the life between overhauls of an Alfa Romeo engine to one event only, and maintenance on this scale was prohibitively expensive to a company like Ferrari which relied solely upon starting and prize money to justify the economic aspect of Grand Prix racing. It was largely for this reason that Ferrari entrusted Aurelio Lampredi in September, 1949, (when the twin-camshaft, two-stage supercharged engine of Colombo was already completed) with the task of laying out an unsupercharged engine which could be installed in the same chassis. The first Lampredi version-a Vee twelve-cylinder having a swept volume of 3.3 litres-was put on the test-bed in March, 1950, and ran in the sports-car class of the Mille Miglia race on April 23rd. It made a first appearance in a racing car on June 18th at Spa, on which circuit it was 2 seconds slower than the two-stage supercharged model from the same factory. In its second appearance in the Grand Prix des Nations on July 30th at Geneva it proved in practice faster than all the Alfa Romeos with the exception of that driven by Fangio, but on this occasion the engine had been modified to increase the swept volume to 4.1 litres. In the race itself Ascari held second position for over half distance.

Development of the model was continued by further enlargement to 4½ litres for the Italian Grand Prix held on September 3rd and in practice for this event the car not only broke the existing lap record by a handsome margin (reaching 118.75 m.p.h.) but was only 0.2 seconds slower than the Alfa Romeo driven by Fangio, and 1.4 seconds faster than any other Alfa Romeo. In the last race of the season (Penya Rhin Grand Prix at Barcelona on October 29th) three of these unblown Ferraris (one of them with a 4.1-litre engine) had, in the absence of Alfa Romeo, no opposition owing to the comparatively poor showing of the B.R.M., of which so much had been expected.

The B.R.M. design may be considered the apotheosis of the 1½-litre supercharged type with a sixteen-cylinder engine designed to run at between 10,000 and 12,000 r.p.m. and to develop over 400 h.p. Built under the sponsorship of Raymond Mays and Peter Berthon, who had been responsible for the pre-war E.R.A. models, it represented the co-operative efforts of a large number of British component and automobile manufacturers and the first model was shown to a selected audience in December, 1949. During 1950 the car appeared on the starting line twice. On the first occasion it failed to leave it and at Barcelona one car failed after completing two laps only, whilst another ran for two-thirds of the full distance before retiring when in fourth place.

Of the remaining competitors in Formula I racing, the most prominent were Maserati and Talbot. The former won the Grand Prix of Czechoslovakia and the latter the Dutch Grand Prix, but whereas the Italian car, bereft of works support, showed on the year's results an actual recession in average-speed index, the Talbot showed a very useful advance on the previous year's form. As set out subsequently neither could approach the performances of the Alfa Romeo and Ferrari cars, and, as one might reasonably expect, the increasingly elderly E.R.A.s receded still further into the background.

Having shown by their performances in September and October of 1950 that a twelve-cylinder, unblown 4½-litre car with 93 sq. in. of piston area was very nearly a match for a two-stage supercharged model with eight-cylinders and 33 sq. in. of piston area, everyone anticipated an extremely keen struggle between these rival concepts as exemplified by Ferrari and Alfa Romeo during the 1951 season. These hopes were not disappointed. Both makes improved materially upon their speeds of the previous year and Alfa Romeo retained a very slight advantage in speed over Ferrari which enabled them to win the world's championship. But for the first time, and against all the indications of only two years previously, the unsupercharged cars scored three decisive victories on such widely differing courses as the Silverstone aerodrome perimeter, the Niirburg Ring and Monza.

The issue was joined first on May 27th on the Bremgarten circuit at Berne which was won in heavy rain by Alfa Romeo from Ferrari by a margin of under one minute, after the Alfa Romeo, in practice, had lapped at 104.46 m.p.h. as compared with the best Ferrari of 102.22 m.p.h. Both cars, it will be noticed, were much faster than the best speed of 1950, which was 100.47 m.p.h. by Alfa Romeo.

The same train of events ensued on June 17th in the Belgian Grand Prix at Spa. When the current revised circuit was first used for this event in 1950 the Alfa Romeo had put up 115.15 m.p.h. and the 3.3-litre Ferrari 108.9 m.p.h. In 1951 Fangio on the Alfa Romeo achieved 120.51 m.p.h. during the race itself. In practice the fastest Ferrari achieved 116.5 m.p.h. and the two cars entered took second and third positions after the fastest Alfa Romeo driven by Fangio had been delayed by a newly designed wheel failing to come off the splined hub.

These very big gains in speed so early in the season showed that the stories which had circulated during the spring of 1951 regarding the greatly increased power output of both cars were not amiss. An extension of the Ferrari output from around 330 h.p. at 6,500 r.p.m. to some 380 h.p. at 7,500 r.p.m. was a logical expectation for even at the higher rating both piston speed and b.m.e.p. were moderate. By contrast, the extraction of yet more power from the Alfa Romeo was a real feat of legerdemain and it was claimed that with even higher supercharge pressure from the two-stage Roots blower the engine output was over 400 b.h.p. at over 10,000 r.p.m. and more than 4,600 ft. min. piston speed. The very high resultant stresses, mechanical and thermal, could only be dealt with by running on very rich mixtures of alcohol fuel with exceedingly large valve overlap. This reduced the fuel consumption to below 1.5 m.p.g. and enforced the use of 65-gallon fuel tanks, as a consequence of which the fuel weight was over 5 cwt. and represented about 20 per cent of the total weight of the car. This upset the handling qualities and made it impossible to use full power until the tank had been partly emptied, thus imposing a restraint on the driver at least twice during the course of a race.

During the year, some of the Alfa Romeos appeared with simple de Dion type rear axles in place of the usual swing axle arrangements and all of them had wider and stiffer brake drums. There is no evidence that the change in axle construction had any decisive influence on lap speed, but as shown in the technical analysis which appears later the improved brakes, plus developments in the suspension system in the way of new shock absorbers, must have played quite a large part in the very large gain in speed witnessed during the year.

The extent of this gain was shown to the full on July lst, on the Rheims circuit, in the course of a dramatic struggle for the Grand Prix d'Europe. In practice for this event, which proved the first of three which had unique historic importance, both Ferrari and Alfa Romeo broke not only existing Formula I records but also the long-standing figures set up in 1939 by the 3-litre Mercedes-Benz. Fangio on the fastest Alfa Romeo put in a circuit at 119.99 m.p.h., and Ascari on the Ferrari reached 117.95 m.p.h. That this was not a flash in the pan is shown by the fact that, despite being forced to change cars during the race, Fangio secured a victory for Alfa Romeo at 110.97 m.p.h.-a really astonishing increment over the 104.83 m.p.h. set up over a shorter distance in 1950 and exceeding by a clear 5 m.p.h. the previous fastest speed for the race-distance set up by Muller on the 3-litre Auto Union, who averaged 105.25 m.p.h. in 1939. This was the first occasion a Formula I car had broken a speed record set up by a pre-war car, and it was but a fortnight later that another happening unique of its kind was witnessed. In the British Grand Prix held on the Silverstone circuit a car powered by an unsupercharged engine defeated the supercharged models, when Gonzales on the Ferrari showed himself the master of Fangio on the Alfa Romeo ; and although Farina on one of the latter made the fastest lap of the race he did not quite equal the speed put up by Fangio in practice. This was not the first occasion in which an unsupercharged engine had beaten a supercharged type under the Formula I regulations, for most of the Talbot wins had been at the expense of Maserati. It was, however, the first time since June, 1946 (St. Cloud), that the Type 158 Alfa Romeo had been defeated, thus ending an unbroken run of twenty-five successes in five-and-a-half years, which is the longest sequence of victories, whether measured by years or number, of any single make or type in the whole history of motor racing.

The Nürburg Ring, where the German Grand Prix was staged on July 29th was the setting for the third unique event in one month. This was a win for the unblown type of car at a record average speed for the entire race distance, Ascari's average on the Ferrari of 83.76 m.p.h. being appreciably faster than the previous record held by Caracciola who, in 1937, averaged 82.77 m.p.h. on the 5.6-litre Mercedes-Benz.

Fangio on the Alfa Romeo put up the fastest lap ever seen during a German Grand Prix but just failed to equal a lap put up in 1939 by Lang on the 3-litre Mercedes-Benz during his victorious drive in the Eifelrennen which was, however, run over ten laps as against the twenty laps which had to be covered in 1951.

Ferrari won the Italian Grand Prix, and their third Grande Epreuve in succession, at Monza. Alfa Romeo appeared with modified cars called the Type 159, all with de Dion rear suspension, extra fuel tanks, and air intake to the carburetters through the scuttle, and these models showed an astonishing speed in practice. They advanced their previous best of 120.97 m.p.h. (set up in 1950) to 124.53 m.p.h. which is the highest speed ever recorded on a European circuit. Ferrari also broke the previous record with a speed of 122.5 m.p.h. They had modified bodies, shorter scuttles and longer tails which embraced larger fuel tanks.

Only one event now remained in the 1951 World Championship. As Alfa Romeo had won the first three Grandes Epreuves and then Ferrari in turn had brought off a hat trick, the winner of the Spanish Grand Prix (which was also the Eleventh Penya Rhin) would, *ipso facto,* be the winner of the World Championship. Ferrari had the advantage of experience in 1950 whereas Alfa Romeo came fresh to the scene. It is all the more surprising that it was the more experienced company which made the mistake in tactics which cost them dear. Ferrari decided to enlarge the tyre section and to use a 16-in. rim, whereas Alfa Romeo employed an 18-in. rear wheel with a smaller cover. Ferrari's experiment proved disastrous as the sustained speed possible on the straight, which is 1¾ miles long, resulted in the loss of tyre treads, and the loss of the race itself. Hence, although Ascari put in a practice lap on a Ferrari at 108.1 m.p.h., which compares with the 98.2 m.p.h. by the same model on the same course the previous year and with 106.9 m.p.h. by Alfa Romeo, the latter won the race and the World Championship, The overall speed of 98.76 m.p.h. for 275 miles compares with the Ferrari speed of 93.8 m.p.h. for 196 miles in the previous year.

In sum, the speed of both Alfa Romeo and Ferrari increased by nearly four per cent from one racing season to another and to all intents and purposes both were as fast as the 3-litre Mercedes-Benz and Auto Union cars which ran in 1939. Within five years, therefore, the historic process whereby the cars of a new Formula equal the speeds of the cars built under the preceding Formula had been re-enacted.

The differences in speed between Alfa Romeo and Ferrari during the whole year may perhaps best be realised by imagining that they had been asked to cover a single lap 43.1 miles long made up of the circuits at Berne, Spa, Rheims, Silverstone, Nürburg Ring, Monza and Barcelona, put, as it were, end to end. The fastest Alfa Romeo would have covered this lap (about equal in length to the Dieppe circuit of 1912) in 26 mins. 25.2 sets. at a speed of 97.8 m.p.h. and the fastest Ferrari would have come past 12.6 seconds later at an average speed of 97.1 m.p.h. The total eclipse of all rivals to these two Italian cars can perhaps best be appreciated by a safe estimate that none of them would have reached an average of even 90 m.p.h. on such a hypothetical circuit.

Dealing with the race record of " the field " in detail, the gallant, aged E.R.A.s virtually disappeared from the racing scene and with lack of works support for both Maserati and Talbot cars the speed reached by these models on a circuit was in many cases less than that reached in previous years. The Talbots, however, continued to pick up a number of places, whereas the decline of Maserati was almost absolute, as the sole " success " of the season was a third place at Pau.

Once again, the B.R.M., the only make that could in theory challenge the Italian models, failed to do so in practice. Two cars made a last-minute appearance on the starting-line in the British Grand Prix in mid-July and they ran without mechanical failure and finished in fifth and seventh positions. Following this, two cars were entered for the Italian Grand Prix but both gave trouble in practice and failed to start. After this, tests continued to be made on the Monza circuit and a lap speed of 120.5 m.p.h. was reached. We can thus say that the B.R.M. in 1951 was appreciably faster than the Alfa Romeo and Ferrari models of 1950, but substantially slower than the contemporary editions of these makes.

When Formula I was agreed at a meeting of the Federation Internationale de l'Automobile on February 28th, 1946, it was intended that it should cover the years 1947, 1948, 1949, 1950 and 1951. In October, 1951, the F.I.A. decided to extend the life of Formula I up to the end of December, 1953, that is to say, by a further two years. It simultaneously announced that from January 1st, 1954 onward, the Grand Prix Formula would be based upon a capacity limit of 2½ litres for unsupercharged engines and 750 c.c. with supercharged engines.

Following this Alfa Romeo decided that their basically 1937 design of 1½-litre car could not usefully be run for two more seasons and Mercedes-Benz concluded that with only two more years of life for the Formula it would be impolitic to construct the 1½-litre supercharged cars which they had been completing on the drawing board. This left the 4½-litre Ferraris unchallenged, unless B.R.M. could prove that in the extended life of the Formula it was going to redeem the theoretical promises which had failed to materialise during the previous three years. If it did not then organising clubs, needing inter-make competition to attract the crowd, would have to run their races on the basis of Formula II, which limited unsupercharged cars to a swept volume of 2,000 c.c. and supercharged engines to 500 c.c.

It is possible that this broad question was decided on April 6th, 1952. During March the B.R.M. team had been carrying out extended tests at Monza and it was hoped that on this date they would show their ability to compete with the 4½-litre Ferraris on the St. Valentine circuit just outside Turin, where a race over 156 miles was held. The B.R.M. organisation decided, however, to bring the cars back to England from Monza for modifications, so the race itself was won without British opposition by Villoresi on a 4½-litre Ferrari with another Ferrari, handled by Farina, making fastest lap at 70.12 m.p.h. This sufficed to confirm general opinion that the B.R.M. was not yet ready to race, and that it would be necessary to base all the Grandes Epreuves on Formula II. In consequence, during the whole of 1952 and 1953, Formula I racing was degraded to minor events on the International Calendar, most of them run over short distances.

In 1952 Ferrari was unchallenged. The Turin race was followed by Albi, where two B.R.M.s started. One, driven by Fangio, made fastest lap at 114.58 m.p.h. in practice, Gonzalez made a record race lap at 106.97 m.p.h. and both cars led the field for the first five laps. But at this point Gonzalez retired with engine trouble, Fangio following with the same difficulty on the sixteenth lap, leaving Rosier to win on a 4½-litre Ferrari at 101.9 m.p.h. for 188 miles. In the following events of the season a 4½-litre Ferrari, modified by Mr. A. G. Vandervell, the bearing manufacturer, and called the " Thin-Wall Special " made fastest lap and won a 252-mile race in Northern Ireland on the Dundrod circuit, the car being driven by Taruffi. The same car and the same driver won a 100-mile *formule libre* race at Silverstone on July 19th, with a works Ferrari, driven by Villoresi in second place, and on August 4th this works model won a 200-mile race at Boreham, other Ferraris being second and fourth, with a 4½-litre Talbot third. The two B.R.M.s entered in all of these events retired with various mechanical troubles, or spun off the road but, at Silverstone, Gonzalez tied with Taruffi with a record lap at 96.67 m.p.h.

On August 23rd, at Turnberry, the B.R.M. secured a first win of the season (and the second of its career), gearbox trouble in the Thin-Wall Ferrari giving Parnell a 10-seconds lead over Gaze driving a pre-war 2.9-litre Maserati. On September 27th, at Goodwood, however, a full team of B.R.M.s was brought to the line for the first time to run over fifteen laps of a 2.4-mile circuit. Here the cars had a 1, 2, 3 finish, Gonzalez winning and Parnell breaking the course record at 90.38 m.p.h. This impressive performance was somewhat tarnished when a single car, entered for the last meeting of the season at Charterhall, was beaten by a 2-litre E.R.A. of 1937 construction.

But during 1952 the B.R.M. was at least becoming a reliable as well as a fast car, and during the winter of 1952-3 the assets of B.R.M. were taken over by Mr. A. G. B. Owen. For 1953 the cars were entered for all possible events under this new sponsorship but, with one exception, Ferrari wholly withdrew from the Formula I field, and indeed only one race under this rating was held outside the British Isles.

This was at Albi, on May 31st, in which three B.R.M.s, driven by Fangio, Gonzalez and Wharton, were opposed by Ascari on a works Ferrari, and Farina on the Thin-Wall Special, the latter now considerably modified from the original design.

The race was run in a 50-mile heat and a 100-mile final, and by the third lap of the heat the B.R.M.s were in the first three positions and the works Ferrari had retired with a broken gearbox. Farina's car also broke down before the finish. The final opened with the B.R.M.s demonstrating complete superiority of speed, but on the thirteenth lap Wharton had trouble which resulted in the car leaving the road and overturning, and the other members of the team were delayed by tyre failures. This led to the withdrawal of Fangio owing to a damaged hub and Gonzalez, although catching up, finished 30 seconds behind Rosier on a privately owned 4½-litre Ferrari. During the race Fangio lapped at 115.57 m.p.h. which broke all previous records.

Earlier in the year Wharton beat Taruffi on the Thin-Wall at Goodwood (March 6th) and later the same driver and car won at Charterhall (August 15th).

At last, and some five years after the design had left the drawing board, the B.R.M.s had established real mechanical reliability, although they still suffered from overweight and the characteristics of the centrifugal blower made them difficult to drive, especially if wheelspin was allowed to develop. Mainly for these reasons the full team of B.R.M.s was twice beaten by the lighter, if less powerful, Thin-Wall Special. At Silverstone in a 50-mile race the Thin-Wall was the only car to achieve a 100 m.p.h. lap which it did during the race itself. Although not quite equalling the speed of the works 4½-litre Ferrari on the same circuit in 1951 there had been small changes in the intervening two years which had made the course appreciably slower so that the 100.16 of Farina in 1953 probably equalled about 103 m.p.h. in 1951. The highest speed of the B.R.M. was 99.41 m.p.h. or the equal of about 102 m.p.h. in 1951. Over the 50 miles the Ferrari had a margin of 11 seconds, but this does not take account of the fact that for the last 15 miles it was deliberately being driven slower than the B.R.M. in view of the considerable lead it had built up.

The Thin-Wall confirmed its superiority at Goodwood on September 26th, when Hawthorn raised the lap record to 94.53 m.p.h. and beat a B.R.M. by 23 seconds in 36 miles.

This was the last contest between the supercharged 1½-litre type of car and the unblown 4½-litre within the legal limit of Formula I. It is unfortunate that during the last two years of the Formula the cars did not appear on any of the classic courses, and it may well be thought that racing under this rating rule ended " not with a bang but with a whimper " A more correct perspective will be gained by agreeing that Formula I ended, in fact, on the date at which it was originally intended to expire - that is to say, December 31st, 1951. We shall then see that it served its purpose admirably by bringing together in the immediate post-war period of 1947-8 a miscellaneous collection of racing cars of basically pre-war design, amongst which the Type 158 Alfa Romeo predominated, with intervention from Maserati and the unsupercharged Talbot.

During 1949, in the absence of Alfa Romeo, Maserati and Talbot competed on very level terms, but after a year of absence from racing, and of intensive development, the works Alfa Romeos carried all before them in 1950. At the end of 1950 they were, however, successfully challenged by the twelve-cylinder, unsupercharged 4½-litre Ferrari, and although in 1951 the supercharged cars retained the world's championship title which they had gained previously in 1947, 1948 and 1950 they did so by the perilously small margin of four wins compared to Ferrari's three. The competition between these two makes in 1950 and 1951 brought lap and race speeds up to a level comparable with those achieved by the 500 and 600 h.p. cars of the immediate pre-war period. There was, therefore, a general feeling that the adoption of Formula II as the basic Grand Prix rating for 1951 and 1952 would lead to a very obvious reduction in speeds and a corresponding loss of spectator appeal. The events run under this Formula will be considered in the next chapter, but it is only fitting to end this review of Formula I with a summary of the astonishing racing record of the Type 158 and 159 Alfa Romeo cars in the four seasons in which they competed. In this period the company made ninety-nine separate entries in thirty-five races. Of these they won all but four, so that they had thirty-one victories together with nineteen second places and fifteen thirds. They made fastest lap in twenty-three of the races and suffered only twenty-eight retirements. The highest standard of reliability was reached in 1947 with no retirements from an entry of eighteen cars which covered in all 3,093 racing miles. The worst, as one might expect, was eight retirements out of thirty-four cars run over 5,478 miles in 1951. Taking into account retirements, the cars raced a total of 18,153 miles under Formula I (plus 854 miles in 1946)-an average of 6,800 racing miles per car for an overall reliability factor of 81 per cent. This is a record of reliability and success without parallel in motor-racing history.

CHAPTER TWO

The Mastery of Modena

RACING STATISTICS 1952-3

Date	*Event*	*Circuit*	*Driver*	*Car*	*Winning average Speed*	*Lap Speed m.p.h.*
12/ 4/ 52	Pau G.P.	Pau	A. Ascari	Ferrari	56.48	—
10/5/52	B.RD.C.	Silverstone	L. Macklin	H.W.M.	85.41	
			R. Fischer	Ferrari	—	89.29
18/5/52	Swiss G.P.	Berne	P. Taruffi	Ferrari	92.78	
			G. Farina	Ferrari	—	97.19 (P)
25/5/52	Eifelrennen	Nürburg Ring	R. Fischer	Ferrari	77.25	—
22/6/52	European G.P.	Spa	A. Ascari	Ferrari	103.13	114.03(P)
29/6/52	Rheims G.P.	Modified Rheims	J. Behra	Gordini	105.33	
			A. Ascari	Ferrari	—	110.04(P
6/7/52	A.C.F. G.P.	Rouen	A. Ascari	Ferrari	80.14	84.63 (P)
19/7/52	British G.P.	Silverstone	A. Ascari	Ferrari	90.92	95.79 (P)
3/8/52	German G.P.	Nürburg Ring	A. Ascari	Ferrari	82.21	84.4
17/8/52	Dutch G.P.	Zandvoort	A. Ascari	Ferrari	81.15	92.4 (P
7/9/52	Italian G.P.	Monza	A. Ascari	Ferrari	109.8	112.04 (P)
6/4/53	Pau G.P.	Pau	A. Ascari	Ferrari	60.5	62.5*
9/5/53	B.R.D.C.	Silverstone	M. Hawthorn	Ferrari	92.29	94.93
31/5/53	Eifelrennen	Nürburg Ring	E. de Graffenried	Maserati	70.24	—
7/6/53	Dutch G.P.	Zandvoort	A. Ascari	Ferrari	81.04	84.42 (P)
21/6/53	Belgian G.P.	Spa	A. Ascari	Ferrari	112.47	
			J. M. Fangio	Maserati	—	117.3 (P)
5/7/53	A.C.F. G.P.	New Rheims	M. Hawthorn	Ferrari	113.65	
			J. M. Fangio	Maserati	—	15.91
18/7/53	British G.P.	Silverstone	A. Ascari	Ferrari	92.97	97.57 (P)
2/8/53	German G.P.	Nürburg Ring	G. Farina	Ferrari	83.89	—
			A. Ascari	Ferrari	—	85.62
23/8/53	Swiss G.P.	Berne	A. Ascari	Ferrari	97.17	
			J.M. Fangio	Maserati	—	101,72 (P)
13/9/53	Italian G.P.	Monza	J.M. Fangio	Maserati	110.69	—
			A. Ascari	Ferrari	—	114.86 (P)

THE agreement to use Formula II in the Grand Prix racing of 1952-3 followed decisions taken by the F.I.A. five years previously. From the earliest days of International motor racing comparatively few works-supported events run under the Grand Prix regulations have been supplemented by a large number of minor events attracting skilled amateurs, and the less skilled professionals, driving cars of comparatively low engine output. Thus in 1910-3 there were races for 3-litre cars developing about 90 h.p. and from 1921 until 1938 a large number of races were held for cars of 1½-litre capacity, giving at first about 55 b.h.p. unsupercharged and just before World War II approximately 200 b.h.p. in supercharged form.

The International Racing regulations which made supercharged 1½-litre cars the full Grand Prix type produced, therefore, the historical necessity for a supplementary rating governing cars of lesser power and speed. It was agreed that from 1948 onwards there should be a Formula II for cars having engines of not more than 500 c.c. if fitted with superchargers, or 2 litres if unsupercharged, the expectation being that this would limit power to 100 and 125 b.h.p. A number of new designs were introduced to run under this rating.

Gordini, working in conjunction with Simca in France, built some very small and light cars using basically an 1,100 c.c. Fiat engine which was, however, enlarged to 1,490 c.c. A similar type of engine was used by Dusio in the Turin-constructed Cisitalia, which was the first post-war car to use a space-type frame made up of a large number of small diameter steel tubes. On these cars the engines were enlarged to 1.3 litres. In England the H.W.M. appeared with a four-cylinder, 2-litre Alta engine built into a chassis which was based on production car parts, including Standard suspension units, Citroen steering gear and a pre-selector epicyclic gearbox. Constructed in the first year as two-seaters, the cars were in 1949 changed to single seaters and in due course ran with normal gearboxes, a de Dion axle with inboard brakes and a space-type frame. Connaught also used a four-cylinder engine based on a production-type Lea Francis with inclined overhead valves operated by push-rods.

All these cars, which used modified production-type components, had to compete against a specialised design sponsored by Enzo Ferrari, which had a 2-litre, twelve-cylinder power unit which could be run at about 7,500 r.p.m. or about 2,000 r.p.m. more than the four-cylinder engines which opposed it. With over 150 b.h.p. transmitted through a five-speed gearbox it is surprising Ferrari were ever challenged for first place, but, in fact, during the first season of racing in 1948 they were beaten by a Simca at Perpignan, by a Cisitalia at Mantua, and by an 1,100 c.c. OSCA at Naples. In 1949 the Ferrari appeared in a new short chassis with independent rear suspension and during this year a works-entered Ferrari was beaten but once (by a Simca at Lausanne) and won six events, in each of which it made also the fastest lap. In 1950 the cars were revised again, using a longer wheelbase chassis and a de Dion type rear axle with engine output raised to about 170 b.h.p. In this season again they were beaten but once (again by a Simca, now at Geneva) and once failed to make the fastest lap, when this was put up by an H.W.M. driven by Moss on the Caracalla circuit at Rome.

Some idea of the speed of the cars at this time can be had from a lap at 101.41 on the Rheims circuit, which compares with the 99.5 m.p.h. put up by the 2.65-litre supercharged Alfa Romeo in 1932.

In 1951 Ferrari again won all the important Formula II races, but Simca took first place in four minor events and H.W.M. also were placed in some of the Continental races. It was late in this year that Lampredi, who had succeeded Colombo as Chief Engineer of Ferrari, designed and built within 100 days the four-cylinder " over-square " Ferrari engine which dominated Grand Prix racing in the two succeeding years, as will now be described in some greater detail.

When first put on the test-bed this engine gave about 160 b.h.p. and by the end of 1952 this had been brought up to between 180 and 190 b.h.p. Considerably lighter than the twelve-cylinder power unit and with better torque in the low-speed range this big-bore four was challenged by a number of new cars seeking honours in the interregnum before the new Grand Prix Formula of 2½ litres determined for 1954 and onwards came into being.

The fastest and most powerful of these rivals was a six-cylinder, two overhead camshaft Maserati ; the lightest, and most immediately competitive, a six-cylinder Gordini. The fastest British car was the established Connaught, but new designs came from Cooper and E.R.A., both of whom used the six-cylinder, long-stroke Bristol engine which had been developed from the pre-war 328 B.M.W.

The technical details and comparative speeds of these vehicles are set out in another chapter. The race results of the years 1952 and 1953 are an almost monotonous catalogue of first place for Ferrari, with Ascari at the wheel and he was world champion in both years. Alberto Ascari is the son of the 1925 world champion, and he commenced his 1952 successes early in the year with a win in Syracuse on March 16th. On April 14th the Bristol-engined Cooper made a sensational first appearance on the Goodwood circuit, putting in a lap at 87.28 m.p.h. in the hands of an almost unknown driver, Mike Hawthorn, who was to achieve world fame within a year of his first appearance in a modern car. During the same week-end Ascari won at Pau and a fortnight afterwards he won again at Marseilles, with the new six-cylinder Gordini, driven by Manzon, in second place.

The B.R.D.C. Silverstone meeting at the beginning of May attracted two privately owned Ferraris and two works Gordinis, all of which were beaten by Macklin in the H.W.M., and in the Swiss Grand Prix in the same month Ferraris were first and second, with the Gordini third. In the European Grand Prix, held in the rain, Ascari again won with Farina's Ferrari second, a Gordini third and Hawthorn, on the Cooper, in fourth place.

A week later Ferrari suffered their one defeat of the year on the very fast Rheims circuit, being beaten by a Gordini after both Ascari and Villoresi had retired with mechanical trouble. In practice Ascari had lapped at 110.04 m.p.h. and the Gordini at 109.6 m.p.h., but these speeds cannot be compared with any previous lap times as the course was modified for 1952 by eliminating one of the slowest corners.

During July the Ferrari team took the first three places in the A.C.F. Grand Prix run on a new circuit at Rouen, and were first and second in the British Grand Prix with Hawthorn third, a long way behind, on his Cooper. In this race Poore might well have taken third place (which he held for a long period) if alcohol fumes had not rendered him semi-conscious for the last few laps of the race. In August Ferrari took command of the German Grand Prix with the first four places, followed by the first three in the Dutch Grand Prix with Hawthorn, on the Cooper, again the most successful of the rival makes. Finally, in September, came the first hint of a serious challenge in the form of developed Maseratis which had higher power output than the Ferraris, giving them better acceleration and greater maximum speed. But with comparatively inadequate brakes and the retention of a rigid rear axle they were not able to break the Ferrari sequence of victories, although Gonzalez led until he stopped for fuel; the Ferraris with larger tanks and a better consumption were able to run through non-stop. At a minor meeting at Modena, held a week later, Gonzalez chased Villoresi home at a distance of a car's length and put in the fastest lap.

It had been generally feared that the lower power of the Formula II cars would reduce certain speeds to such an extent that Formula II racing would appear but a pale shadow of the dramatic struggles which had been witnessed in the past two years under Formula I. A study of the lap speeds put up during the year show that on the faster circuits there was indeed a very material reduction, the loss at Monza, for example, being over ten miles an hour. But on the slower circuits there was little significant change and, on average, the cars had to be driven for over 50 miles before they lost a minute compared with their twice as powerful predecessors.

The 1953 season began with yet another Ferrari-cum-Ascari victory, this time in the minor event at Pau, followed a month later by a win for his new team-mate Hawthorn in the Silverstone race organised by the B.R.D.C. The Dutch Grand Prix was the first of the Grandes Epreuves on the calendar and the drivers were seriously distressed by a remade road which left a very slippery surface which only Villoresi could disregard. In practice, Fangio on a Maserati was little slower than Ascari, but he had mechanical trouble in the race and the Ferraris finished first and second with a Maserati one lap behind. In the Belgian Grand Prix Fangio put up the fastest lap in practice, beating Ascari by two seconds, Farina by four seconds and Villoresi by seven seconds. Moreover, in the race itself, Ascari was forty-nine seconds behind the Maserati on the ninth lap which seemed to show that as a design the Ferrari had at least met its match. However, Gonzalez' car, running second, broke down on the eleventh lap and Fangio's car disintegrated two laps later.

The inter-Italian battle was renewed with even greater intensity and over the full race distance, in the A.C.F. Grand Prix, now returned to the traditional Rheims circuit.

Once more the course had been modified to make it faster so that no useful comparisons can be made with previous years. Practice showed that the Ferrari and the Maserati were matched within 0.3 of a second and in the stress of the race Fangio actually put up a higher speed in the race than anything achieved in practice. The Maserati team played a cunning tactical game by sending off Gonzalez with his fuel tanks half full in order to lead from the start, which he succeeded in doing from the first to the twenty-ninth lap. From that point onwards Fangio took the lead challenged only, and surprisingly, by Hawthorn's Ferrari, who came up to a neck and neck struggle almost unique in the annals of motor-racing history. For example, on laps 32, 33 and 34 Hawthorn led by half a car's length, only to be passed by the same margin by Fangio on laps 35 and 36. Finally, however, Fangio, with weakening brakes and a loss of his second speed, had to concede victory by a mere second after a titanic struggle which had lasted for 22 hours. The average speeds for the race were : Hawthorn on the Ferrari, 113.65 ; Fangio on the Maserati, 113.64 m.p.h.

Interestingly enough, the season ended with a re-enactment of this struggle but with different drivers and a different ending. In the Italian Grand Prix at Monza, Ascari and Farina on Ferraris ran wheel to wheel with Fangio and Marimon on Maseratis after practice had shown the two cars were of equal speed within ½ second per lap. During this race the lead changed twenty-two times and throughout the whole 312 miles there was never as much as 2 seconds between the first and second cars. At half distance Ascari's Ferrari led Fangio's Maserati by 0.3 seconds, which was increased to 1 second with only five laps to go. Then on the last corner of the last lap Ascari got out of control when overtaking a slower car and Fangio got by to beat Farina's Ferrari by 1.4 seconds. On this occasion the relative average speeds were : Maserati 110.69, Ferrari 110.67 m.p.h.

Between these two epic events Ascari won the British Grand Prix with two of his team second and third after Gonzalez, who had been running second with the Maserati, had been called in to the pits to investigate a leaking oil tank. In the German Grand Prix Ascari lost a wheel, and although he motored to the pits on a front brake drum and later changed cars with Villoresi, it was Farina who won the event. In the Swiss Grand Prix, however, Ascari became 1953 world champion and was never seriously pressed by the Maserati, although Fangio had made a slightly better time in practice. But, as in Germany, Ascari had trouble during the run, as he had to call at the pits to adjust a magneto which had moved to the full retard position. When this had been attended to he was in fourth place with only fifteen laps to go, but driving with true mastery, he passed successively Hawthorn, Marimon and Farina to win by 73 seconds.

As one might imagine, the 1953 cars were sensibly faster than the 1952 models and the year was indeed notable for the fact that, aided by non-stop runs, finishing speeds over the full distance were higher than the records established by the 600 b.h.p. 1937 Grand Prix cars on the circuits of the Nürburg Ring and Pau and superior to the 485 b.h.p. 1939 cars on these two courses and at Berne.

CHAPTER THREE

Carried Forward

IN the four seasons of motor racing which ended in 1939 only four makes of car were entered for Grand Prix racing, and of these only two makes succeeded in gaining a place in a race of major importance.

This makes a strong contrast with the post-war period in which eight makes were entered, of which five, representing nine types of car, finished in one of the first three places of a Grande Epreuve under Formula I, with eight makes also in the Formula II racing of 1952 and 1953. For this reason it is difficult to pick a single example of a Formula I (and equally of a Formula II) car as a representative of the technique involved under these respective regulations ; indeed, to do so could be misleading to the reader. The next three chapters of this volume will, therefore, contain brief descriptions of the leading makes and types of car involved in post-war Grand Prix racing, and they will be followed by detailed descriptions of the 1½-litre, sixteen-cylinder B.R.M. and the 4½-litre, twelve-cylinder Ferrari as being outstanding examples of engineering development in the alternative types possible in Formula I.

It is proposed to subdivide the Formula I cars into pre-war designs ; cars of new design, and to follow these with a chapter on Formula II cars. This first chapter will be restricted, therefore, to cars of less than 1½ litres capacity supercharged, or under 4½ litres unsupercharged, of which the prototypes were in being before 1939.

ALFA ROMEO TYPE 158/159

INTRODUCTION

This model was designed in 1937 at the request of Enzo Ferrari, who wished to have a 1½-litre model available with which the Scuderia Ferrari could compete in the 1½-litre races of 1938 and subsequently. The engine had the same bore and stroke as the 3-litre V.16 car which was being prepared for the Grand Prix Formula ruling at that time (3 litres supercharged and 4½ litres unsupercharged), and in many details, such as the cylinder-head layout, there was a close resemblance between the two models.

An initial batch of four 1.5-litre cars, which became known as the " Alfettas ", was put through. These were partly assembled by Ferrari at Modena and the engine was given its initial bench testing there, developing in the first instance 190 b.h.p. at 6,500 r.p.m.-the equal of 254 lb./sq. in. b.m.e.p. at 3,000 ft./min. The model made its first appearance on the Leghorn circuit when it won its class in the Coppa Ciano on 31st July and the best lap speed on this occasion was 85.64 m.p.h.

A fortnight later, when running on the Pescara circuit in the Coppa Acerbo, Severi was timed at 139.53 m.p.h., but the staying power of the car was not yet commensurate with its performance, and the whole team was forced to retire not only in this event, but also when running on the Modena circuit on 18th September.

For 1939, extensive modifications, more particularly a change over to a roller bearing crankshaft, were made. As reconstructed, the engine output was raised to 225 b.h.p. at 7,500 r.p.m. (or 260 lb./sq. in. at 3,450 ft./min.) and although beaten by

Mercedes-Benz at Tripoli, the cars had no difficulty in winning the three other events in which they were entered, viz. the Coppa Ciano, Coppa Acerbo, and the 1½-litre class of the Swiss Grand Prix. The best lap speeds of 90.8 m.p.h., 86.5 m.p.h., and 98.39 m.p.h. for the circuits in question. Considerable progress in the development of the car may be seen by comparing its performances on the Tripoli circuit in 1939 when it was defeated, and in 1940 when it won in the absence of Mercedes-Benz due to Germany being at war, Italy at that time remaining neutral. In 1939 the car driven by E. Villoresi into third place averaged 115.3 m.p.h., and the winning Mercedes-Benz averaged 122.9 m.p.h. A year later Farina averaged 126 m.p.h., and the best Alfa Romeo lap was 134 m.p.h., which compares with the best Mercedes-Benz figure of the previous year of 133.5 m.p.h. The post-war performance of the model has been set out in a preceding chapter.

CONSTRUCTION

The following constructional features of the Type 158 Alfa Romeo relate in the first instance to the design in its earliest appearance in Formula I, notes on development up to the end of 1951 being dealt with later.

Engine

The straight-eight engine comprises a light alloy crankcase split on the centre line of the crankshaft with dry sump lubrication. Oil is fed through an external gallery pipe to the seven main bearings and to an eighth outrigger bearing immediately adjacent to the flywheel. The scavenge pump draws oil from the rear end of the crankcase, the base of which is deeply finned, and surplus oil from the blower gears is also drained directly into the back of the sump. The cylinders are bolted on to the top face of the crankcase and consist of two light alloy castings bolted together, each containing four bores into which dry liners are inserted. A train of gears drives accessories and two overhead camshafts from the nose of the engine, also a Roots-type supercharger placed initially in the centre of the engine on the left side of the crankcase and inspiring through an updraught carburetter which feeds mixture directly to a manifold placed directly above it. Two valves per cylinder are used (with a 90-degree included angle), with central position for sparking plugs, and the water offtake is by four risers mounted on top of the cylinder head and placed on the centre line thereof.

The fuel pump is driven from the back end of the inlet camshaft, the oil and water pumps being driven from the front train of gears, as was a single magneto, held down by a strap on to the exhaust side of the camshaft. The water intake pipe is also bolted to the cylinder blocks directly beneath the exhaust ports.

Gearbox

The four-speed gearbox is mounted at the back of the car and is built up into one unit with the final drive which is fixed to the rear cross-member of the frame. Final drive ratios varying between 4 : 1 and 6 : 1 are available, the road speed on the higher ratio being approximately 22.5 m.p.h. per 1,000 r.p.m. Gears are selected by a gate mounted on the left-hand side of the cockpit, the oil tank being placed on the right-hand side thereof.

Rear Axle

Independent suspension on the swing axle system is employed, the wheels being located by a single triangulated arm joined to an inclined pivot so that wheel rise is accompanied by toe-in.

Rear Suspension

A single transverse spring passes below the main axle housing and is connected by pivot links to the rear hub. Hydraulic dampers of the direct-acting telescopic type and friction dampers have been used.

Front Suspension

At the front of the car, also, a low-mounted transverse leaf spring is connected to the wheel hubs which are located by two trailing arms. These terminate in pin joints so as to provide the required vertical and angular motion on the wheels.

Steering Gear

A worm and wheel gear is mounted directly above the clutch housing, a push-pull rod extending forwards beneath the exhaust system to a bell crank mounted on the front cross-member. The track-rods are split into two of equal length and are inclined slightly backwards.

Frame

The frame consists of two parallel rectangular section tubes mounted about 18 inches apart and joined by four cross-members.

Brakes

Hydraulic brakes are used.

Body and General Features

The fuel tank is contained in the somewhat long tail, the driver being centrally seated above the propeller shaft. The low-mounted radiator is enclosed by a cowl with an opening having the general proportions of a three-leaf clover, the air intake being covered by detachable plates to meet varying climatic conditions.

The obligatory driving mirrors are placed on the instrument panel within the body contour, and there have been alterations in the exhaust system between one single pipe and two pipes each fed from four cylinders. In each case the exhaust piping beneath the bonnet has been isolated by light alloy shields above and below it so as to protect the magneto from excessive heat and to maintain reasonable under-bonnet temperatures.

Dimensions

Wheelbase, 8 ft. 2½ in. ; Front and Rear track, 4 ft. 2 in.

DEVELOPMENT

Although the Type 158 was not dimensionally changed between 1947 and 1951, the engine output was very greatly enlarged (mainly as a consequence of a substantial rise in manifold pressure), and there have also been considerable changes in the chassis units. The engine output when the cars appeared in the immediate post-war racing of 1946 was 254 b.h.p. at 7,500 r.p.m., this representing a b.m.e.p. of 294 lb./sq. in. at 3,450 ft./min. However, as early as July, 1946, a car made its appearance with two-stage supercharging. This was contrived by placing an enlarged first-stage blower behind the original central blower, the first-stage component drawing mixture from a triple-choke downdraught Weber carburetter and feeding, through an inter-connecting pipe, into an updraught inlet port on the second stage. During 1947 the Type 158/47 was developed but not raced, but this model, having a larger primary blower and an output of 310 b.h.p. at 7,500 r.p.m. (358 lb./sq. in. b.m.e.p.), was used in practice for the Grand Prix de l’A.C.F. in July, 1948, and in 1948 events.

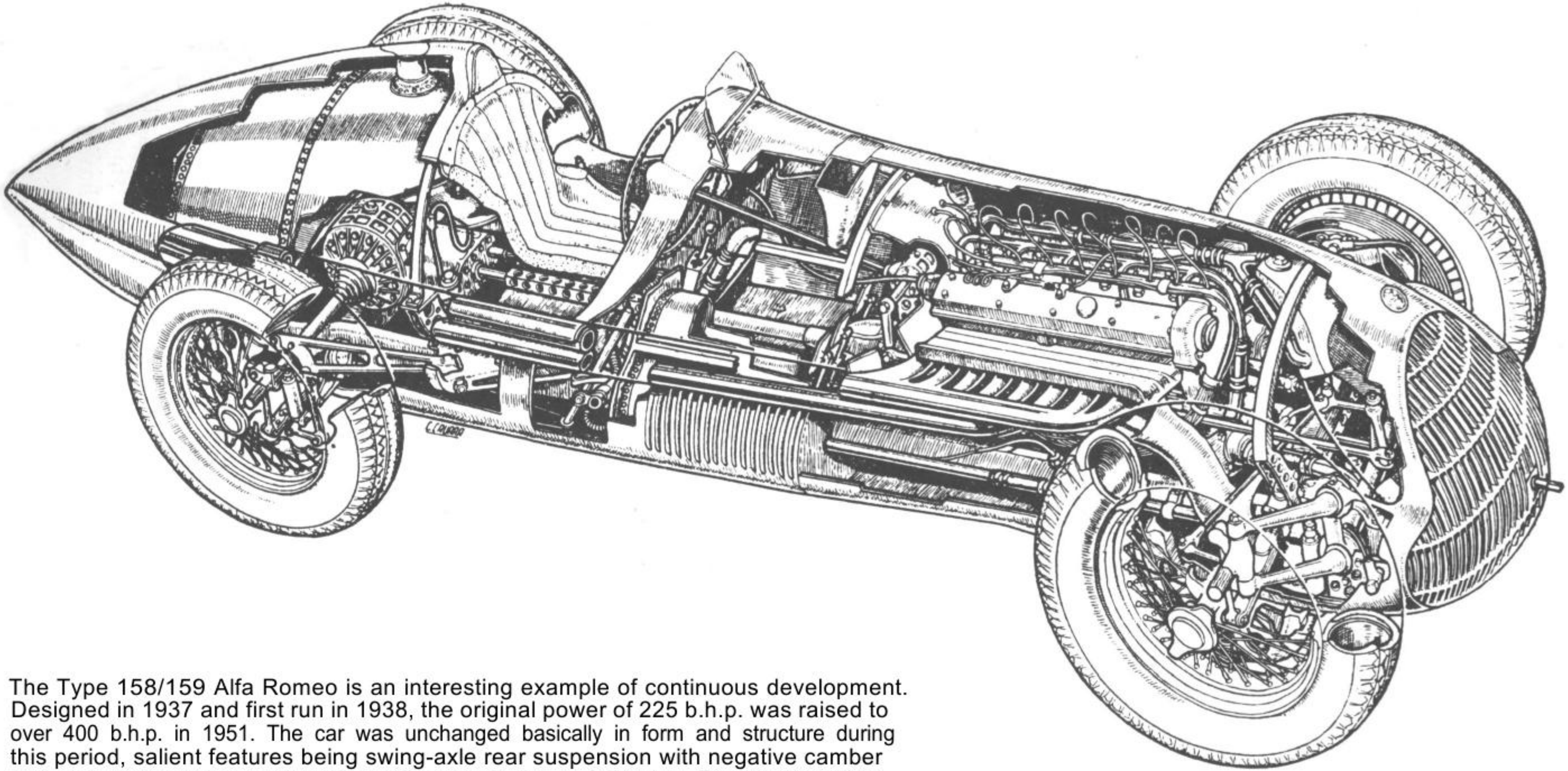

The Type 158/159 Alfa Romeo is an interesting example of continuous development. Designed in 1937 and first run in 1938, the original power of 225 b.h.p. was raised to over 400 b.h.p. in 1951. The car was unchanged basically in form and structure during this period, salient features being swing-axle rear suspension with negative camber and a neutral position, and toe-in as the wheels rise to full bump. Front suspension is by trailing arms, transverse leaf springs being used fore and aft. As shown in this drawing the exhaust manifold of the eight-cylinder engine was isolated and fed with cold air ; on the intake side three down-draught carburetters feed two roots blowers giving two stages of compression. In 1951 the air to these blowers was drawn from the scuttle intake. In this year also supplementary fuel tanks were placed within the cockpit, the road consumption having degenerated to approximately 1½ m.p.g. owing to the necessity for using fuel as an internal coolant.

Air was ducted to the downdraught carburetters by a forward-facing trunk, this at first extending to about mid-point of the engine and on later models being carried forward to just behind the front spring. The exhaust system at first had a single discharge pipe but on later models the centre four cylinders and the two end pairs discharged into separate pipes.

After lying idle in 1949, detail changes in 1950 raised the output to 350 b.h.p. at 8,500 r.p.m. and even further development work was carried out during the winter of 1950-l.

In April, 1951, it was made known that an engine with even higher boost had been run upon the test-bed at 10,500 r.p.m. (4,750 ft./min.) developing 404 b.h.p. (345 lb./sq. in. b.m.e.p.) and 385 b.h.p. had been obtained at 9,500 r.p.m., viz. 352 lb./sq. in. b.m.e.p. at 4,300 ft./min. In view of this major increase, and in conjunction with certain chassis changes which are mentioned separately, this model was given the Type number 159 .

Despite the shielding previously provided between the exhaust pipe and the magneto the latter was redisposed in a cooler place and driven from the front end of the inlet camshaft, whilst an interesting and significant revision of the water circulation was effected in 1947. The four offtake pipes, placed on the centre line of the head and between numbers 1 and 2 ; 3 and 4 ; 5 and 6 ; and 7 and 8 cylinder bores, were supplemented by four down pipes feeding high velocity cold water into the head immediately above the exhaust ports of cylinders numbers 2, 4, 6 and 8.

Reliance was placed increasingly upon internal cooling provided by the use of very rich mixtures of alcohol fuel having good values for latent heat, and of very large angles of valve overlap, to a point where this phase of the engine's operation was referred to in the Milan Design Department as a cooling " fifth stroke " As a direct consequence, fuel consumption fell to less than 1.5 m.p.g.

Turning now to chassis development, the rate of the front and rear springs was lowered with the introduction of the Type 158/47 and the fully developed Type 159 embodied a de Dion axle at the rear, this being adapted to the existing hubs, double-jointed half-shafts being provided on each side of the final drive.

Before this the spring links were arranged to place the half-shafts at a marked dihedral angle, the rear wheels thereby being given a marked inward inclination from bottom to top. For reasons which will be considered in a later chapter this arrangement improved considerably the stability of the cars when cornering.

Owing to the extremely high fuel consumption of the Type 159 a number of cars were built with side fuel tanks ; all the 1951 cars had additional fuel tanks built into the cockpit. The maximum tank capacity on this model was 65 gallons and on its last two appearances in 1951 (Monza and Barcelona) the forward-facing air intake was discarded in favour of a conduit drawing air from an orifice cut in the top of the scuttle, the Type No. 159 A being given to this final variation.

To match the very considerable gains in output, reflected in far higher acceleration and substantially greater maximum speed, the brakes were steadily modified through the years, and an illustration shows the very large diameter and wide brake drums used during the 1951 season.

E.R.A.

E.R.A. racing cars had their genesis in a supercharged, six-cylinder Riley two-seater which was built for the private use of Raymond Mays in hill climbs and short distance events, with the advice of Peter Berthon and T. Murray-Jamieson. The success of this car in 1933 led to a proposal by Humphrey Cook that he would finance a team of single-seater cars which could represent Great Britain in 1½-litre Formula racing. On this basis English Racing Automobiles, Ltd., was founded in 1934 and the vehicles about to be described succeeded in winning five major races in 1935 and 1936, eleven in 1937, six in 1938 and two in 1939, in which year a new but unsuccessful E type was produced to counter the arrival of the Alfa Romeo Type 158 and Maserati 4 CL models. The works produced a total of thirteen cars of A and B Type, characterised by single Roots blower mounted vertically at the front of the engine, semi-elliptic springs, and three C Type models with modified frames, superchargers, and front suspension systems. In the Formula I period only the 1939 model, or E Type, has received works backing, and owing to a large number of detail defects this model was withdrawn from racing in 1949. A number of private owners have, however, continued to race with the earlier A, B and C models which are about to be described.

CONSTRUCTION

The general layout and chassis design of the E.R.A. is highly reminiscent of the 1932-3 single-seater, 3-litre, Italian Grand Prix cars, and this is to some extent explained by the fact that Reid Railton, who was consulting engineer to Whitney Straight's team of Maserati cars in 1932-3, was retained as an advisor on the chassis design of the E.R.A.

Engine

The Riley-derived cylinder block is an iron casting in one with the crankcase and extends considerably below the centre line of the crankshaft. Unusual rigidity is provided by the high modulus of the cast iron itself and also by the box section of the crankcase into which the three-bearing crankshaft is inserted endwise, a Hyatt semi-flexible-type roller being used for the centre bearing. The main structure is also unusual, so far as racing cars are concerned, in using two camshafts, one on each side of the cylinder bores, each driven by a half-time wheel engaging with a gear on the nose of the crankshaft. The crank itself is heavily counter-weighted and nitrided and the rather long parallel section connecting rods have lead-bronze big ends with graphited-bronze main bearings.

In order to keep the engine as compact as possible (the main engine casting is only 18 in. long) the cylinders do not have water spaces between them except above the centre main bearing, and the water jackets are also relatively short, the lower half of the bore projecting into the crankcase and being cooled solely by oil splash. A light alloy casting bolted to the nose of the engine encloses skew and bevel gears driving, respectively, oil pressure and oil scavenge pumps and a vertical two-lobe Roots-type blower of Murray-Jamieson design, drawing air from a single S.U. carburetter.

Mixture is fed through a pipe to individual inlet ports on the right-hand side of the light alloy cylinder head, each combustion space being of the hemispherical type with two inclined valves at 90 degrees. These are operated by the crankcase-mounted camshafts through short push-rods and rockers and the exhaust ports are of square section in order to give the maximum area. The 18 mm. sparking plugs are slightly offset from the centre of the head and masked, and the stiffness of the head as a beam is considerably enhanced by the water riser which is formed at the inlet side as an integral portion of the casting.

A skew gear on the nose of the inlet camshaft drives a vertical magneto and despite the large stroke : bore ratio and the mass of the push-rod valve gear the engine has shown consistent reliability at crankshaft speeds of up to 7,500 r.p.m., the two weak spots being failure of the scavenge pump and breakage of the pistons and/or gudgeon pins.

The general arrangement described was also followed on the C type cars which secured most of the 1937 victories. A major change, however, was the fitting of a horizontal magneto on the platform previously occupied by the Roots blower and the mounting of a Zoller vane type compressor driven by gears from the back of the crankshaft and mounted above the gearbox. As a result of the internal compression and higher efficiency of this component the supercharge pressure was raised from 15 lb. (2 ata.) to 25 lb. (2.7 ata.) with a corresponding increase in engine power to 225 h.p. without increase in r.p.m. or piston speed. These compressors required more careful fitting and assembly than could readily be provided by private owners and for this reason the successful C type models used in Formula I racing have, almost without exception, reverted to the B type layout.

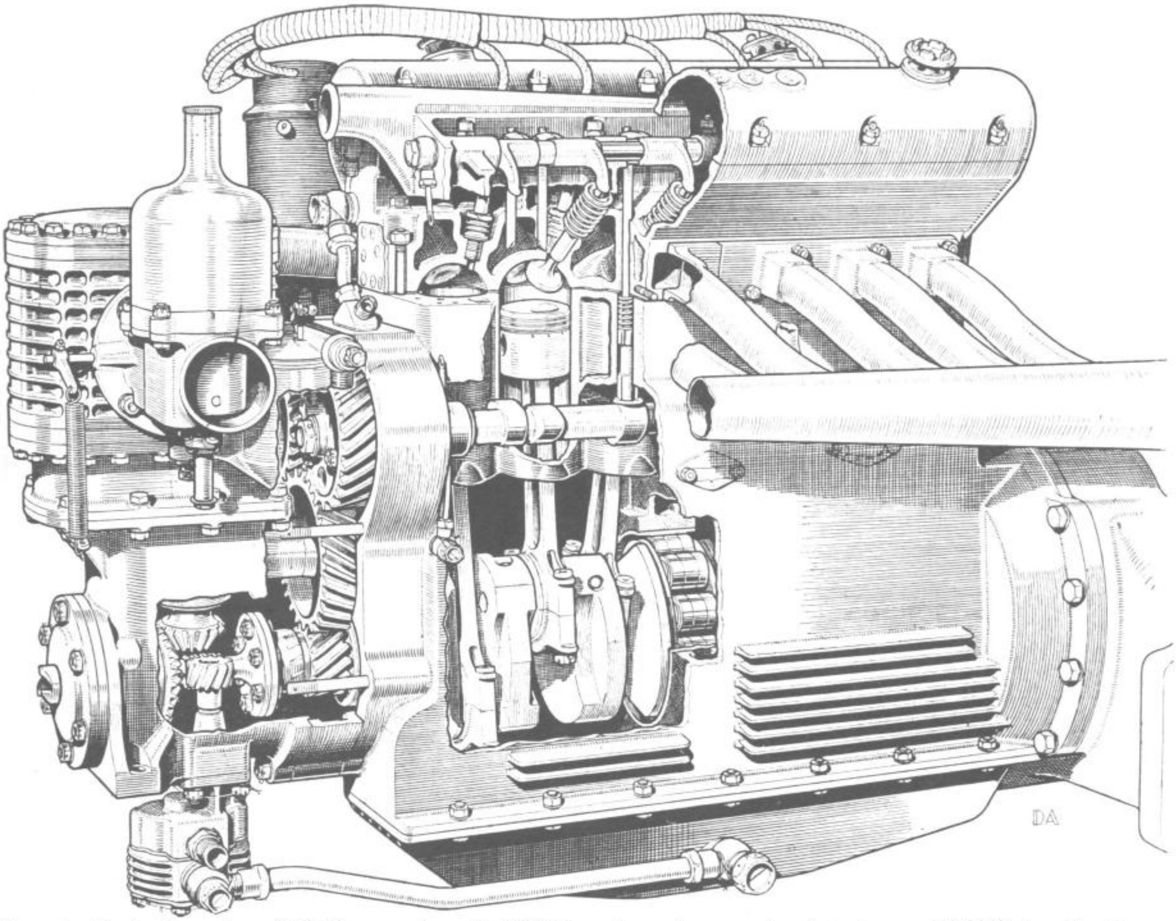

Although dominating the 1½-litre racing of 1935-7 and again prominent between 1947-9 the Roots supercharged E.R.A. engine was a very simple power unit with push-rod operated overhead valves, detachable cylinder head, cast-iron block and crankcase combined, and a three-bearing crankshaft. All of these features are shown in this drawing.

Gearbox

The drive is taken direct, i.e. without the intervention of a normal clutch, to a Wilson type epicyclic gearbox mounted in unit with the engine. The Wilson design has four ratios giving road speeds of 125, 98, 70 and 42 m.p.h. on the A and B types and 140, 117, 97 and 74 m.p.h. on the Zoller C types. The ratio is selected by the contraction of external brake bands on three epicyclic gear trains. It is a particular feature of the layout that the gear about to be required can be pre-selected by the driver simply by moving a lever mounted beneath the steering wheel. The actual engagement of the gear can then be made at any time by depressing what would normally be the clutch pedal. This gives distinct advantage in driving on some circuits, and foolproof and almost instantaneous changes of gear can be made.

Rear Axle

The E.R.A. is one of the few designs which use a torque tube transmission. A single universal joint is placed behind the gearbox, the propeller shaft being enclosed within a tube which is joined to a spherical bearing which absorbs driving and braking torque and also drives the car, and at the other end to a light alloy bevel housing split on the centre line of the car. Although not forming part of the original specification (except on C types), nearly all the cars running in Formula I have been converted to include a Z.F. Type limited slip differential.

Rear Suspension

Rather short semi-elliptic springs shackled at both ends are mounted on outriggers from the frame.

Front Suspension

On A and B models short semi-elliptic springs are shackled at each end and a rigid front axle beam located by a radius rod is bolted to them. On the C type cars Porsche trailing arms are used with torsion bars running side by side in a tubular cross-member.

Steering Gear

A worm and wheel gear is used and on the C type model the push-pull rod is connected to a bell crank mounted on the nose of the car, to which are fixed two half-track rods joined to the steering arm on the front hub.

Frame

A and B type models have channel type frames with somewhat exiguous cross-members, but the stiffness of the C type frames was increased somewhat by the use of box section, two tubular cross-members being mounted immediately above and behind the radiator with a small diameter tube beneath the driver's seat and another below the fuel tank.

Brakes

A and B type cars had Girling brakes of mechanical type in which tension rods are used to expand the shoes through the medium of a wedge and rollers. C type cars were fitted with Lockheed hydraulic brakes of two leading shoe type, and a number of earlier models running in Formula I racing have also been converted to full hydraulic brake systems.

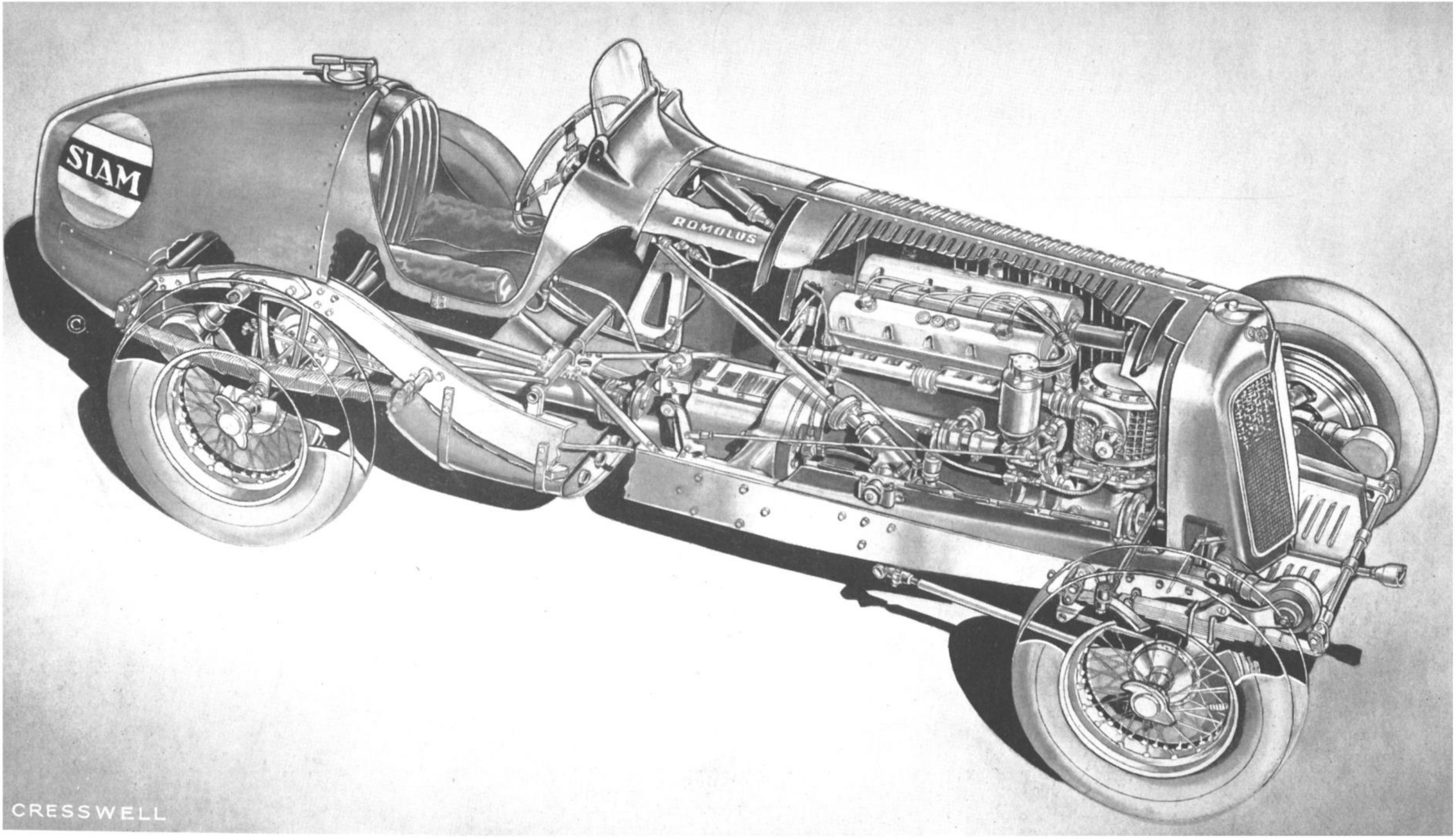

PLATE 1

The B Type I½-litre E.R.A. was one of the most successful racing cars of its class in the period 1934-9 and the car shown here was the most successful B Type made. Features which are clearly shown include the short front and rear springs, light cross bracing to the channel frame and the offsetting of the steering box in relation to the steering wheel. The drawing also shows how the six-cylinder engine had a Roots-type blower mounted vertically on the nose of the crankcase and transmitted power without an intermediate clutch to the gear bands of the Wilson epicyclic gearbox. Torque tube drive was employed for the rear axle.

Body and General Features

When the E.R.A. was originally designed considerable thought was given to performance in sprints and in hill climbs. The improved weight transfer from front to rear and the importance of driver visibility in this class of event were partly responsible for the decision to use a central driving position which was, of necessity, somewhat highly mounted in order to give clearance for the torque tube which moved beneath it. No effort can be seen on the original design to reduce the drag except to keep the cross-sectional area as low as possible in view of the seating position chosen, and the tail is as short as it can be made consistent with enclosing the fuel tank.

Dimensions (C Type)

Wheelbase 8 ft. ; track 4 ft. 4½ in. front, 4 ft. rear.

DEVELOPMENT

Detail refinements in the engine have permitted in some cases a slight increase in engine h.p., which may have gone up to 190 b.h.p. at 7,500 r.p.m. in individual cases. In the main, however, attention has been given to improving the road-holding of the cars, both by the location of improved hydraulic dampers on the beam front axles of the A and B types, and the use of external radius arms to locate the rear axle.

The E Type

It may be appropriate in this section to give some information regarding the E type E.R.A. This was designed in 1938, and was a complete and, as events have proved, not very successful breakaway from the previous models. The basis of the three-bearing crankshaft and an iron crankcase-cum-cylinder block was retained, but the bore was enlarged to 63 mm. and the stroke reduced to 80.5 mm. with a corresponding reduction in piston speed. The iron casting ended on the centre line of the crankshaft and a steel strap was used to retain the centre bearing, a deep light alloy sump replacing the dry sump lubrication arrangements characteristic of the A, B and C models. The C type Zoller compressor was used, mounted on the right-hand side of the crankcase, and a further detail change was the use of studs in place of bolts to join the halves of the big end which embraced a light alloy shell. The cylinder head and valve gear were little changed from previous types and although the connecting rods on this engine were a definite source of weakness, some very satisfactory bench-test figures were recorded, 260 b.h.p. being reached at 7,000 r.p.m., equivalent to 325 b.m.e.p. at a piston speed of 3,650 ft./min. The output per sq. in. of piston area was 8.97 b.h.p.

Immediately behind the clutch a step-down gear was provided so as to lower the propeller and the driver's seat. The four-speed synchro-mesh gearbox was mounted at the rear of the car and bolted on to the bevel box, the drive including a Z.F. differential. A de Dion type rear axle was used with torsion bar rear springs together with a tubular frame, and Porsche type independent front suspension similar to the C type cars.

In respect of general layout and performance factors, there was no reason why E type E.R.A.s (of which three were made) should not have challenged successfully the Continental Formula I models but, unfortunately, the skill exhibited in the detail design fell considerably short of the imagination shown in broad concept, and despite considerable efforts made by the works under new organisation it was not possible to make the car raceworthy in its original form.

MASERATI

INTRODUCTION

The first Maserati racing car, built in 1926, had a 1½-litre straight-eight engine, and in the ensuing thirteen years a car with an engine of this size was always available from the works, which specialised in the sale of racing cars to private owners. The immediately pre-war 4 CL model was derived directly from the 3-litre 8 CL Type which put up some meritorious performances in the Grand Prix racing of 1938-9. The smaller car, which replaced the 1936-8 six-cylinder model, was beaten by the eight-cylinder Alfa Romeo cars in the races in which they jointly competed during 1939, but it was successful in a number of other events and in this year it was, if not the fastest 1½-litre car, certainly *proxime accessit.*

This Type 4 CL had a box-section frame and the front suspension comprised two wishbones of nearly equal length which, as shown in a drawing, were made of C-section plate, the stub axle being supported in spherical bearings. The upper wishbone engaged with a torsion bar running outside and parallel with the frame. A very large oil tank was placed beneath the driver’s seat and, made from a light alloy casting and four-point mounted, this formed a substantial cross bracing to the chassis at this point.

A number of 4 CL Maseratis ran in immediately post-war racing but the type was modified in 1947 and given the nomenclature 4 CLT, the principal change being the use of a tubular chassis. The Type 4 CLT/48, with which these notes are specifically concerned, was introduced in June, 1948, for the San Remo Grand Prix in which it was victorious. It is frequently referred to as the San Remo model and may be externally distinguished from the preceding type by the lower tubular frame members and the coil type, independent front suspension. It should perhaps be noted that this car was introduced after the Maserati brothers had left the company.

CONSTRUCTION

As the Maserati is specifically designed for racing by private owners, it is characterised by a simple and straightforward layout and in some directions (e.g. the use of two cast-iron cylinder blocks) considerations of cost of construction and maintenance have clearly had precedence over the purely technical desirability of highest performance and/or lowest weight.

Engine

Despite the use of four cylinders only, the piston area of the Maserati is but little less than that of rivals with more cylinders, this following from the use of equal bore and stroke so that at 7,500 r.p.m. the piston speed is only 3,840 ft./min. The engine layout is, so to speak, “ old fashioned ” not solely in respect of the number of cylinders employed, for examination shows that traditional layout has been followed in a number of other respects.

The crankcase proper is formed from two magnesium castings of almost equal depth and the three bronze main bearing shells are held in halves in the upper and lower portions of the crankcase. The halves of the crankcase are in turn joined together by long bolts passing through pillars and, as seen in a drawing, transverse webs are used to give additional stiffness to the assembly. A magnesium alloy oil sump closes the base of the engine, which is notable for exceptional depth despite the use of dry sump lubrication. The crankshaft runs in bronze-backed white metal bearings, the mains and pins being drilled lengthwise to reduce weight, with light alloy plugs inserted to provide oil tightness, the big ends having plain bearings and the babbit being applied directly to the connecting rods. The connecting rods themselves are H-section machined all over, these having replaced the tubular rods which were characteristic of Maserati products for very many years.

The cylinders are formed in pairs from two castings which have open sides to the water jackets (which are later closed by steel plates) and embrace the cylinder heads, each of which contain four valves placed at an included angle of 90 degrees, each inlet and exhaust valve having its own separate port. As each valve has a diameter of 1.575 in. the total inlet valve area of 15.6 in. reaches the remarkable relation to the piston area of 0.525 : 1 and at 260 b.h.p. the flow value is only 16.6 h.p./sq. in.

The valves are closed by coil springs and opened through the medium of followers which replace the inverted pistons used on the earlier cars. Also mounted on the front of the crankcase is the primary blower which is coupled direct to the crankshaft and the smaller second-stage blower (both of the two-lobe Roots type) which lies immediately above it. Both run at engine speed, which accounts for their large bulk in proportion to the delivery ; and they run in opposite directions, the double-choke horizontal Weber carburetter being bolted to the right-hand side of the primary blower, the discharge from the second-stage blower being immediately above it to a large diameter pipe feeding the eight inlet ports. A manifold pressure of 2.6 ata. is used in conjunction with the moderate compression ratio of 6 : 1. The pistons have a strange head shape, in that they are not only domed viewed on the axis of the crankshaft, and have peaks on each side at 90 degrees thereto, the head falling away on each side presumably to give clearance for the valves should they stick in the open position.

The valve timing is simple and conservative, the inlet opening 25 degrees before and the exhaust closing 25 degrees after top dead centre. Similar symmetry is provided with an exhaust opening 55 degrees before and an inlet closing 55 degrees after bottom dead centre.

The water pump and magneto are driven in tandem from the front of the crankshaft and lie immediately beneath the inlet pipe and four riser pipes carry the water back to the header tank of the radiator. An oil cooler is provided immediately behind the main radiator core and oil is circulated into a tank placed beneath the driver's seat, but this is not relied upon, as on the earlier models, to act as a frame stiffener. Ignition is by heavily masked plugs fitted on the centre line of the head.

Gearbox

The four-speed gearbox is bolted to the crankcase and provided with a central ball-type gear lever. The gearbox casing is extensively ribbed and although a variety of ratios is provided the normal stages in relation to the final drive are 1.24 ; 1.69 ; and 2.91 : 1.

Rear Axle

A live rear axle is used with two steel axle tubes bolted on to an alloy casting split on the centre line, which encloses the bevel gears, differential and a step-down gear which lowers the propeller shaft. In the early model cars the propeller shaft was

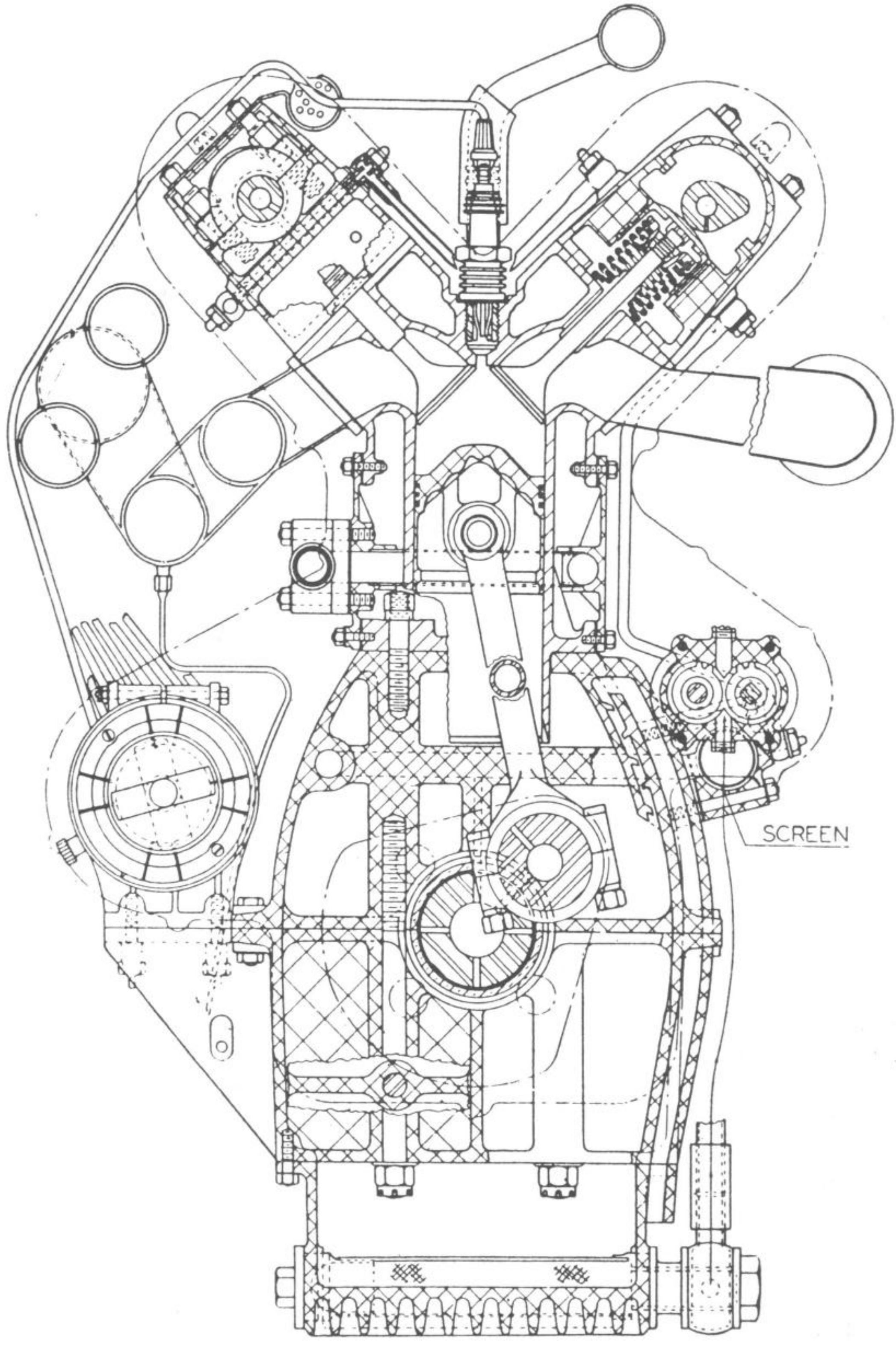

Although modified both in respect of valve gear (which used rocking fingers) and connecting rod design (H-section), the four-cylinder, 1½-litre Maserati cars had the same dimensions and general construction as the eight-cylinder 3-litre models used in Grand Prix racing in 1938 and 1939, of which the above illustration is a cross-section. (Scale 1 : 4.)

itself enclosed in a torque tube with a spherical joint placed behind the gearbox ; on the 4 CLT 48 an open shaft is employed in conjunction with external radius arms pivoted on to the frame and equal in length to the propeller shaft. The rear axle bevels give choices of 5, 4.6, 4.17 : 1 and 3.41 : 1. On the 4.17 ratio, 7,500 r.p.m. is equivalent to a road speed of 149 m.p.h. on top gear and to 120, 83 and 51 m.p.h. on the three indirect ratios.

Rear Suspension

Short quarter-elliptic springs are used at the back of the car, having nine leaves and these are damped by Houdaille vane-type shock absorbers.

Front Suspension

On the 4 CLT 48 model the bottom link of the independent suspension system is of true wishbone form but a single arm is used for top link mounted in very long bearings on each side. A projection of the arm emerges from the front bearing and forms a link with the Houdaille-type damper and the centre of the top arm is developed as a rocker which engages a short open coil spring which acts as the suspension member. The king-pin is mounted between the wishbone arms in which it is supported on spherical bearings.

Steering Gear

A worm and wheel steering box is mounted immediately behind the cylinder block. A shaft extends across the full width of the car carrying two drop arms one on each side. These in turn are linked by push-pull rods to the steering arms so that there is true independent steering of each front wheel without the intervention of a track-rod.

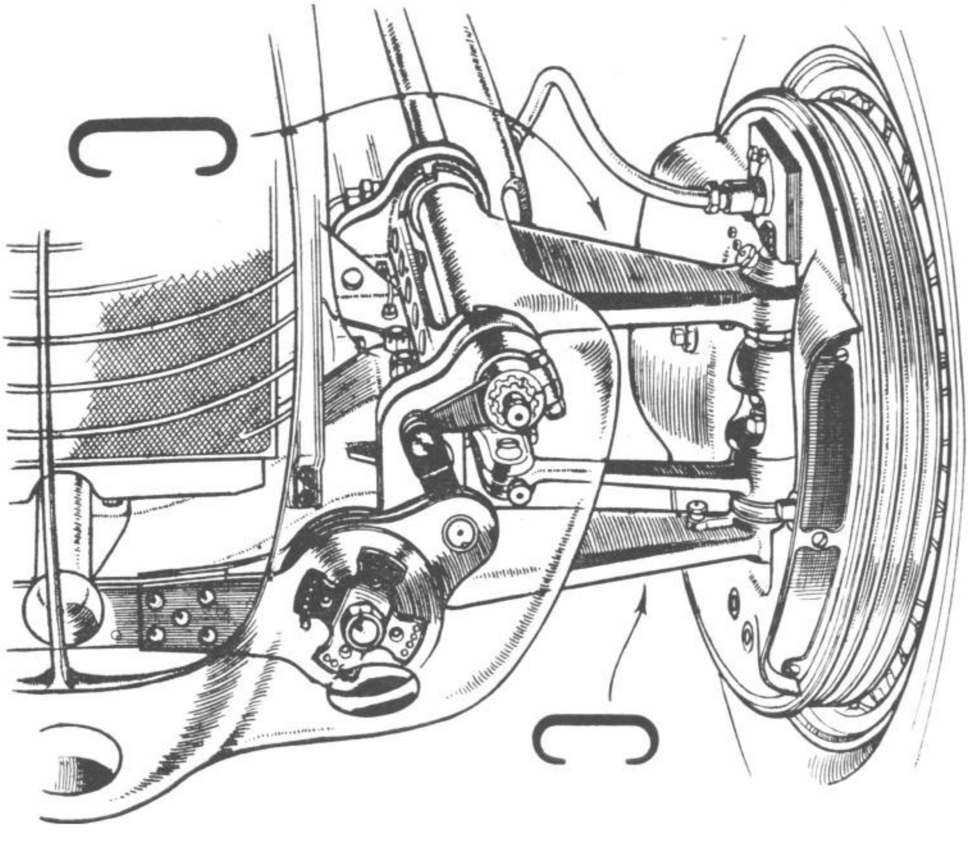

The Type 4 CL Maserati cars used an independent front suspension system in which unequal-length wishbones made out of pressings were joined to a torsion bar running parallel with the frame and embraced (through the medium of ball and socket joints) the front wheel hub and king-pin.

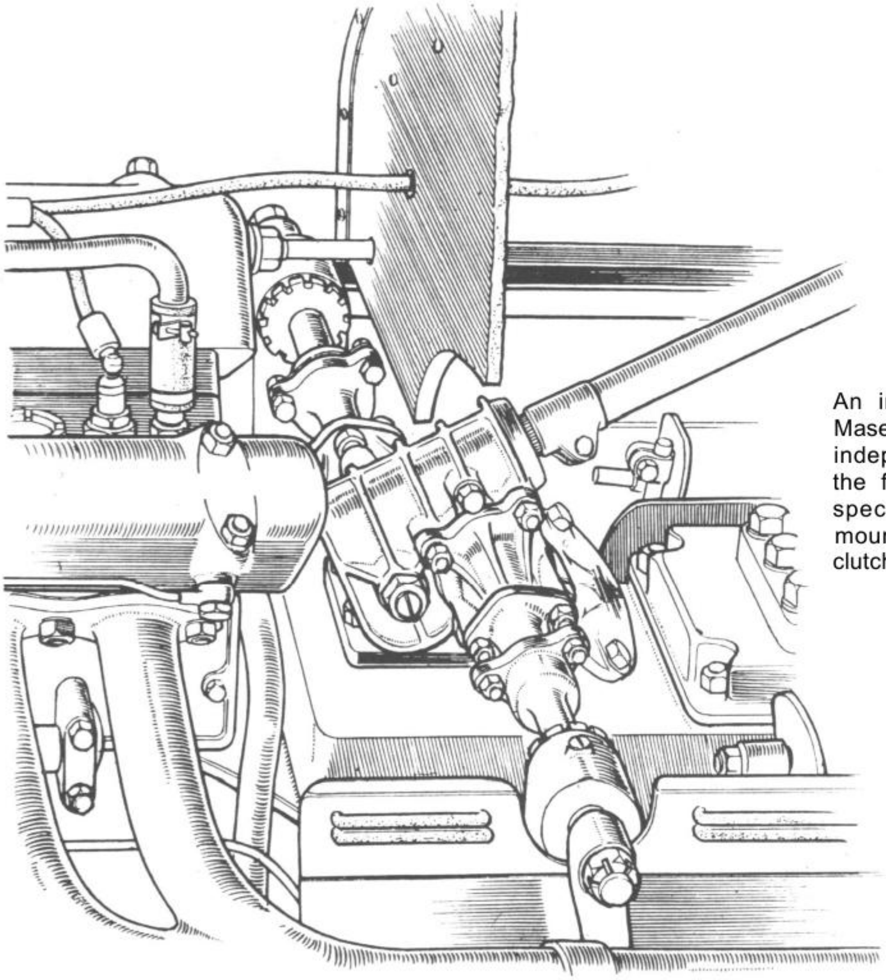

An interesting feature of 1½-litre Maserati cars has been the use of independent steering to each of the front wheels by means of a specially designed steering box mounted immediately above the clutch housing as shown here.

Frame

The side members of the frame are parallel and consist of steel tubes coupled with two large diameter transverse tubes at the extreme nose and adjacent to the rear spring mountings. Stiffness is also increased by two smaller diameter cross-tubes placed just ahead and just behind the crankcase and by two tubes placed in the form of a cross which join the main frame at a point level with the universal joint at the front end, and as near as possible to the rear axle at the back end. The tubes taper inwards and pass below the rear axle, two parallel bars projecting to the extreme rear of the car and giving a support for the fuel tank.

Brakes

Hydraulic brakes are used, the drums containing stiff, light alloy shoes, which do not work on the two leading shoe principle.

Body and General Features

The driver's seat is centrally placed and has to be somewhat high to accommodate the moving propeller shaft, despite the fact that this is lowered by the spur wheels contained in the nose of the axle casing. The radiator cowl has a deep opening and every effort has been made to keep the car down to the minimum dimensions possible in the light of the chassis construction.

Dimensions

Wheelbase 8 ft. 2½ in. ; front track 3 ft. 11½ in. ; rear track 4 ft. 1½ in.

DEVELOPMENT

During 1949 and 1950 efforts were made by some private owners to increase the output of the engine by raising the supercharge pressure, and figures as high as 280 h.p. have been mentioned. An even more ambitious programme was embarked upon by the Scuderia Milano under the direction of Prof. Mario Speluzzi. This embraced revised cylinder block castings giving improved water circulation around the exhaust valves ; a built-up crankshaft permitting one-piece big ends ; larger blowers and manifolds, giving increased supercharge pressures ; and changes in the steering gear providing a single arm at the centre of the car to which two equal-length track-rods could be attached. Unfortunately, although these cars were undoubtedly faster than the standard models, they did not achieve the reliability required to keep them in the forefront of Formula I racing in 1950-1.

CHAPTER FOUR

Post-War Projects and Practice

IT is somewhat astonishing that nearly all the post-war victories in Formula I were secured by pre-war designs and not until 1951 was the basically 1938 1½-litre Alfa Romeo fairly beaten.

This effective racing life of thirteen years is most remarkable, for even taking into account the break caused by war years it is, in the scale of time, the equivalent of a 1908 Grand Prix car being as fast as a 1921 type, or, eliminating the war years, of a 1933 design being unbeaten until 1939.

This long run of success was not, however, wholly to be accounted for by the design of the Alfa Romeo. Political and commercial factors also played a prominent part in delaying the arrival of more modern designs with higher performance. In Italy lack of funds prevented Maserati from doing more than modify steadily the basic 1938 type and as this was originally inferior in performance to the Alfa Romeo it is only natural that it continued to exhibit this inferiority in all subsequent years. Whereas, however, Maserati won many international races when Alfa Romeo were not present, one of the most interesting post-war products, the Porsche-designed Cisitalia, was never, owing to lack of funds, able to make an appearance on a European circuit, the only completed car being shipped to Argentina, where it has made one brief and unsuccessful appearance. This is greatly to be regretted as, if developed, this horizontally opposed, twelve-cylinder, four-wheel drive car might well have shattered many circuit records.

Ferrari, by contrast, produced a number of original, yet practical, designs of considerable merit, but the efforts of a dozen or so designers and a mere 200 workpeople were concentrated first upon Formula II and sports-car racing. Not until 1949 was Ing. Aurelio Lampredi given instructions which resulted in the production of the 4½-litre Ferrari which proved to be the only serious rival to Alfa Romeo.

In France a series of political and economic crises prevented the development of any 1½-litre supercharged racing cars, although one such, the Arsenal CTA, was designed and built with state funds. This needed a great deal of development, for which further support was not forthcoming.

Anthony Lago, working as an exponent of private enterprise, produced a considerable number of six-cylinder 4½-litre Talbot cars, but although these ran with commendable reliability they were never able to challenge the Italians in power and speed.

Not until 1951 were German products considered eligible for Grand Prix racing and, as explained elsewhere, by this time the only company seriously interested in Formula I–Mercedes-Benz–decided that they would await the introduction of the 1954 formula. In England great public interest was concentrated upon the B.R.M., plans for which were laid in 1947 with a car first shown to the public at the end of 1949. Theoretically capable of beating not only any alternative Formula I type but also any pre-war car, this complicated, somewhat heavy, and unconventionally supercharged sixteen-cylinder model depended for success upon a strong and uniform development policy, rigorous, even destructive, testing, and ample funds. Unfortunately, none of these were forthcoming, and when at last in 1953 the cars showed that theoretical promise could be equated with practical performance Formula I was extinct so far as Grand Prix racing was concerned.

To sum up, with the exception of the 4½-litre Ferrari, the post-war designs of Formula I achieved no great success. This notwithstanding, they embodied many features of technical interest as may be seen from the brief descriptions which now ensue.

ARSENAL CTA

In the only entirely post-war design produced in France, the Arsenal C.T.A., the theoretical merits of the sixteen-cylinder type were passed. over. The engine was designed by Monsieur Lory and bears in many details a close relationship to his designs between 1924 and 1927. Like the 1924-5 2-litre Delages he chose to use a Vee-type engine ; like the 1926-7 1½-litre he settled upon eight cylinders. Whereas, however, the straight-eight Delages had a bore and stroke of 55.8 mm. x 76 mm. and an S : B ratio of 1.36 : 1, the C.T.A. designed ten years later had a bore and stroke of 60 mm. x 65 mm. and an S : B ratio of 1.08 : 1. As a consequence, the engine had a piston area of 35 sq. in. which may be compared with 31 sq. in. for the 1927 1½-litre type and 38.7 sq. in. for the 1925 2-litre Delage.

The two iron cylinder blocks retained the usual Lory features of integral cylinder heads having two overhead valves inclined at 100 degrees, also steel plates forming the sides of the water jacket so that the castings could be thoroughly cleaned before the engine was assembled and run. The layout of the valve covers was also highly reminiscent of Delage practice, but the drive to the camshafts (through trains of gears) was placed at the back end of the crankshaft and, as a major change, ignition was by two sparking plugs placed on the centre line of each cylinder head.

As can be seen from a transverse view of the engine reproduced in the last chapter of this book, each cylinder block was bolted on a light alloy crankcase with an included angle of 90 degrees between the axes. The crankcase was carried 6 in. below the centre line of the crankshaft and stiffened by through-bolts running beneath each of the five roller main bearings. These had split gauges and were located by caps deeply spigoted and held up on to the upper half of the case by set bolts. The shaft itself was 52 mm. diameter and the crank-pins were 42 mm. diameter each supporting connecting rods using roller tracks 15 mm. wide offset by 25 mm. The plain gudgeon-pin is 23 mm. diameter and the rod 140 mm. between centres or stroke by 2.15.

A two-section oil pump was located at the back end of the crankcase to provide for both scavenge and oil delivery, the latter being in the first place to external pipes and jets running to each main bearing, the side of the crank-webs carrying annular collectors so as to feed the hollow crank-pins and big ends by centrifugal force. At the top end of the engine the inlet valve with a diameter O.D. 37 mm. was slightly larger than the exhaust which was of 34 mm. giving valve areas of 13.3 and 10.3 sq. in. respectively. Each valve was closed by three coil springs with a follower introduced between the cam and the valve head. There was no internal cooling of the exhaust valve, but water was delivered from two pumps to an internal conduit placed between

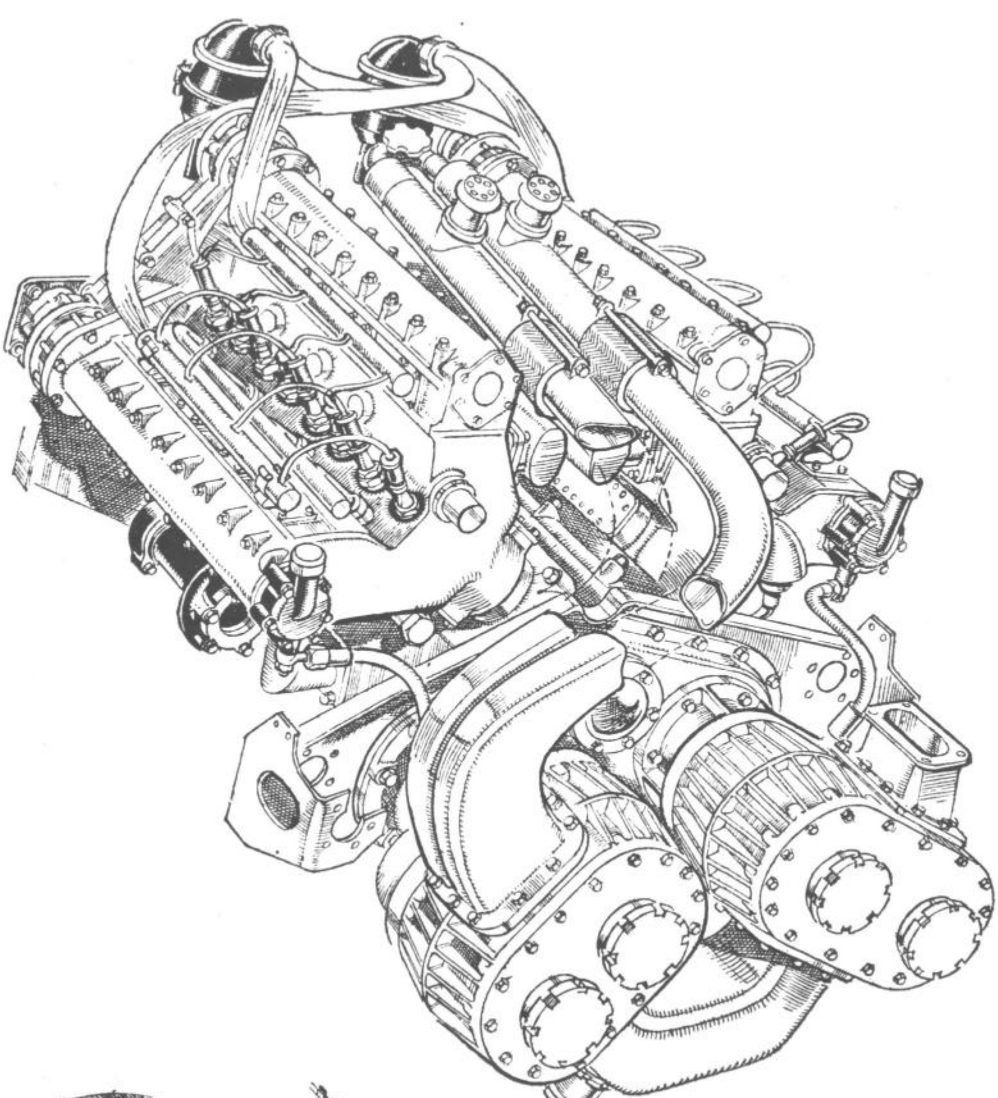

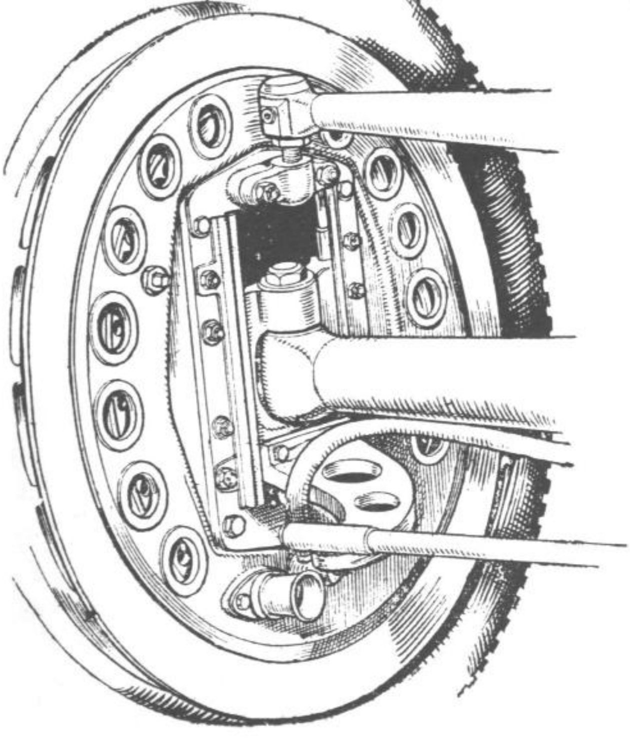

Although never run in a Grand Prix, the 1½-litre Arsenal C.T.A. Formula I car was an interesting example of immediate post-war design. The engine was laid out by Lory, and although of V.8 formation, shows in general layout a marked resemblance to the 1927 l½-litre Delage straight-eight of the same capacity. With two-stage supercharging with Roots blowers some 275 h.p. was realised from this power unit. The detail drawing (left) shows the unusual suspension system with the wheel supported on sliding blocks. This was not a successful arrangement.

the exhaust ports. From this a directed flow of water was spread around the seating of the valve and the base locating the valve guide.

Two Roots blowers giving two stages of boost were driven at three-quarters engine speed from the nose of the crankshaft, this modest rate presumably being chosen in order to lessen the turbulence around the rotor tips and indicating that the designer had in mind a very high crankshaft speed. Drawn from a downdraught double-choke four-float Solex carburetter, the mixture was supplied at 30 lb. boost (3 ata.) and, with this boost pressure, well over the 300 b.h.p. might well have been expected from the engine in its fully developed form. In fact, outputs of over 270 h.p. were attained on the test-bed, but after a disastrous first appearance in the French Grand Prix at Lyons in 1947 (in which the transmission succumbed on the starting line) the car failed to run in any subsequent event, although it appeared in practice for the French Grand Prix of 1948.

Whatever merits the engine may have had were obscured by various transmission and chassis troubles. The power unit was placed centrally in the frame with the crankshaft inclined downwards at 8 degrees, the propeller shaft passing beneath the central driving seat and being coupled to a double reduction gear placed ahead of the combined gear and bevel box housing which was attached to the tubular frame. Open halfshafts took the drive to the rear wheels, which were suspended on torsion bar springs and located by slides in a manner familiar to those who have studied locomotive design. A variation of this strange, and, as it turned out, unhappy, concept appeared at the front end of the car and it should be mentioned in fairness that Monsieur Lory was not responsible for the chassis layout.

The car as a whole was built on a national basis, using state funds, by the Centre d'Etude Technique de l'Automobile et du Cycle.

CISITALIA: PORSCHE TYPE 360

Although no less disappointing than the C.T.A., in that it was never seen in action, the twelve-cylinder rear-engined Cisitalia was a far more serious contribution to racing car design than the French project. The firm Cisitalia was founded in 1946 by Dusio in Turin with the initial objective of building a batch of fifty single-seater racing cars constructed mainly from Fiat parts. The idea was that these would make a class of racing cars in which, as every vehicle would have the same performance, the result would be a true reflex of the driver's skill. Or, to put the alternative viewpoint in the words of Dr. Alessio of Alfa Romeo. " Motor racing would degenerate into a mere struggle between drivers."

The 1,100 cc. racing cars were in due course followed by two-seater 1.3-litre production models carrying closed bodywork, and still further to raise the prestige of the company Dusio decided in 1947 to sponsor a brand new Formula I car produced to the very highest standards of design and performance. To this end he signed an agreement with the post-war organisation, then situate at Gmund in Austria, headed by Dr. Ing. h.c. Ferdinand Porsche. Working under Dr. Porsche's instructions, chief designer Raube and his assistants thereupon produced the drawings of the " Porsche Type 360," and Professor Dr. Ing. Eberan von Eberhorst went to Turin to act as a liaison officer and to develop the car in detail.

From a theoretical viewpoint the Type 360 Porsche is certainly the most interesting post-war racing car-indeed it is one of the most ingenious design studies in the whole history of motor racing. With a bore and stroke of 56 mm. x 51 mm. and twelve opposed cylinders, a piston area of 45.7 sq. in. is provided (i.e. slightly less than the figure given by the sixteen-cylinder B.R.M.) ; so, assuming that 12,000 r.p.m. could be maintained with reliability, and on a basis of 400 lb./sq. in. b.m.e.p., some 550 h.p. should have been attained with a fully developed engine.

CONSTRUCTION

The notes which follow have been made possible by the kind co-operation of Dipl.-Ing. Ferry Porsche, and Prof. Dr. Ing. R. E. van Eberhorst, who have supplied full working drawings and notes on the development of this project.

Engine

The horizontally opposed twelve-cylinder engine is placed directly behind the driver's seat and the vertically split light alloy crankcase extends outwards to form the water jackets. Individual cylinder liners in direct contact with the water are inserted and are sealed by light alloy detachable cylinder heads which are cast in one piece for each block. Each head carries two valves at an included angle of 90 degrees which seat direct, the inlet valve having an o.d. of 35 mm. giving a total inlet valve area of 17.9 sq. in. This is slightly greater than the area available on the 1939 3-litre Auto Unions and in accord with a projected output of 500 b.h.p.

The valves are opened by two camshafts for each bank through the medium of followers and a single 18 mm. plug is used set well back and with a 6 mm. passage connecting the points to the combustion chamber.

The bore and stroke give a piston area of 45.7 sq. in. and the seven-bearing Hirth type crankshaft has the remarkably large diameter of 54 mm., which is nearly equal to the bore itself. Even the gudgeon-pin is 18 mm. diameter, or one-third of the

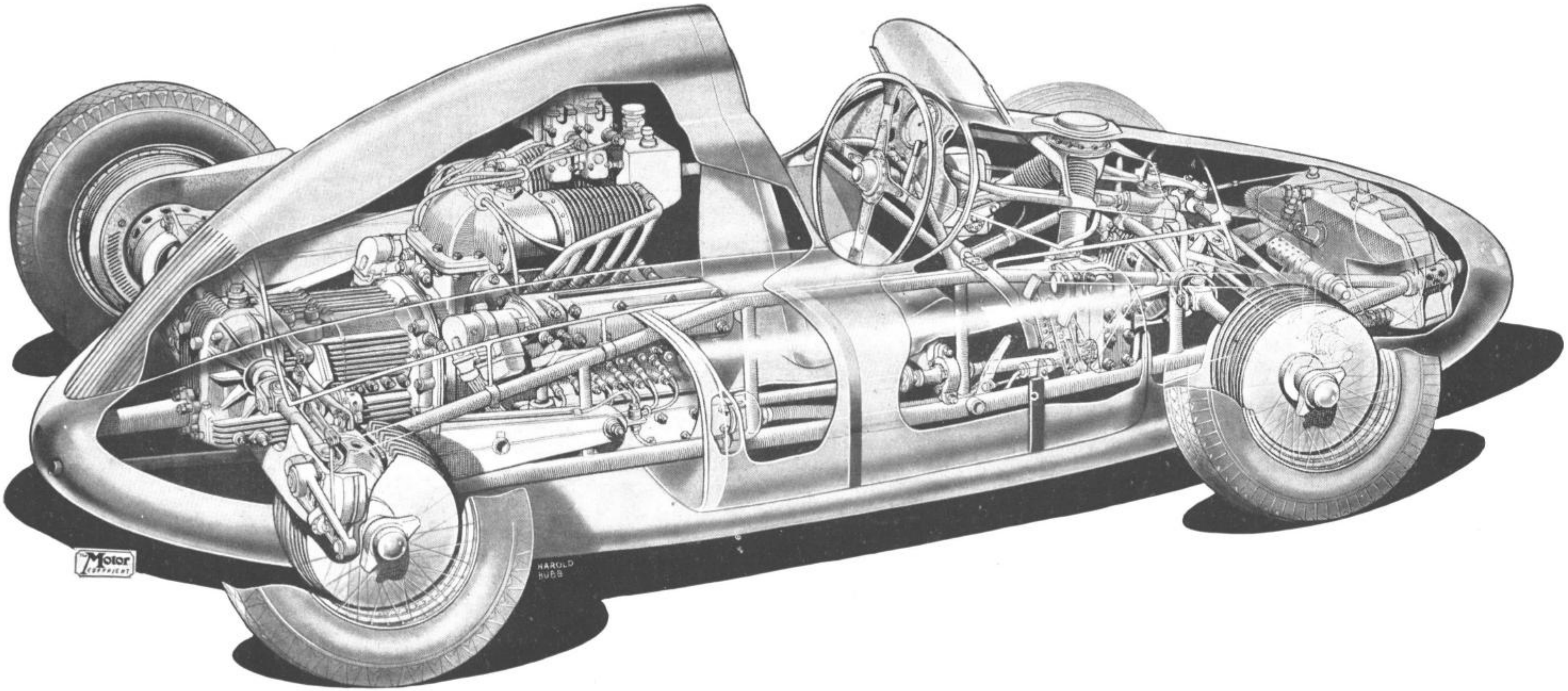

PLATE 11

The 1½-litre Fiat-12 Cisitalia was designed by Dr. Porsche and his team of engineers, Although it has never appeared in European competition the design was of striking originality and one car was assembled and shipped to Argentina. As can he seen from this drawing, a space type frame supports a rear-mounted engine driving a constant-mesh five-speed gearbox and supercharged by two vane type compressors. Rear suspension embodied double-jointed halfshafts, the wheels being supported by transverse radius arms and a longitudinal torque arm. An unique,feature of the car was the provision for four-wheel drive through a forward running propeller shaft connecting to a front bevel and differential box which could be coupled up at the will of the driver.

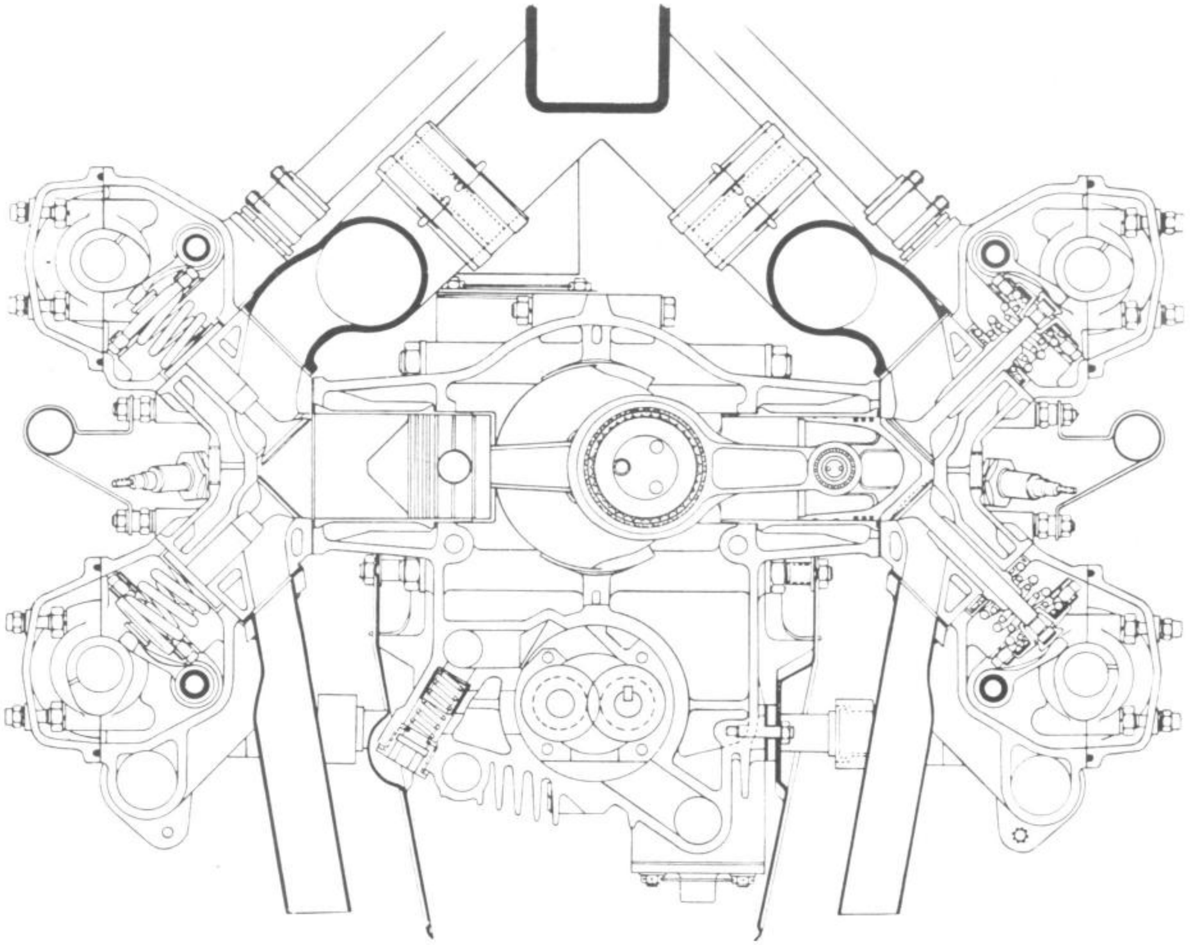

This 1 : 4 scale drawing of the Porsche-designed Cisitalia engine reveals the great stiffness of the crank-connecting rod-piston assembly, and the interesting use of a detachable cylinder head with direct seating for both inlet and exhaust valves. The cylinder liners are individually detachable sleeves.

cylinder bore, and although the connecting rods which are one-piece types are conventionally proportioned with a length between centres of crank radius x 4 they are absolutely only 4 in. long. In consequence, that section of the rod lying above the big end radii and below the gudgeon-pin fillet is little more than 1¾ in. long, giving an exceptionally stiff assembly.

Partly by reason of wet cylinder liners the cylinder centres are only 69 mm. apart so that the overall length of the engine, excluding the clutch, is only 22 in.

This compact layout is greatly assisted by the manifolding arrangement in which the exhaust ports discharge directly downwards, the ingoing charge being fed to the inlet ports from two vane type blowers mounted above the crankcase. These are of single-stage type with internal compression having ported drums to separate the blades from the light alloy casing. Fuel is supplied through downdraught carburettors which project into the head fairing provided for the driver.

On a basis of 10 h.p. per sq. in. of piston area this engine should have produced nearly 450 b.h.p. at 10,500 r.p.m., this being the equivalent of 370 b.m.e.p. at a piston speed of 3,350 ft./min.

It was anticipated that this car would weigh not more than 2,200 lb. on the starting line and the corresponding figure of 450 h.p./ton is about 10 per cent higher than that achieved in 1939 and little short of that obtained in 1937. The knowledge that the full power of these cars could not usefully be applied owing to wheelspin led to the decision that on the Porsche Type 360 the engine should be connected to both front and rear wheels.

Transmission

Power is transmitted through a 7½-in. diameter multi-plate clutch to a five-speed gearbox mounted somewhat surprisingly between the engine and the bevel box. The gearcase is split vertically on the centre line, a necessity in view of the novel gear engagement system employed.

A pair of constant-mesh wheels takes the drive from the clutch shaft down to a shaft lying on a lower plane. Surrounding this lower shaft are five gear wheels in constant mesh with corresponding gears fixed to the upper shaft which drives the bevel pinion. The lower gears are each separately mounted on a ball bearing with the lower drive shaft running freely inside them, and by moving a sleeve horizontally in relation to the lower train of gears successive ratios can be picked up by external serrations on the sleeve engaging with internal splines on the gears.

This gives an exceptionally compact layout but, in effect, a quadrant gear change in which a change from fifth to second speed demands the momentary engagement of the fourth and third ratios.

An orthodox bevel drive and Z-F differential transmits power to the rear wheels through the medium of open shafts each with two Hooke type joints.

A spur type gear engaging with the lower gear shaft transmits power to a two-piece open propeller shaft (running 7½ in. below the hub centres) forward to a train of three gears and a bevel box at the front of the car. This drive could be brought in at will by means of a dog clutch and a lever placed below the steering column and the open halfshafts driving the front wheels have double Hooke joints at the outer end to give constant velocity, normal Hooke type joints being used inboard.

Rear Suspension

The 1934-37 Auto Union A-C type cars for which Dr. Porsche was responsible had swing axles and the 1938-9 D type designs, influenced by von Eberhorst, were fitted with de Dion rear axle layout. The Porsche Type 360 used neither, the rear wheels being located longitudinally by fabricated radius arms 31 in. between centres splayed out at 9 degrees. The hubs were connected to the frame by equal length (8.7 in.) arms on each side, a third arm being used for the hydraulic damper.

The car is supported by two rear torsion bars 0.65 in. diameter and with a free length of 20 in.

Front Suspension

A conventional Porsche layout with trailing arms on each side carrying the wheels on ball joints and connected to transverse torsion bars carried in the lower cross-member of the frame.

Steering Gear

A Porsche steering box is mounted high up on the frame, the drop arm carrying two ball joints connecting with the swinging half-trackrods.

Frame

As on the immediately post-war 1,100 c.c. Cisitalias the design embraced a space type multi-tubular frame, the main tubes being 1.36 in. diameter. The structure measures 132 in. from end to end, the main tubes in the centre section being separated by 16½ in.

Brakes

Four leading shoes are fitted within outboard brakes having an external diameter of 17¼ in. with the shoes measuring 13½ in. diameter and 2¼ in. wide. Each friction lining subtends at an angle of 75 degrees and by using cranks and push-rods the four shoes are expanded by two cylinders. A lining area of 320 sq. in. was available.

Body and General Features

As the whole of the tail of the Cisitalia is occupied by the engine and transmission aggregate side-tanks were a virtual necessity more especially as the squab of the driver's seat is slightly nearer the rear axle than the front. A single filler is provided for the tanks just ahead of the windscreen and the tanks themselves are designed in some degree to act as fairings behind the front wheels.

The relatively long nose of the vehicle is sharply swept down to embrace an oil tank for the dry sump engine and a radiator core mounted at approximately hub level. At the back of the car an exceptionally high headrest is a dominant feature dictated in some measure by the necessity to place the driver's seat above the central propellor shaft.

Dimensions of 1.5-litre Cisitalia

Wheelbase 8 ft. 6½ in.; front track 4ft. 3in.; rear track 4ft. 2in.; overall height 3 ft. 9 in.

The gear train layout of the Cisitalia, a point of particular interest being the compactness of the five gear trains achieved at the expense of a selection arrangement which made it necessary for the gears to be engaged consecutively.

This I : 25 scale drawing shows the general layout of the Porsche Type 360 designed for the Cisitalia company. The compactness of the engine and gearbox unit can be observed, also the forward drive arrangement and the deep headrest which embraces the down-draught carburetters.

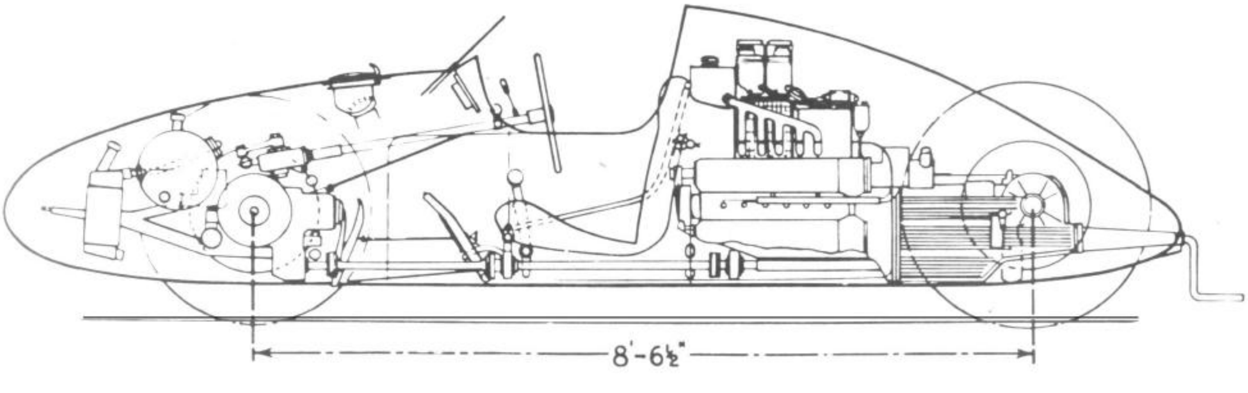

FERRARI 1.5-LITRE

In the decade before World War II, Enzo Ferrari organised the Scuderia Ferrari which, with headquarters at Modena, engaged in the business of racing cars and motor cycles as a commercial proposition. In some years, the Scuderia acted, so to speak, as the racing agents of Alfa Romeo, and in 1940 Ferrari entered the world of automobile manufacturers under his own name with a sports car having an eight-cylinder engine based upon four-cylinder Fiat parts.

At the end of the war he secured from Alfa Romeo the services of Ing. Colombo and a number of the Alfa Romeo development engineers, such as Bazzi, whose experience dated back to the phase of the 1924 P.2 supercharged Grand Prix cars.

In February, 1947, Ferrari announced a 1½-litre unsupercharged sports car having a V.12 cylinder engine developing 118 h.p., fitted into an oval tube frame with wishbone type independent front suspension coupled to a low-mounted transverse leaf spring. A live rear axle was supported on semi-elliptic springs and a five-speed gearbox with an indirect overdrive was bolted to the clutch housing. This model formed the basis of the 1½-litre racing car which was introduced for the Italian Grand Prix at Turin late in 1948 and, in the absence of Alfa Romeo, this was the most successful car in the Grandes Epreuves of 1949.

Presentation of the ensuing facts has been greatly assisted by statistics provided by the manufacturers, which make it possible to provide reasonably detailed information regarding the post-war Ferrari racing cars.

Engine

The Ferrari is remarkable for being the first car since 1907 to compete in the Grandes Epreuves with an engine having a larger bore than stroke. The very small absolute stroke and large piston area gave this model an inherent advantage over any rival 1½-litre supercharged model (with the exception of the B.R.M.) for the exceptional piston area (44 sq. in.) makes 10,000 r.p.m. attainable without exceeding 3,500 ft./min. piston speed. As run in 1949, however, the maximum engine speed was only 7,500 r.p.m. and with a comparatively modest figure for b.m.e.p. the engine output was no greater than that achieved by cars with considerably fewer cylinders and substantially lower piston area.

The main engine casting is in light alloy and contains the supports for a seven-bearing crankshaft and the water jackets for the twelve inserted wet liners which are grouped in two banks of six at an included angle of 60 degrees. These liners have a flange at their base to provide a water seal, and are closed at their top end by an aluminium-silicon cylinder head (one per bank), each combustion space containing two valves inclined at an included angle of 60 degrees. The inlet valve has a very slightly greater outside diameter than the exhaust valve (1.26 in. as compared with 1.18 in.) and the valve area is therefore 34 per cent of the piston area, the flow value of 15.1 h.p./sq. in. being somewhat low in relation to the manifold pressure. Each valve is closed by a pair of hairpin valve springs lying in a fore and aft plane and opened by a rocker from a single overhead camshaft lying above the centre of the head. The sparking plugs are inserted into the inlet side of the head, i.e. facing inwards into the vee of the cylinder block, and a single Roots type blower running at 1.22 times engine speed is mounted

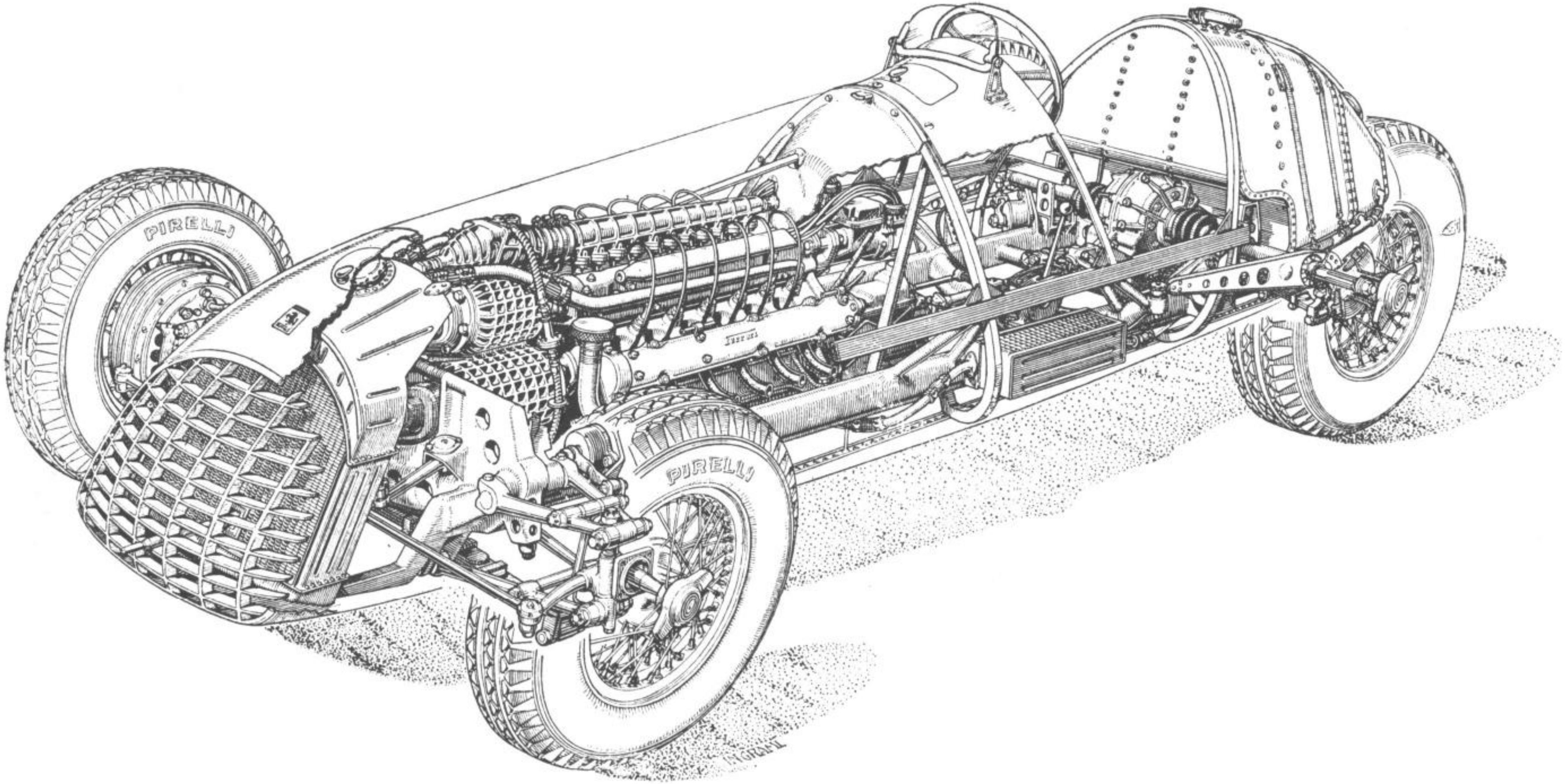

The chassis and running gear of the 1949-50 1½-litre two-stage supercharged twelve-cylinder Ferrari resemble closely the layout used for the preceding Formula I and II models with single stage, single camshaft 1½-litre engines,or unsupercharged 2-litre engines, and the subsequent unsupercharged 3.3, 4.5 and 2-litre models. The car as shown was, in the absence of the Alfa Romeo, the fastest car of 1949, but was subsequently superseded by the unsupercharged models which had also de Dion rear axles in place of the swing axle shown here.

at the front of the engine discharging into a central manifold and inspiring from a single horizontal Weber carburetter. The camshafts are also used to drive two Marelli magnetos.

A moderate compression ratio of 6.5 : 1 is provided by the slightly domed pistons and the connecting rods are placed side by side on the crank-pin, which is of 1.77 in. diameter. The design of the big ends is interesting in that the division is made vertically, so that the bottom half of the rod may be withdrawn upwards through the cylinder bores if necessary. The crankshaft is heavily counter-balanced and a gear-type pump mounted at the front of the engine feeds into the end of each crankshaft and thence directly through internal passages to the big ends. The main bearings (of 2.313 in. diameter) are separately supplied with oil and this scheme has the particular merit that changes in main-bearing clearances do not affect the oil feed to the big ends, or vice versa:, The weight of the engine with clutch is 430 lb.

Gearbox

A five-speed gearbox is provided bolted direct to the clutch housing, all the gears being in constant mesh and of helical pinion type.

Rear Axle

An open propeller shaft transmits drive to a fixed bevel box, an intermediate gear being used so that the propeller shaft line is considerably below the centre line of the rear halfshafts.

Rear Suspension

The swing axle principle is used for the rear wheel suspension so that the exposed halfshafts are fitted with inboard joints only, whilst a single radius arm is inclined inwards from the hub to a pivot point on the frame. A single transverse leaf spring runs behind and is mounted somewhat below the halfshafts the length of the master leaf being approximately 36 in.

Front Suspension

A transverse spring having a master leaf 38 in. long is mounted beneath the frame in front and connects through levers to a system of unequal-length wishbones which give individual suspension to each front wheel. Both front and rear wheels are damped by Houdaille vane type hydraulic shock absorbers.

Steering Gear

A worm and wheel mechanism mounted at the extreme front on the right-hand side of the frame transmits motion to a central cross-rod, to which two equal-length swinging track-rods are joined, these being mounted ahead of the front wheel centres.

Frame

An oval tube frame is used having a depth of 3.65 in. and a wall thickness of 0.10 in. Large tubular cross-members are placed at the rear end of the frame just ahead of the rear axle housing ; beneath the driver's seat ; and at the extreme front of the car, where additional reinforcement is provided by a transverse plate extending from one side of the frame to the other. In addition, the scuttle is built up with two hoop-shaped members which are welded to the frame to give additional support in the centre section, *Brakes*

Hydraulic brakes are used, the front drums being 14 in. diameter and 2 in. wide, and the rear 12 in. diameter and 2.35 in. wide.

Body, General Features, and plates on the twin-camshaft model

The driver is mounted centrally, and the whole car has an exceptionally compact appearance derived from its remarkably short wheelbase. This in turn, however, resulted in a fair amount of overhang both at the front for the radiator cowling and at the rear for the 31-gallon fuel tank.

The combination of swing axle with very short wheelbase gave this model rather pronounced oversteering qualities and in the Formula II cars raced during 1949 the wheelbase was extended by 7 in. This lengthened chassis was also used for the double-camshaft version of the car which also had two-stage supercharging. Although this model won the European Grand Prix of 1949 and achieved two second places in the course of four appearances in 1950, from June, 1950, onwards attention of the works has been concentrated upon the 4½-litre model which is described separately.

Dimensions of 1.5-litre single-stage Ferrari

Wheelbase 7 ft. 1 in. or 7 ft. 8 in. ; track 4 ft. 2½ in.

SIMCA-GORDINI

Although unable (between 1947 and 1951) to secure a place in any of the Grandes Epreuves, the cars built by Amedée Gordini using Simca parts have had certain successes in " classic events " and some notes on their design and construction are therefore justified.

Before 1939 the Equipe Gordini specialised in modifying the French Simca car (which in turn was a synonym for a Fiat built under licence) for sports-car races. Immediately after the war a 1.1-litre single-seater car was produced and gave a good account of itself in a number of minor events which were not run strictly to Formula I limits. Between 1948 and 1949 the swept volume in the engine was enlarged firstly to 1,220 c.c. and then to 1,430 c.c., but the basic Fiat engine design with three-bearing crankshaft and a single camshaft operating in-line overhead valves through push-rods and rockers was retained. Developing 65 b.h.p. in 1.1-litre form, the power unit was installed in a tubular frame, Fiat type front suspension units being employed, and a normal rear axle located by links and sprung with torsion bars. The subsequent development of this engine led to an inclined valve cylinder head with cross push-rods worked from the crankcase-mounted single camshaft. In 1950 the car was still further modified.

Engine

The 1951 Formula I engine used the 1950 type cylinder block, which is an iron casting in one with the crankcase giving support to five main bearings. The engine has a bore and stroke of 78 mm. by 78 mm. and a capacity of 1,491 c.c., the bores themselves being formed from inserted liners of nickel chrome molybdenum alloy. The new light alloy cylinder head of the 1951 cars was supplemented by two overhead camshafts driven by a train of gears from the nose of the crankshaft. These gears also connect with a Wade Roots type blower projecting forwards and receiving mixture from a large horizontal Solex carburetter.

The Type RL 15 Wade has a swept volume of 1.5 litres per revolution and is geared to run at 1.45 times engine speed at a crank speed of 7,000 r.p.m. The blower speed is therefore a little over 10,000 r.p.m. and a boost pressure of 16 lb./sq. in. or 2.07 ata. is provided. These British designed and built blowers are unique in racing practice in that they have four lobe rotors-an arrangement which produces a greater frequency on the delivery side of the blower and therefore a smoother outflow at the expense of some reduction in effective working capacity for a given size of casing.

The casing of the Wade blower is also remarkable for the use of a helical port, this also giving a more even delivery characteristic.

A Scintilla magneto is mounted vertically and placed adjacent to the supercharger, current being supplied to sparking plugs situate in the crown of the hemispherical combustion chambers ; each plug is deeply recessed into a light alloy spine superimposed on the cylinder head with which the valve cover mates, and both camshafts are therefore enclosed within one cover.

The camshafts themselves are mounted quite close to the centre line of the cylinder head, the 90-degree inclined valves being worked through rockers. Two valves per cylinder are used, the inlet valves being very much larger in diameter than the exhaust, and although no h.p. figures in supercharged form for this engine have been released the fact that 100 h.p. has been claimed in the unblown state makes a figure of *circa* 180 h.p. a reasonable one for the blown version.

It is perhaps worth noting that with this engine, as with other types in which high crankshaft speed is combined with plain bearings, the latter are of the Vandervell thin-wall type. The crankshaft of the engine is, it should be noted, heavily counterweighted.

Gearbox

The normal gearbox mounted in unit with the engine provides four forward speeds, but an alternative box giving a fifth overdrive ratio can be fitted.

Rear Axle

A live bevel-drive rear axle is used.

Rear Suspension

The position of the rear axle is controlled by link motion which is attached to torsion bars running parallel with the transmission line.

Front Suspension

The normal Type 1100 Fiat front suspension is used, this having a lower wishbone surmounted by a single upper arm which connects through a rocker to an enclosed coil spring, the damper being embodied within the working mechanism.

Steering

The Fiat 1100 type of steering gear has two-piece track-rod placed ahead of the front wheel centres.

Frame

The Simca Gordini has a round tubular frame of thin-wall section made from high tensile steel.

Brakes

Hydraulic.

Body and General Features

As may be realised from the dimensions set out below, the car is remarkable for its small overall size. The driver sits immediately above the propeller shaft and ahead of a normal rear-mounted tank. Every endeavour has been made on this car to keep width, height and correspondingly low frontal area down to the lowest possible figure. The weight of the vehicle has been estimated at only 8 cwt. and if this estimate is correct the car may have the high power : weight figure of 310 h.p./ton with which to offset the somewhat low figure of 18 h.p./sq. ft. of frontal area. From these figures it is understandable that the car has been most successful on circuits which do not permit very high maximum speeds.

Dimensions

Wheelbase 7 ft. 4½ in. ; Track 3 ft. 8¼ in.

4.5-LITRE LAGO TALBOT

No car running in Formula I has had so old an ancestry as the " Lago " Talbot, or simply Talbot as it is known in Europe. Of the two lines in the pedigree, one runs back to the Clement-Bayard, the English design rights for which were purchased by a syndicate headed by the Earl of Shrewsbury and Talbot. This make was sold in England as the Clement Talbot car up to the outbreak of the 1914-8 war. The other line, represented in concrete form to-day by the site of the Paris works, goes back to the Darracq Company, and the two were merged in the Sunbeam-Talbot-Darracq combine of 1920. In the ensuing years the products of the French branch became known as Talbot-Darracqs and when the combine was dissolved in 1934 the British rights in the name of Sunbeam and Talbot passed into the hands of the Rootes Group, whilst Mr. Tony Lago secured the French factory and the rights in the name and trade mark of Talbot and Darracq.

The 1926-7 1½-litre straight-eight Talbot cars had been designed and constructed in this factory and the concern re-established its thirty-year-old associations with Grand Prix racing by entering single-seater models with 4-litre engines in the 1938-9 French Grand Prix and a number of other events. The 4½-litre model about to be described made its first appearance in 1948 and won a number of Grandes Epreuves in the subsequent two years.

The 4½-litre Talbot Grand Prix racing car is very closely allied indeed to the standard production model known as the " Grand Sport " and even more closely to the two-seater type which has been prominent in the Le Mans twenty-four-hour and other sports-car races.

Engine

A single casting is used for the six-cylinder bores and the upper half of the crankcase and the hardened seven-bearing crankshaft runs in plain bearings.

The main casting extends well below the centre line of the shaft, with internal webs into which the bottom half of the main-bearing caps are recessed. At the top of the block there is a double wall between the water jackets which surround the bores and the outer face of the block. Tappets and push-rods moved by a pair of camshafts situate each side of the cylinders occupy this space and the push-rods extend through the cylinder head to engage with rockers operating two inclined valves per cylinder in the detachable light alloy head. These valves are inclined at an included angle of 90 degrees and a deeply masked sparking plug is placed between them. Cooling around the exhaust valve seat is improved by the complete inhibition of water flow between the block and the head on the inlet side and this forces all the discharge water through holes drilled immediately below the exhaust ports.

Three downdraught Zenith carburetters supply mixture to pairs of cylinders and receive air at ambient temperature from the long collector pipe which is housed in a scoop formed in the top of the bonnet. Fuel is supplied by two A.C. Mechanical fuel pumps mounted on the side of the crankcase and driven from the inlet camshaft. The magneto is driven from the front timing gears and on some 1950-1 models two sparking plugs per cylinder are fitted. A detail feature worthy of comment in an otherwise wholly straightforward layout is the elaborate system of oil cooling used on these cars. The scavenge pump feeds the oil back into a tank mounted beneath the

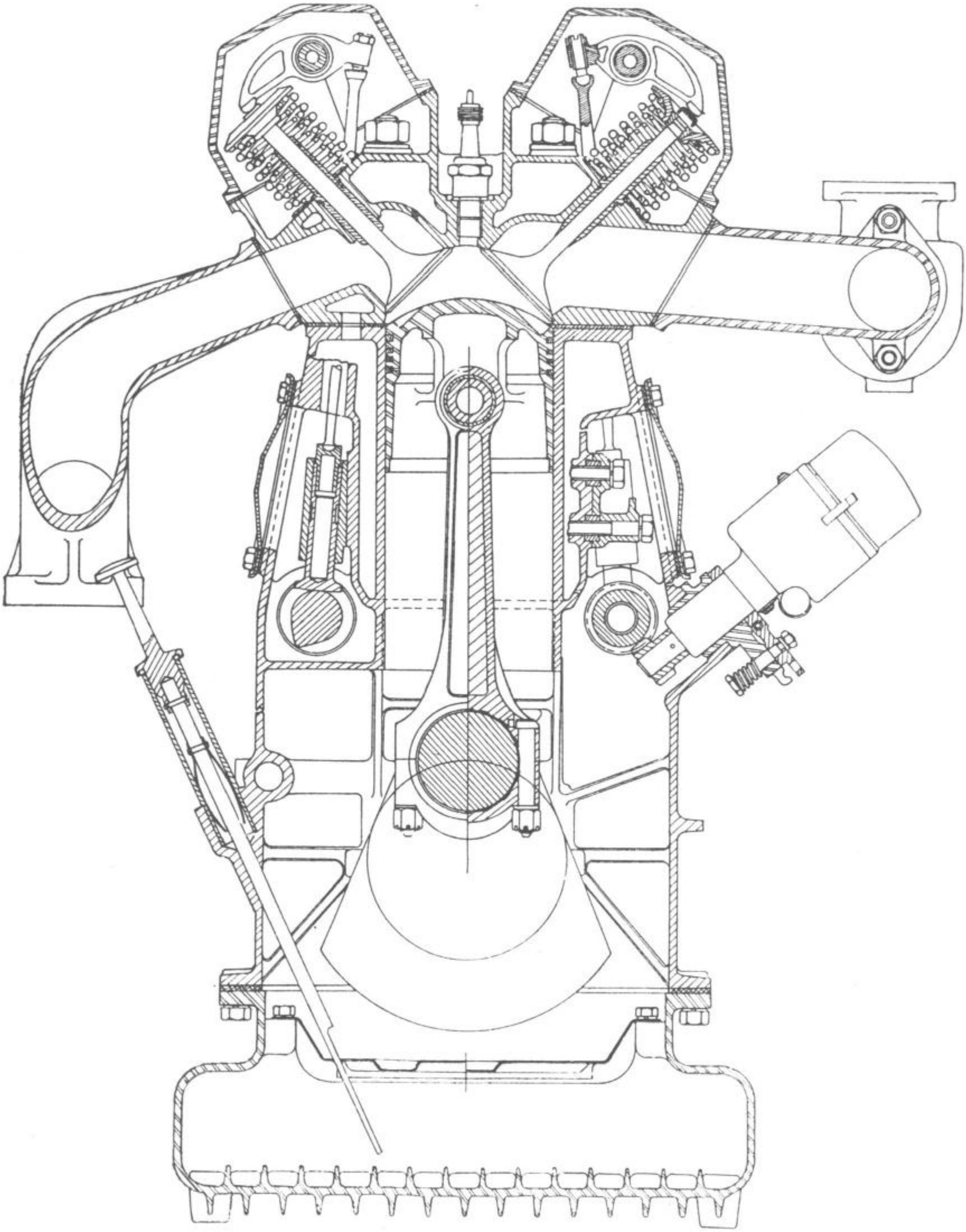

From 1948 onwards 4½-litre U/S Talbot cars have been fitted with six-cylinder engines having a detachable head fitted with two inclined valves per cylinder. These valves have been operated by double camshafts placed in the crankcase as shown in this cross-section. (Scale 1 : 4.)

scuttle and in the course of circulation oil has to pass through a large number of small diameter tubes which project through the scuttle.

Gearbox and Transmission

A four-speed Wilson pre-selector gearbox built upon the same principles as the unit employed by E.R.A. (*q.v.*) is bolted to the engine and immediately behind it is a housing containing spur gears which markedly offsets the propeller-shaft line to the right-hand side of the car.

Rear Axle

A live rear axle is employed, a deeply ribbed housing being split on the centre line of the casting.

Rear Suspension

Semi-elliptic springs support the car and take the torque on the Hotchkiss system, damping being provided by friction type shock absorbers supplementing direct-acting telescopic types which are inclined inwards at an angle of about 30 degrees.

Front Suspension

A transverse leaf spring forms the lower link of a wishbone system, the upper arms of which are formed of plates which have a shorter effective length than the appropriate half of the leaf spring. Friction type dampers are also employed at the front of the car.

Steering Gear

A worm and nut steering box is employed.

Frame

A box-section frame is used, the sides being pierced to save the weight and the section diminished in depth behind the rear spring hangers, at which point there is a down-sweep to pass the side-members beneath the rear axle.

Brakes

In the 1948-9 models cable-operated Bendix brakes were used, but the later models employ Lockheed brakes with two leading shoes, the fore and aft pairs being operated by individual master cylinder connected by a whiffle tree.

Body and General Features

The offsetting of the propeller shaft makes it possible to place the driving seat much lower than would have been the case with an orthodox propeller shaft and live axle. Despite the handicap of the longest stroke in Formula I racing with a corresponding tall engine, the whole car has been kept reasonably compact. Fuel is housed in the single tank behind the driver's seat and the performance of the cars in racing has been materially aided by their good fuel consumption, which has made it possible for them to cover the regulation distance of 500 kms. for a Grande Epreuve with only one stop for fuel.

Dimensions

Wheelbase 8 ft. 2½ in. ; front track 4 ft. 6 in. ; rear track 4 ft. 3½ in.

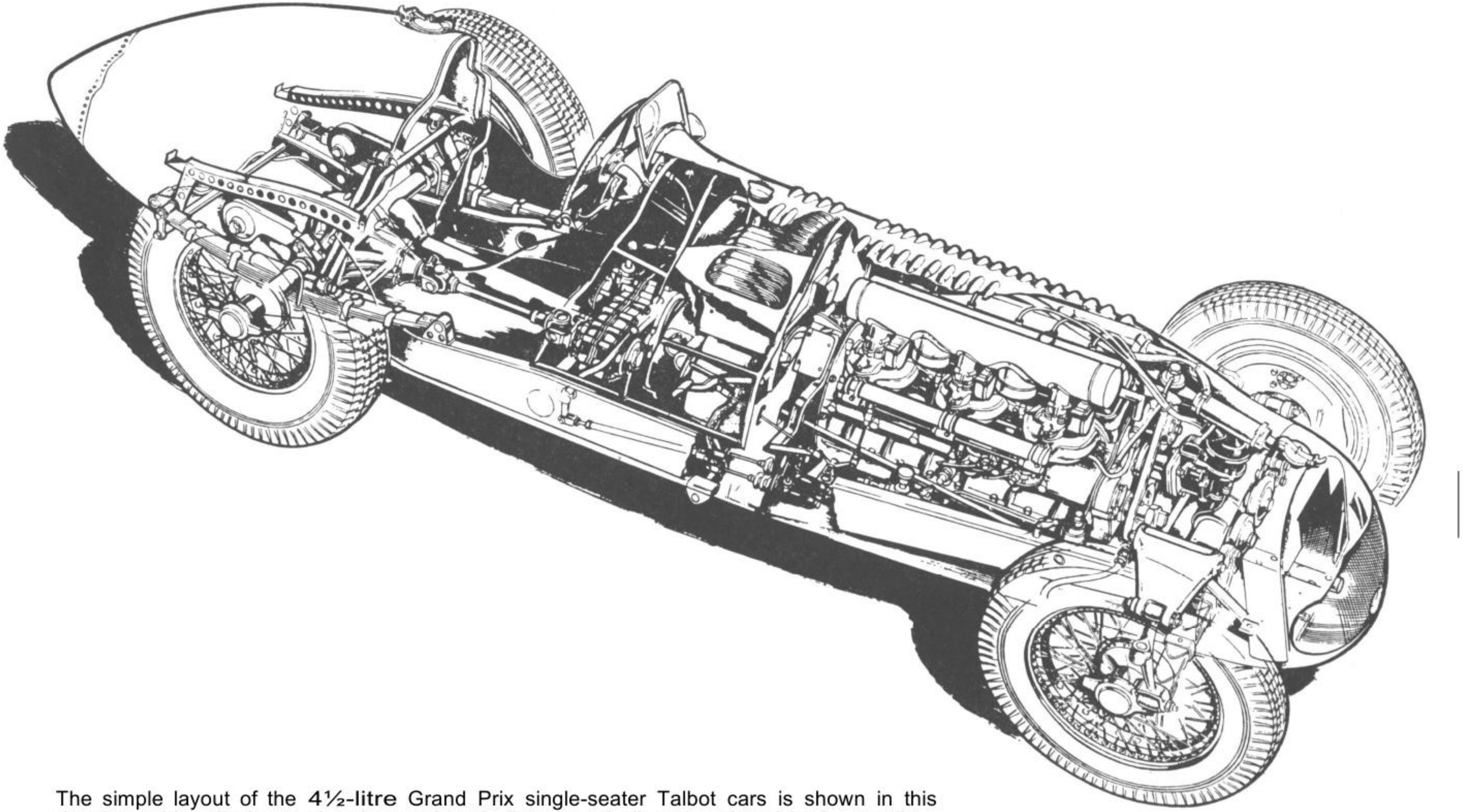

The simple layout of the 4½-litre Grand Prix single-seater Talbot cars is shown in this drawing, which discloses also the combined oil tank and oil cooler placed in the scuttle and the marked offsetting of the propeller shaft which enables the driver's seat to be placed below the level of the propeller shaft.

STATISTICS FOR RACING CARS, 1947-51

	1947 *Alfa Romeo Type 158*	1948 *Alfa Romeo Type 158*	1951 *Alfa Romeo Type 158*	1953 *B.R.M.*	*Cisitalia**	*E.R.A.*	*1.5-litre Ferrari*	*1.5-litre Ferrari two-stage*	1951 *4.5-litre Ferrari*	*Maserati 4 CLT*	*Lago Talbot*
Cylinders	8	8	8	16	12	6	12	12	12	4	6
Bore M/M	58	58	58	49.53	55	57.5	55	55	80	78	93
Stroke M/M	70	70	70	48.26	50.5	95.2	52.5	52.5	74.5	78	110
S/B Ratio	1.2	1.2	1.2	0.975	0.92	1.66	0.95	0.95	0.93	1	1.13
Engine capacity CM³	1,488	1,488	1,488	1,488	1,440	1,488	1,498	1,498		1,498	4,485
B.H.P.	254	310	380	525	450	175	225	300	380	260	250
R.P.M.	7,500	7,500	9,000	10,500	10,500	7,000	7,500	7,500	7,500	7,500	5,000
B.H.P. per litre	171	206	253	350	300	117	150	200	84.5	173	60.2
B.M.E.P. lb./sq. in.	294	358	366	434	370	225	260	346	147	300	145
Piston speed f.p.m.	3,450	3,450	4,170	3,340	3,350	4,320	2,600	2,600	3,660	3,850	3,780
Piston area sq. in.	32.8	32.8	32.8	47.8	44.2	24.1	42.2	42.2	93.6	29.6	63.2
H.P. per sq. in. piston area	7.74	9.45	11.7	10.98	10.2	7.25	5.35	7.23	4.06	8	3.98
Piston area sq. in. per litre	21.9	21.9	21.9	31.8	29.5	16	28	28	20.8	19.7	14
Induction system	2.2 ata	2.7 ata	3 ata	5.7 ata	2.7 ata	2 ata	2.6 ata	2.6 ata	1 ata	2.6 ata	1 ata
Frontal area sq. ft.	10	10	10	10	10.5	13.5	9.8	9.8	10.75	11	12.5
H.P. per sq. ft.	27.5	31	36	52	43	13	23	30.5	32.2	23.6	20
Weight cwt. unladen	15.8	16.3	16.5	16	14.7	14.5	13.5	14.5	16	15	18
Weight with crew and fuel (cwt.)	19.5	20	21.5	20	20	18	17.25	18.25	19.75	18.5	22
Engine litres per laden ton	1.54	1.5	1.4	1.50	1.33	1.67	1.74	1.64	4.56	1.64	4.07
Engine B.H.P. per laden ton	260	310	354	525	450	195	260	328	386	280	227
Maximum road speed ; m.p.h.	165	175	190**	195**	190**	125	160	175	180**	160	155

* All Cisitalia figures are hypothetical.

** Determined by final gear ratio more than by b.h.p./sq. ft.

EXAMPLE No. EIGHTEEN

The Ferrari 4½-litre

ONE of the first tasks to which Aurelio Lampredi gave his attention in the midsummer of 1949 was the development of a new series of unsupercharged engines. He planned to fit these into the long chassis Formula II cars with de Dion rear axle for which he was also responsible, and he commenced work on the new engines in September, 1949.

Full use was made of the knowledge and experience gained on the Colombo-designed single camshaft V12 engines of 1½ litres and 2 litres capacity which had a bore and stroke (in the 2-litre case) of 60 x 58.8 mm. The new series of engines were built in the first instance with a bore and stroke of 72 x 68, giving a swept volume of 3.3 litres, the enlargement of the bore being facilitated by a change in the cylinder liner location whereby the large diameter flange used for bolting together the liner and head on the supercharged models was eliminated, as was the simple face joint between the head and the liner characteristics of the earlier unblown types.

The 3.3-litre car made its racing debut in the Belgian Grand Prix of June 18th 1950, in which it was driven by Ascari, who was in practice not only twelve seconds slower than the fastest Alfa Romeo Type 158, but two seconds slower than the fastest 4½-litre Talbot driven by Sommer. In July the cylinder bore was raised to 80 mm. giving a swept volume of 4.1 litres, and the car appeared in this form for the Grand Prix des Nations held at Geneva on July 30th. In practice it now proved two seconds a lap slower than the fastest Alfa Romeo and four seconds faster than Sommer on the Talbot. For the Italian Grand Prix of September 3rd, and the Penya Rhin Grand Prix of October 29th, two cars were built with engines having the 80 mm. bore with the stroke increased to 74.5 mm., giving a swept volume of 4,494 c.c. or within 6 c.c. of the maximum permissible under Formula I.

In 1951 all the cars raced used the 4½-litre engines and their successes and relative lap speeds have already been recorded.

As already mentioned, although a new hand was engaged in the design of these cars, the general layout was basically similar to the smaller engines, a feature of interest common to the whole range being the use of a larger bore than stroke, with the consequence that the engine has, with one exception, the largest piston area of any racing car engine built since 1908.

The crankcase is split on the centre line of the crankshaft and provides a four-point mounting in the frame through the medium of rubber blocks. This light alloy casting also forms the water jackets for the cylinder liners, but some trouble having been experienced with the joint used on the detachable heads in the 1½-litre model, on the bigger engine a thread is machined in the combustion space into which the cylinder liner is screwed. Each head, with six pendant liners, can therefore be bolted to the block with the need for only one joint at the base of the liner, and that is required only to contain water, there being no gas joint in the design.

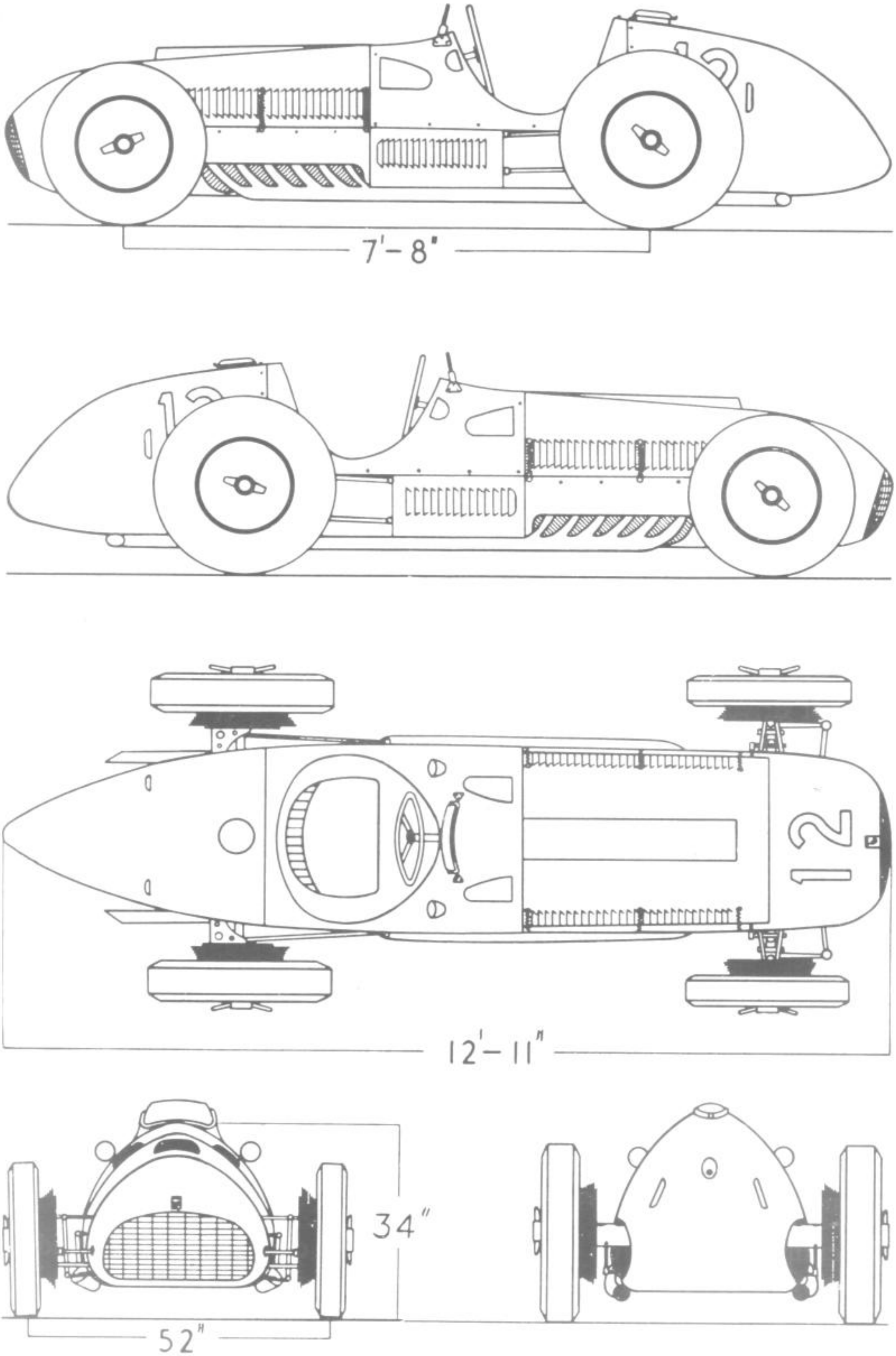

The 1951 Formula 1 twelve-cylinder Ferrari car to scale of 1 : 30.

There are additional advantages. A heat barrier between the head and bore is eliminated and, as already mentioned, the diameter of the cylinder bore (and of course of the combustion space) can be enlarged without increasing the distance between the cylinder axes. Each cylinder head is a single light alloy casting with inserted valve seats and two valves per cylinder, inclined at an included angle of 60 degrees, are used, the inlet being 1.625 in. diameter and the exhaust 1.465 in. diameter.

These proportions give an inlet valve area of 24.8 sq. in., which is 26.5 per cent of the piston area, and is equivalent to a flow value of some 15.3 h.p./sq. in. of valve area, a figure which is interesting to compare with the 9.7 h.p./sq. in. of the unblown 1922 3-litre Vauxhall, and which is even superior to the 15.1 h.p./sq. in. of the 1949 supercharged Ferraris which had a manifold pressure of 1.6 ata.

Each valve is closed by twin hairpin-type springs having ten effective coils of 1.26 in. diameter with a wire thickness of 0.157 in., and these must impose somewhat heavy loading on the rockers which are used in conjunction with the single overhead camshaft provided for each bank of cylinders.

The camshaft drive is by chain from the front end of the crankshaft, the latter running in seven Vandervell three-layer bearings which are indium plated and of 2.36 in. diameter. This type of plain bearing was first used on the smaller engines after exhaustive bench and road tests had shown that they not only had equal reliability and greater length of life but also produced an observable increase in mechanical efficiency. A similar type of bearing is used for the 1.73 in. diameter big ends, and attention should perhaps be drawn to the fact that the crank pins are only 55 per cent the diameter of the cylinder bore and the bearing area must be considered as rather on the small side taking into account the size of the pistons, the crank r.p.m. and the piston speed.

The light alloy pistons are steeply domed and provide choices of compression ratio lying between 11 and 14.5 : 1 and they are attached to steel H-section connecting rods which lie side by side on the crank pins with the cylinder axes at the orthodox included angle of 60 degrees, the firing order being 1, 7, 5, 11, 3, 9, 6, 12, 2, 8, 4, and 10, ignition on the earlier models of the type being provided by two Marelli magnetos mounted vertically at the back of the block and driven from the back of the camshafts at the camshaft speed. On the prototype a single sparking plug was used with provision for 40 degrees advance, and the maximum engine power was approximately 330 h.p. at 6,500 r.p.m., equal to 3,160 ft./min. During 1951 the works cars appeared with two sparking plugs per cylinder, and in this form 380 h.p. was given at 7,500 r.p.m., which is the equivalent of 147 lb. sq. in. b.m.e.p. at 3,660 ft./min.

Three downdraught Weber carburetters receive air from an external scoop formed in the bonnet top and feed fuel into a water-heated manifold. The carburetters are of the double-choke type, so each jet assembly, in effect, feeds two ports.

An alcohol-benzol blend fuel is fed into the float chambers by twin Frimac pumps. One of these is driven from the front of the right-hand camshaft and, as it is fed under pressure by a larger pump unit, it is mounted on the right-hand frame member below the driver's seat and driven by belt from the propeller shaft. This first-stage pump in turn is fed under gravity from the fuel tank which is placed at the back of the car.

Lubrication is by wet sump with an external oil radiator. This is a very unusual arrangement for a racing engine, there being only one oil pump, which is a gear type transversely mounted at the nose of the crankcase. Delivery from the pump is partially through the oil radiator with a thermostat preventing delivery to the radiator core until a certain oil temperature is reached, and a spring-loaded relief valve controlling exit therefrom so that the oil cooling system is under very light pressure. Oil is delivered to the main bearings at 70 lb. sq. in. through a gallery pipe extending the whole length of the engine, from which there are take-offs to each of the seven main bearings with normal cross drillings into the crank pins. The ribbed sump contains two gallons of oil.

A metal multi-plate clutch is bolted on to the end of the crankshaft and the four-speed transmission unit is bolted together into one aggregate and mounted at the tail of the car. By using a pair of spur wheels for the final drive it is possible to have the centre line of the propeller shaft of the bevel wheels substantially below that of the two exposed half-shafts, each of which have two universal joints. These are of needle type and resemble closely in design the American Mechanics joint. Both the spur box and gearbox proper are split lengthwise on their centre line and a very wide range of final and indirect gear ratios can be provided. A typical set gives an overall engine : road wheel relationship of 3.9, 4.55, 5.6, and 9.2 : 1 and with the normally used 7.50 by 17 rear tyres there are resultant road speeds at 7,500 r.p.m. of 173, 148, 120 and 73 m.p.h. Very ample provision is made both for lubricating the train of gears and for adequate breathing from the gear cases without loss of oil therefrom.

The rear wheels are maintained parallel with each other and vertical with the road by a de Dion tube which is made in three parts, but does not require any provision

The final drive on the Ferrari is by means of spur gears, the right-angle drive being placed beneath the centre line of the half-shafts so that the gearbox and propeller shaft can conveniently be placed below the driver's seat. As shown below, the de Dion axle tube is located sideways by a centrally-mounted sliding member and each half-shaft has two universal joints.

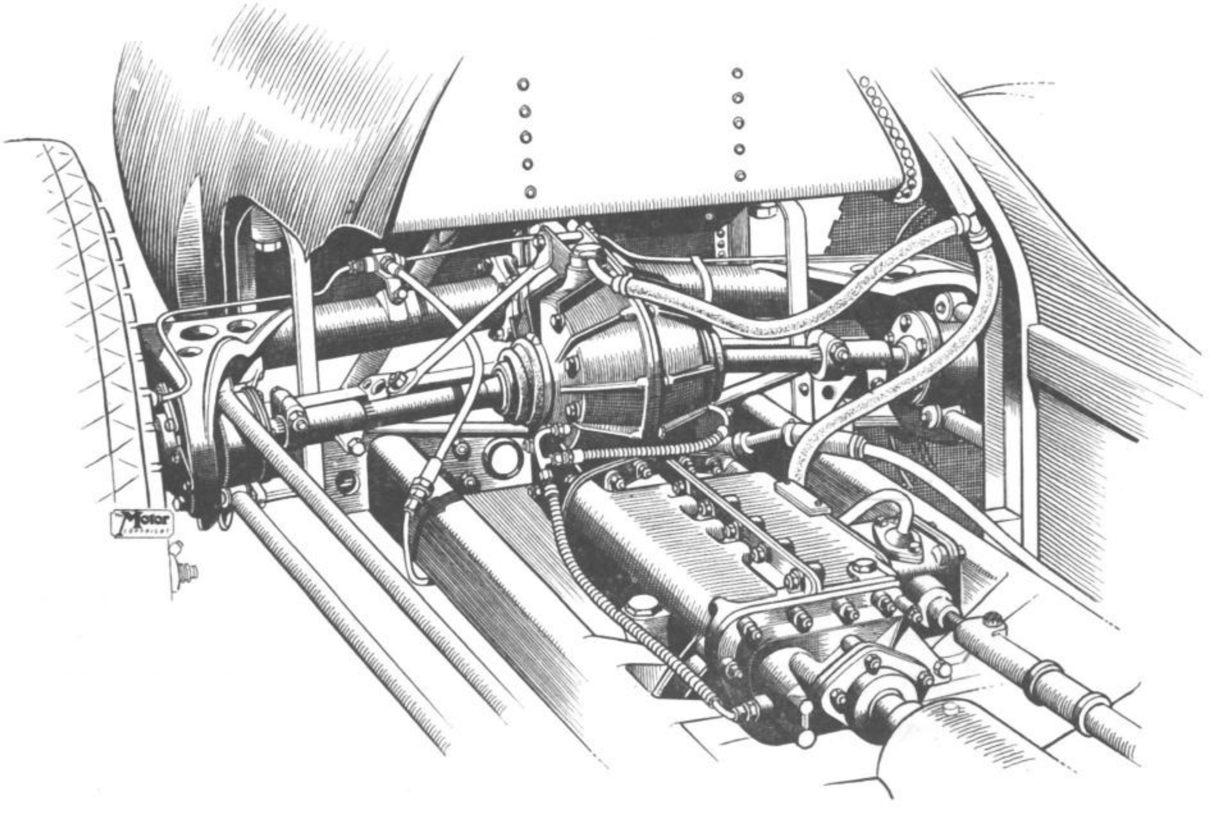

for oscillating movement of one side against the other, such as was provided on the pre-war German racing cars. This follows from the fact that the radius arms which drive the car and contain engine torque and brake reaction are formed in pairs and lie parallel one above the other in the same plane as the wheels.

The arms are 21.2 in. long between their pivots and the duty of locating the de Dion tube sideways is performed by a pad on the leading edge of the de Dion tube. This runs in a slot attached to the back of the transmission housing coupled with a roller on the trailing edge of the de Dion tube which engages with a slot fixed to a tubular arch extending between the extreme rear ends of the frame side tubes. This arrangement obviously assists the radius arms in maintaining the rear wheels square with the chassis, in addition to providing the normal resistance to side thrust.

The Ferrari de Dion tube is typical of the efforts which are made to keep the weight of the car down, for it has a wall thickness of only 2 mm. and a diameter of only 2.36 in. The suspension is, somewhat surprisingly, effected by a single transverse leaf.

The same arrangement is used at the front end of the car, the leaf connecting to the lower and longer link of a conventional wishbone layout.

Both the front and rear springs have six leaves, each 1.77 in. wide and 35.4 in. long, and the mounting of these springs on the chassis is such as to provide the maximum effective length. Damping is provided fore and aft by quite small vane-type hydraulic shock absorbers, but due perhaps to the relative stiffness of the suspension these are found to give excellent results over a complete racing season.

A conventional worm and wheel steering box is used, giving 1-7/8 turns from lock to lock, the steering box itself being located on the offside of the front cross-member and being joined to the central steering wheel by a long articulated steering column.

A conventional three-piece track-rod is used, a heavy drop arm pivoting around the left-hand side of the cross-member with a fixed track-rod connecting it to the steering arm proper. Short swinging arms connect to the steering pivots, the king-pin bearing being placed between the wishbones.

The frame has two parallel tubes as side-members, these being of rectangular section. The dimensions vary somewhat, but, approximately, the tubes are 4.7 in. deep and 2.25 in. wide. A round tube of 3 in. diameter provides cross-bracing between the clutch housing and the gearbox and torsional stiffness is further provided by a built-up plate at the front which also supports the suspension elements and steering gear and a further pierced built-up cross-piece lying immediately behind the two exposed half-shafts.

The outstanding feature of the hydraulic brakes of the two leading shoe type is the very marked projection of the drums from the wheel rims so that maximum air circulation can be provided around the periphery of the drum.

As with the Formula II racing cars, the two leading shoes have a central guiding member so that any servo shoe effect is almost eliminated. The front and rear pairs of brakes are worked from separate master cylinders and a point of particular interest lies in the forced ventilation provided for the brake drums. Radial air scoops are cast into the face of the drum (which is of light alloy with an inserted steel liner) and it has been established that the air flow provided by this means is a very effective way of reducing temperature both of the drum itself and of the shoes and brake linings.

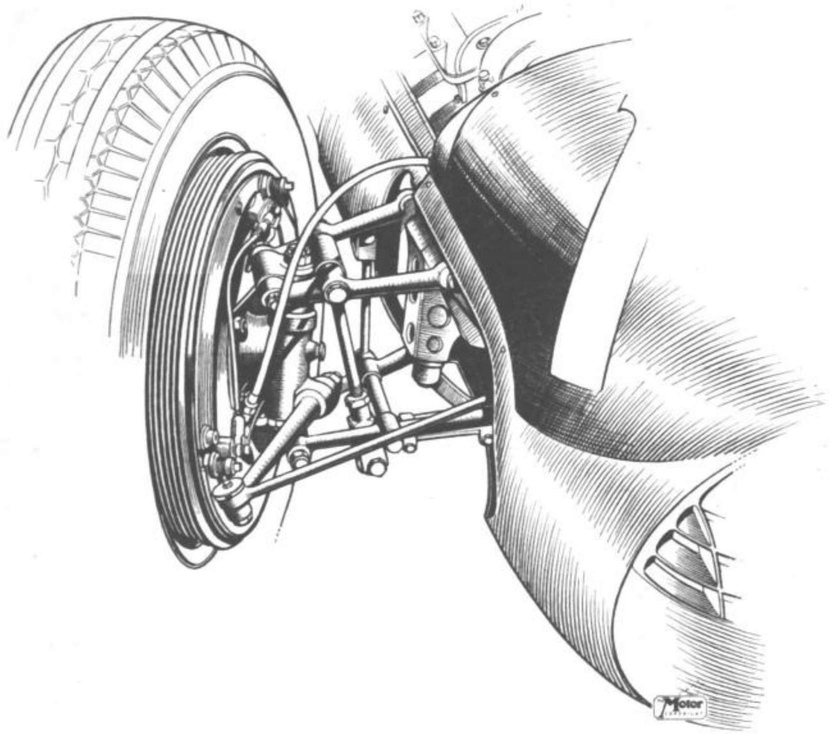

The front suspension of the Ferrari is by two unequal-length wishbones, a single transverse leaf spring being connected to the top arm by a link (as shown here) on earlier models and directly to the lower arm on the latest types. The drawing shows the considerable offset of brake drum and king-pin in relation to the tyre centre and the forward mounting of the three-piece trackrod system.

The 4½-litre Ferrari is a very handsome-looking car, the front end of which has a very over-shot appearance, the tail being as short as possible, consistent with the provision of 45 gallons of fuel. The very latest type which ran in the Grands Prix of Italy and Spain, in 1951, had an even more impressive aspect, obtained by noticeably raising the height of the scuttle and fitting a high backrest for the driver's head on the top of the tank.

For the Indianapolis race of 1952 and for the relatively few Formula I and *formule libre* races for which the works entered a car in 1952 and 1953, modifications were made to the engine, the frame and the general appearance. By detailed changes to the air intake and carburation layout the maximum power was raised to 430 b.h.p. and the bonnet line was lowered with the provision of a mid-bonnet air scoop intended to give some ram effect to the ingoing charge.

The tail of the car has also considerably altered so that the appearance of the 1952 and 1953 model, as shown in one of the plates, is considerably at variance with the 1951 Grand Prix model which is the subject of the cut-away drawing. A major mechanical change on the Indianapolis type car was a strengthening of the frame by welding a triangulated system of small diameter tubes on top of the normal side-members. This is also illustrated on a plate.

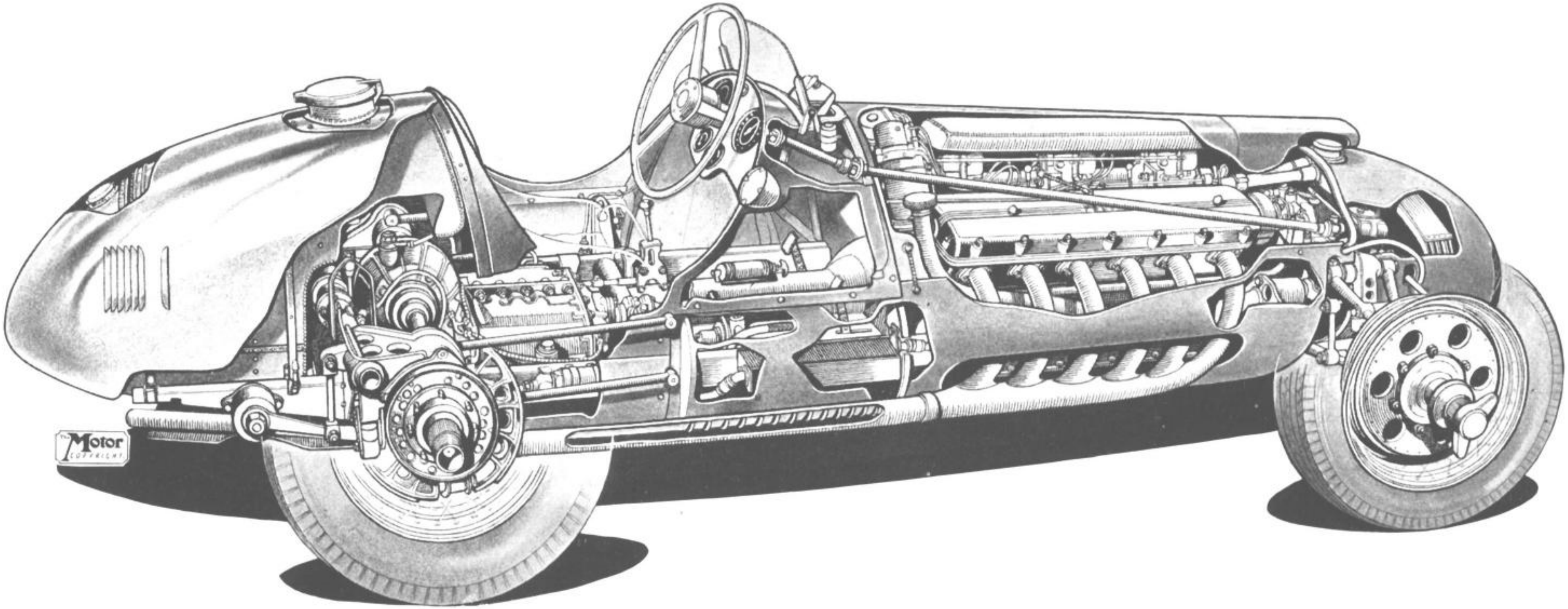

PLATF IV

EXAMPLE No. EIGHTEEN

T H E 4½-litre FERRARI

The 4½-litre Ferrari depicted here is a 1951 type modified by fitting Girling brakes. The drawing shows how the V.12 engine is placed far back in the tubular frame with the four-speed gearbox mounted beneath the driver's seat. The de Dion axle tube is located by two parallel radius arms on each side, which makes possible a non-articulated de Dion tube.

DETAILS OF CAR

MAKE.-Ferrari
TYPE.-Formula I Grand Prix car
YEAR OF CONSTRUCTION.-1950-53
YEARS RACED.-1950-53
DESIGNER.-Aurelio Lampredi
WHEELBASE. -7 ft. 8 in.
FRONT TRACK.- 4 ft. 3½ in.
REAR TRACK.- 4 ft. 3 in.
FRONTAL AREA.-10.75 sq. ft. with driver
UNLADEN WEIGHT.- 16 cwt.
ALL-UP STARTING LINE WEIGHT.-20.75 Cwt.
MAXIMUM SPEED.-175 m.p.h.
SPEED ON INDIRECT GEARS.-148 m.p.h. on Third ; 120 m.p.h. on Second ; 73 m.p.h. on First
H.P. PER SQ. FT.-32.3
H.P. PER TON UNLADEN.-485
H.P. PER TON ALL-up.-366
BORE.-80 mm.
STROKE.-74.5 mm.
STROKE : BORE RATIO.- 0.93 : 1
PISTON AREA.-93.6 sq. in.
H.P.-380 at 7,500 r.p.m.
H.P. PER SQ. IN. OF PISTON AREA.-4.06
B.M.E.P.-147 lb./sq. in.
PISTON SPEED.-3,660 ft./min.
CYLINDER HEAD.-Light alloy, cast with block
VALVES NO.-Two per cylinder
VALVES ANGLE.-60 degrees
VALVE AREA.-Inlet : 24.8 sq. in. ; Exhaust : 20.2 sq. in.
CYLINDER BLOCK.-Wet cylinder liners screwed into cylinder head inserted into water jackets formed in crankcase
FUEL.-Petrol/Benzol/Alcohol mixture
CARBURETTERS.-Three Weber
SUPERCHARGER.-Nil
MANIFOLD PRESSURE.- One Ata.
IGNITION.-Two Marelli magnetos
PLUGS NO.-24
PLUGS LOCATION.- At side of combustion chamber
CRANKCASE.-Light alloy casting with light alloy sump added
CRANKSHAFT.-One-piece
MAIN BEARING NO.-Seven
MAIN BEARING TYPE.-Vandervell three-layer thin-wall
BIG END TYPE.-Vandervell three-layer thin-wall
LUBRICATION.-Wet Sump
CAMSHAFT LOCATION.-One overhead camshaft per bank
VALVES OPERATED.-By rockers
CAMSHAFT DRIVE.-Roller chain
CAMSHAFT DRIVE LOCATION.-Front of engine
CLUTCH.-Single-plate
GEARBOX LOCATION.-In unit with rear axle drive
GEAR RATIOS.- 3.9 ; 4.55 ; 5.6 ; 9.2 : 1 ; other ratios available
TRANSMISSION.-By shaft running below hub centre to four-speed and bevel box with final drive by spur wheels to two exposed half-shafts each with two Hooke type universal joints
FRAME.-Rectangular tube
FRONT SUSPENSION.-unequal-length wishbones with transverse leaf spring
REAR SUSPENSION.-de Dion axle located sideways by two sliding members with drive and torque reactions contained by two parallel radius arms at each side of the car
SHOCK ABSORBERS.-Houdaille Vane type hydraulic
BRAKE SYSTEM.-Hydraulic
BRAKE DRUM DIAMETER.-14 in. internal
FRICTION LINING WIDTH.-2.24 in.
SQ. IN. OF DRUM PER LADEN TON.-376 sq. in.
WHEELS.-Rudge detachable
TYRES.- Pirelli 6.00 by 16 front ; 7.50 by 17 rear

FORMULA I RACING RECORD FERRARI 4½-LITRE

Date	*Event*	*Course*	*Average Speed m.p.h.*	*Lap Speed m.p.h.*
16/8/51	Pescara	Pescara	85.32	88.86
29/10/50	Penya Rhin	Pedralbes	93.8	98.2 (P)
17/6/51	Belgian Grand Prix	Spa	112.20 (2nd)	117.5 (P)
7/51	European Grand Prix	Rheims	110.5 (2nd)	117.95 (P)
14/7/51	British Grand Prix	Silverstone	96.11	100.65 (P)
29/7/51	German Grand Prix	Nürburg Ring	83.76	85.69 (P)
27/5/51	Swiss Grand Prix	Berne	87.4 (3rd)	102.2 (P)
16/9/51	Italian Grand Prix	Monza	115.53	122.5 (P)
28/10/51	Spanish Grand Prix	Pedralbes	98.6 (2nd)	108.1

EXAMPLE No. NINETEEN

The Formula I B.R.M.

ALTHOUGH the B.R.M. entered but four Formula I races between 1947 and 1951 (1950 British Grand Prix and Penya Rhin, and 1951 British and Italian Grands Prix), although it left the starting line in only two of these events, and although it finished in only one of them, it can, nevertheless, claim to be the car with the highest theoretical performance within the framework of the Formula I regulation and, theory apart, in timed tests at Monza it reached a higher maximum speed on some parts of this circuit than the 1951 Alfa Romeo and raced on generally level terms with the 4.5-litre Ferrari in the minor races of 1952 and 1953.

In 1939 the triumvirate, Humphrey Cook, Raymond Mays and Peter Berthon, who had been responsible for the highly successful E.R.A. models of 1934-38, was broken up, but during the ensuing wartime years Mays and Berthon remained in close association and enjoyed a common aim. This was to put the British automobile industry " on the map " in the realm of Grand Prix racing in the immediate post-war years.

The Grand Prix Formula reigning in 1938 and 1939 had received somewhat meagre support, and before the outbreak of war the possibility of a 1½-litre limit for Grand Prix racing had been freely discussed. Mays and Berthon therefore took this as a starting point in making some general investigations during the war years and, acting upon theoretical considerations which will be considered in detail in another chapter, they concluded that the correct solution to the problems posed by a 1½-litre limit was to be found in a V.16 engine with a centrifugal blower, driving an offset and diagonal propeller shaft connected to a spur type gearbox and final drive set across the back of the frame.

By this means it would be possible to obtain a piston area of 48 sq. in. offering, at accepted standards, an output of up to 480 b.h.p. This could be coupled with a frontal area of 9½ sq. ft. giving 50 h.p./sq. ft. of frontal area-a figure superior not only to that achieved on any known or potential 1½-litre car, but also substantially in excess of the 39 h.p./sq. ft. on the 1939 3-litre Grand Prix cars.

A decision to embark upon the design and construction of a vehicle of this kind could be justified only on the basis of the long-term benefits which were likely to accrue, given a substantial support, both physical and financial, for the venture. An alternative would have been to lay down a type having a Vee-8 engine supercharged by a Roots or Vane type compressor with a unit gearbox driving to a rear axle of the live or swing axle type. Using known technique, such an engine could have given 300 h.p. with reliability early in its life, and could have been developed to a limit of about 380 b.h.p. and about 36 h.p./sq. ft. of frontal area. Its overall racing history could have been estimated as follows :

1946-mid-1947	Design and construction
Mid-1947-end 1947	Appearance of prototype
1948	Commence team racing
1949	Design at peak of efficiency and success

1950	Design obsolescent
1951-2	Obsolete

The time picture for a complicated engine capable of development up to 600 b.h.p. and mounted in a relatively intricate chassis could be reckoned thus:

1946-9	Design and construction
1949	Trials with prototype
1950	Commencement of team racing
1951-2	Design at peak of development

In both cases one might reasonably expect occasional victories in 1950, but with the more complex design this should have been followed by increasing technical dominance in Grand Prix racing right up to the end of 1952. This was an obviously more desirable state of affairs from the point of national prestige and propaganda than a steady succession of losses in these years, leading to the withdrawal of the team from international competition.

Unfortunately, although the B.R.M. directors made the correct strategic decision in deciding to build a car which could offer increasingly competitive performance, the design and production stage took much longer than was at first estimated. Moreover, owing in part to limits on the financial and physical support enjoyed, and in part to certain errors in the policy followed, the whole development programme was delayed by approximately two years, and the car reached its zenith when Formula I racing was superseded for the Grandes Epreuves by races for unsupercharged cars of lesser swept volume.

The power unit is noteworthy for the use of sixteen cylinders, each having a capacity of only 93 c.c., the bore and stroke each being less than 2 in. This means that the crank throw is less than 1 in. and the cylinder block and crankcase proper are quite overwhelmed, when viewing the engine, by the cylinder heads and valve gear, and the ingenious arrangement for auxiliary drives. This may best be appreciated by stating that the main casting is under 31 in. long, 13½ in. wide, and only 7 in. deep, whilst the base is some 10 in. deep, and the cylinder heads are about 10 in. wide.

The cylinders are arranged in four separate groups, two on each side of the crankshaft, and their axes are inclined at an included angle of 135 degrees. This arrangement gives even firing order, keeps down the overall height of the engine to a minimum and at the same time lifts the cylinder heads above the level of the frame tubes, which they might have fouled if a flat engine having horizontally opposed cylinders had been used. The top half of the crankcase is a one-piece light alloy casting which provides the water jackets for all the cylinders and the supports for the ten main bearings (eight of which are of the Vandervell thin-wall three-layer type) in which the two-piece, eight-throw, Nitralloy crankshaft runs.

Beneath this main casting is a deep magnesium alloy sump containing a sub-shaft, and it seems appropriate to commence a detailed analysis of the engine with a description of this unique feature. As can be seen from the sectional and perspective drawings, the clutch is attached to a shaft of which the centre line is 4 in. below the centre line of the crankshaft. This sub-shaft is 1.2 in. diameter and supported in three ball bearings. It not only drives the car but also, through the intermediary of two skew gears, the pressure and scavenge pumps for the lubricant and the water pumps.

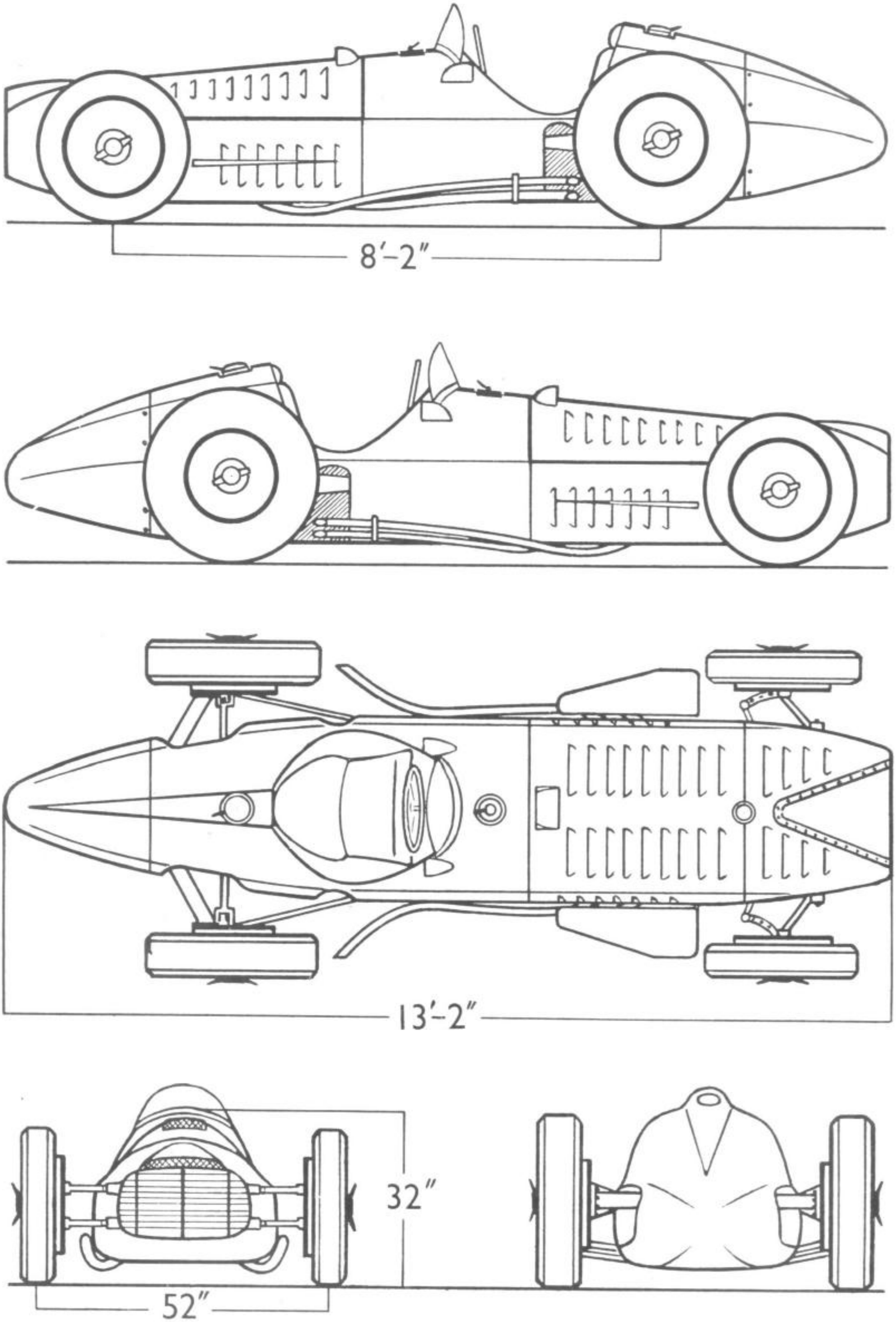

The 1953 Formula 1 sixteen-cylinder B.R.M. to scale of 1 : 30.

In the rear section of the sump a transverse shaft driven by the skew gear extends to the left-hand side of the engine and is supported in two plain bearings. Keyed to it and mounted inside the sump is a pressure oil pump, and mounted externally to the crankcase is a centrifugal water pump. On the right-hand of the crankcase a separate transverse shaft is driven through a dog, and mounted upon it is a scavenge oil pump, both oil pumps being of the gear type of the same diameter (3¼in.) but the scavenge pump gear teeth being 0.75 in. wide, whereas the pressure pump is 0.45 in. In the forward section of the sump an exactly similar arrangement is found, but with drive and mounting in the opposite sense.

Mounted beneath this driving shaft is a second torsionally-resilient sub-shaft running forwards and engaging with a pre-set friction clutch which forms the first stage in a train of gears driving the supercharger. This shaft is driven from the main sub-shaft at twice the rotational speed thereof by two sets of spur gears.

This, in fact, brings the supercharger drive shaft back to crankshaft r.p.m., for the clutch shaft is itself driven at half engine speed from two gear wheels placed in the centre of the two-piece crankshaft. There are roller bearings on each side of these gear wheels, and each section of the crankshaft is further supported in four Vandervell main bearings, the journals being 2.3 in. diameter and the crank pins 1.5 in. Both sections are made from E.S.C. Nitralloy and are counter-balanced by inserts of G.E.C. heavy metal.

The main bearing caps are spigoted into the crankcase (which is a casting in RR 50 alloy), located by dowel pins and pulled up by long through bolts which emerge through the top face of the main casting. This casting is stiffened sideways by tie rods which pass transversely through the main bearing caps.

The detachable cylinder bores are spigoted into the crankcase with a bottom sealing joint and are made of cast-iron, with a double diameter flange on their top face which engages with a correspondingly shaped recess in the light alloy cylinder heads.

There are four separate heads, each containing four hemispheres with two unequally sized valves with an offset masked Lodge sparking plug. Each head also supports two camshafts which operate the valves through rocking fingers with hairpin valve springs ; both valves are pulled down on to seat inserts and the smaller exhaust valve has a hollow stem with sodium assisting the heat transfer into the finned exhaust valve guide which is in direct contact with the circulating water.

The Y alloy pistons give a compression ratio of about 6 : 1, carry three compression rings and have a somewhat lowly positioned gudgeon pin which has a diameter of 15 mm., or approximately 30 per cent of the cylinder bore. The connecting rods are of nickel-chrome steel and although they are of conventional proportions they are only 4.125 in. long absolutely. There are two rods lying side by side on each crank pin, the offset between the cylinder axes being 16 mm., and as with the big ends the bearings are of the Vandervell three-layer type. With a length : diameter ratio of only 0.27 : 1 they are exceptionally narrow, but excellent results have been obtained throughout the whole life of the engine despite the use of abnormally high rotational speeds.

This is the more remarkable in that the high ratio between piston area and oil cooling area resulted in oil temperatures of up to 140 degrees C. being encountered in normal racing.

The pressure pump supplies 20 gallons of oil per minute at a pressure between 50 and 70 lb. per sq. in., the former figure being a minimum. Great emphasis is placed upon the supply of clean oil and a Tecalemit filter is embodied in the circulating system. An interesting feature of the latter is the adoption of the Rolls-Royce practice of end feed through the crankshaft to the big end bearings, the shaft being irrigated through circumferential grooves in the centre and two end bearings. The main bearings in this arrangement are supplied through separate delivery pipes, the oil escaping from them to be picked up by the scavenge pump.

S.A.E. 30 oil is used, B.P. Energol having been selected in 1952 and used thereafter.

This account of the constructional aspect of the engine may be closed with a reference to the camshaft drives which consist of a train of four spur wheels located on a carrier between the two cylinder blocks. Ignition is provided by Lucas coil and distributor, there being four of the latter, each driven from the nose of a camshaft and supplying current to four plugs. Each distributor has three contacts, one to open, and one to close the circuit, and a third which can be selected to provide a retarded spark when starting.

At maximum engine r.p.m. the formidable number of 85,000 sparks per minute has to be delivered, the firing order being : 1, 10, 6, 13, 2, 16, 5, 11, 8, 15, 3, 12, 7, 9, 4, 14.

The reasons for choosing a two-stage centrifugal blower and the effect of the inherent delivery characteristics of such a unit on the overall performance of the engine are discussed elsewhere. In this description it will suffice to record that the unit is of Rolls-Royce design and manufacture, and that it is mounted on the nose of the crankcase, being driven at over four times engine speed and delivering fuel/air mixture at approximately 70 lb./sq. in. or 5.7 ata. Despite this very high air delivery the component has an overall length of under 5 in. and a maximum diameter of 12 in. From the viewpoints of weight and ease of installation the use of a centrifugal blower cannot, therefore, be challenged and at the same time very high adiabatic efficiencies are recorded at peak speed and pressure-an important factor when it is realised that a 1 per cent variation in blower efficiency can affect net engine output by 5 per cent or more.

Although originally designed to use fuel injection, the car as raced has drawn mixture from two horizontal S.U. carburetters which are in turn supplied with fuel by a Pesco mechanical pump. Mixture is discharged into a single feed pipe running between the cylinder blocks, this having two offtakes on each side into cast manifolds supplying the four inlet ports per cylinder head.

Even on early trials, in 1949, the B.R.M. engine delivered over 400 h.p., representing an output of 8.6 h.p./sq. in. of piston area, and a b.m.e.p. of over 330 lb./sq. in. At this stage therefore it showed 26 per cent gain in b.h.p. per litre over rival six- or eight-cylinder engines, an achievement following a crankshaft speed of over 10,000 r.p.m. in place of *circa* 7,000 r.p.m., which was the limit for engines with larger diameter cylinders and longer piston travel. In the course of development over four years, supercharger speeds and pressures were steadily raised on the B.R.M. so that when operating on a full boost of 5.7 ata. the engine output came up to 412 b.h.p. at 9,000 r.p.m., to 525 b.h.p. at 10,500 r.p.m. and to 585 b.h.p. as an absolute maximum, this last figure determined by the limit on air flow of available carburetters.

Taking the 1953 figure as a basis of calculation, the engine was giving 11 b.h.p. per sq. in. at 3,300 ft./min. piston speed, with a b.m.e.p. of 434 lb./sq. in.

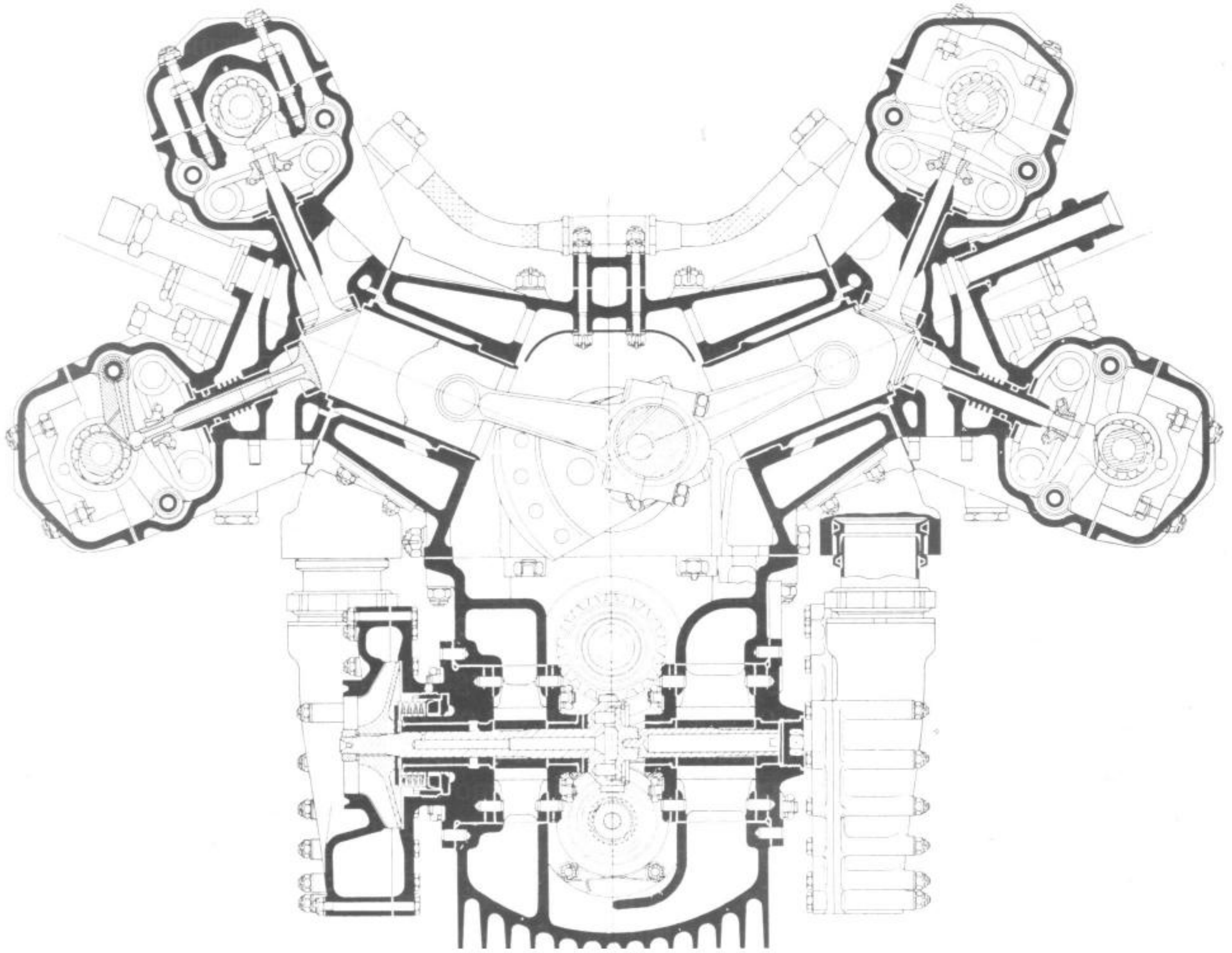

Many of the leading features of the B.R.M. engine are shown in this cross-section, including the hairpin-type valve springs, sodium-cooled exhaust valves, detachable cylinder heads and wet cylinder sleeves. The crankshaft drives the central intermediate shaft shown in the deep base chamber, the lower of the three shafts running forward to provide the supercharger drive. Two transverse shafts drive internally-mounted pressure scavenge and oil pumps and external water pumps. Scale 1 : 4.

Impressive as these figures are absolutely, they are lower than one might expect in relation to the very high supercharge pressure and the relatively small power absorbed by the blowers. The figure of 26.75 h.p./sq. in. of inlet valve area at 5.7 ata. certainly compares unfavourably with the 18 h.p./sq. in. at 2.45 ata. achieved on the 1939 Mercedes-Benz. It would appear, therefore, that the small size of the cylinders, although advantageous from a mechanical point of view, is a disadvantage from a volumetric standpoint owing to excessive interference with flow due to the interposition of valve stems, valve guides and so on.

The entire power unit is set in the frame with the axis of the crankshaft inclined downwards and sideways so that the propeller shaft passes to the left of the driver's seat, which can accordingly be placed in the centre of the car and barely 4 in. above ground level.

A multi-plate clutch is attached to the rear end of the sub-shaft, the plates being 7½ in. diameter with Ferodo lining attached to four driven plates not only by rivets but also by a Redux synthetic bond. By the use of bob weights centrifugal force augments the pedal pressure, the torque carried through the clutch being twice the engine torque, due to the fact that it is running at half crankshaft speed.

An open propeller shaft carries the drive to a centre bearing mounted on the cross-member of the chassis placed just ahead of the driving seat. To protect the driver the shaft is enclosed as it passes through the cockpit on the left-hand side of the seat to right-angled gears placed at the extreme left of the car.

The 1 : 1 bevel gears are mounted on the extreme left-hand side on a split light alloy casting measuring 20 in. long and 8½ in. wide, which supports in five bearings two transversely mounted shafts which give five forward speeds and also drive the exposed half-shafts through the medium of a pair of spur wheels and a Z.F. limited slip differential. The final spur wheel is enclosed in a detachable light alloy casting and the entire assembly (which is three-point mounted on the frame) gives support to two steel faces in which a bronze block slides to give axial support for the rear axle. With this transmission arrangement a very wide choice of ratios is available, typical gearing for the final stage giving 16.5 m.p.h. per 1,000 r.p.m. and 95, 115, 130, 165 and 190 m.p.h. on the various ratios. The unit scaled 162 lb. complete.

The whole of the transmission and rear-end layout of the car is obviously derived from pre-war Mercedes-Benz practice, the gearbox closely resembling the type shown on page 231 and in cross-section in Chapter XXII.

The de Dion rear axle and radius arms also resemble closely the layout described in detail in Volume I Example No. 16 and subsequently used by Mercedes-Benz on their 1938-9 3-litre Type W.163 models and their 1939 1½-litre Type W.165.

The separately machined hubs are mounted upon straight axle tubes which are in turn bolted on to a centre piece which permits one side of the axle to oscillate slightly in relation to the other, and which further provides a mounting for the central sliding bronze block. The axle beam is located in a fore and aft direction by a radius and torque arm on each side ; these are inclined slightly inwards, to pivot points mounted on the top part of the frame. Each wheel is driven by an exposed shaft having a de Dion pot-type joint on the inner end and a normal Hooke joint at the outer end, and with this layout it is unnecessary to use a splined shaft.

Two Lockheed air struts are placed between the de Dion tube and the frame, and these embody hydraulic damping arrangements so that both functions are discharged at a weight penalty of under 4 lb. per spring.

Lockheed air struts are also used at the front of the car, which has Porsche type trailing arms with the front wheels connected thereto by the usual ball joints.

Each arm is supported in a light alloy casting on needle roller bearings, the arms themselves being 8 in. between centres and splayed outwards at 50 degrees. In the first instance the Lockheed struts were moved by a short crank placed inboard of the mounting bracket and connected to the upper trailing arm. In order to increase the stroke of the strut it was later connected to the bottom arm at some distance from the front pivot thereof. These springs offer a variable rate, and cannot therefore be directly compared with the more othodox type but although mechanically, the limits of motion on the front wheels permit a travel of 6 in. (and on the rear wheels of 7 in.) the springs were adjusted to give a movement of about two-thirds of these figures.

A proprietary worm and nut box is connected to the steering wheel by the medium of a universally jointed shaft and connects with a short cross rod and then to substantially longer swinging half-track rods inclined backwards through a considerable angle. There are 2¼ turns from lock to lock.

The frame, which has been developed in collaboration with Messrs. Rubery, Owen, is a unique construction for racing cars. It consists of tubular side-members of 2½ in. diameter, one placed above the other and joined by liberally pierced side plates. A single tube unites the front of the frame and there is a further cross-member immediately ahead of the driver's seat and two more immediately ahead of, and behind, the gearbox. The arrangement gives great beam stiffness, but owing to the comparatively great length of the engine-cum-blower and clutch assembly which is mounted at three points, there is little in the way of transverse stiffening over the front two-thirds of the structure. The weight with brackets was 196 lb.

For Formula I races Girling brakes of the three-shoe type were used, the layout being such that the servo effect provided by each shoe was almost non-existent. This, in conjunction with cast-iron brakes, was intended to produce optimum stability of braking throughout on long-distance events, and although the drums were of only 14 in. diameter and somewhat enclosed within the wheel rims, air circulation was enhanced by the elimination of the usual back plate, the shoes being supported by light alloy spiders. In order to maintain the pedal effort within a reasonable figure, a hydraulic servo motor was driven from the engine to augment the pedal effort.

The presence of this servo motor was particularly welcome when it was decided that for the races of 1952 and 1953 the cars should be equipped with Girling disc brakes in place of the orthodox drum type. With this layout a chromium-plated steel disc is pinched by comparatively small diameter pads which are mounted in a light alloy carrier. Three opposed pads are used for each front wheel and two opposed pads for each back wheel, and with this arrangement the brakes themselves have no self-servo effect.

There is a slight saving in unsprung weight, but the most important advantage derived from the change is a virtual immunity from fade, giving complete consistency of braking throughout an event. Another noticeable aspect is very even braking effort, as there are no irregularities caused by drum distortion or eccentric mounting.

Dealing now with the auxiliaries, the light alloy radiator is placed at the extreme nose of the car and below the level of the cylinder heads and the separate offtakes above each combustion chamber are, therefore, connected by a Y pipe on each side of the engine to a pressurised header tank mounted forward of the fire-proof bulkhead. The oil cooling radiator is placed beneath the water cooling core and oil is contained in a four-gallon tank mounted between the engine and the left-hand side-member of the frame.

The fuel is contained in a 15-gallon tank behind the driver's seat, but the main supply of 25 gallons is carried in a saddle-tank formed in the scuttle. Due to the general construction of the car the height is exceptionally low, as is the frontal area, but with the comparatively large brake horse-power available the front air intake has necessarily

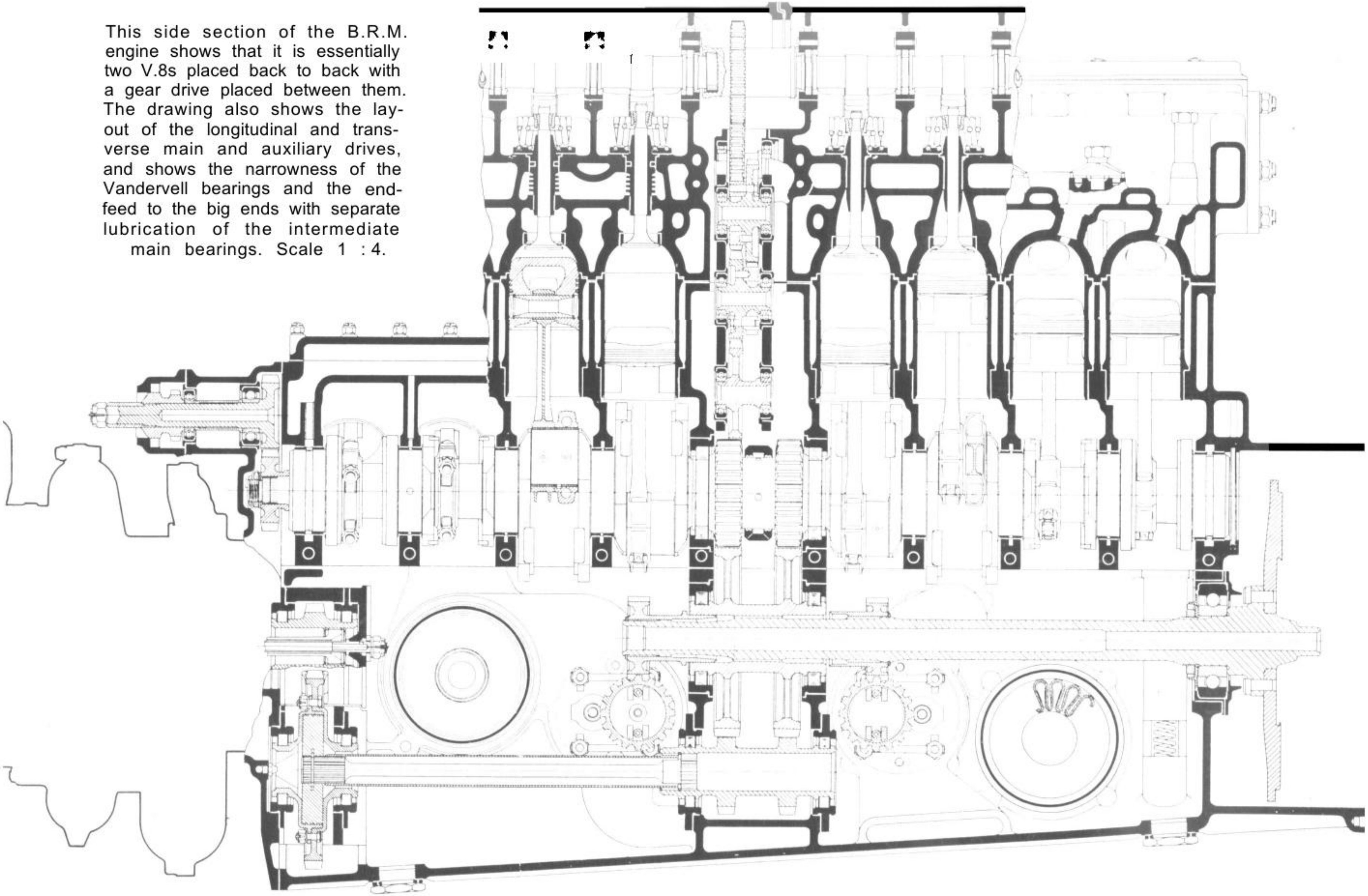

This side section of the B.R.M. engine shows that it is essentially two V.8s placed back to back with a gear drive placed between them. The drawing also shows the layout of the longitudinal and transverse main and auxiliary drives, and shows the narrowness of the Vandervell bearings and the end-feed to the big ends with separate lubrication of the intermediate main bearings. Scale 1 : 4.

to be comparatively large. The whole car had originally, however, a very smooth outline and it is evident that the maintenance of really smooth air flow at high speed had been in the forefront of the designer's mind.

The frontal aspect of the car was changed, indeed one might say mutilated, in 1952 and 1953, in order to increase the air flow through the radiator and beneath the bonnet. The original graceful ellipse at the front end of the car was enlarged to the rectangle shown in the perspective drawing and a substantial air scoop was superimposed.

Considerable changes were also made with the exhaust system for the Formula I races of 1950 and 1951. Two pipes leading from the front and back set of four cylinders on each side were merged into one long tail pipe of somewhat smaller diameter. In the next two years experiments with stub pipes had to be abandoned owing to intolerable noise, and a more common arrangement was two separate pipes splayed out and cut off just ahead of the rear wheels. In some cases a single pipe was used for the last foot or two with a bell at the end.

A further mechanical change was the substitution of braced radius rods for the pressings originally used to locate the rear hubs-a modification which did not affect the principles or geometry of the rear suspension.

PLATE V

EXAMPLE No. NINETEEN

THE 1952 B.R.M.

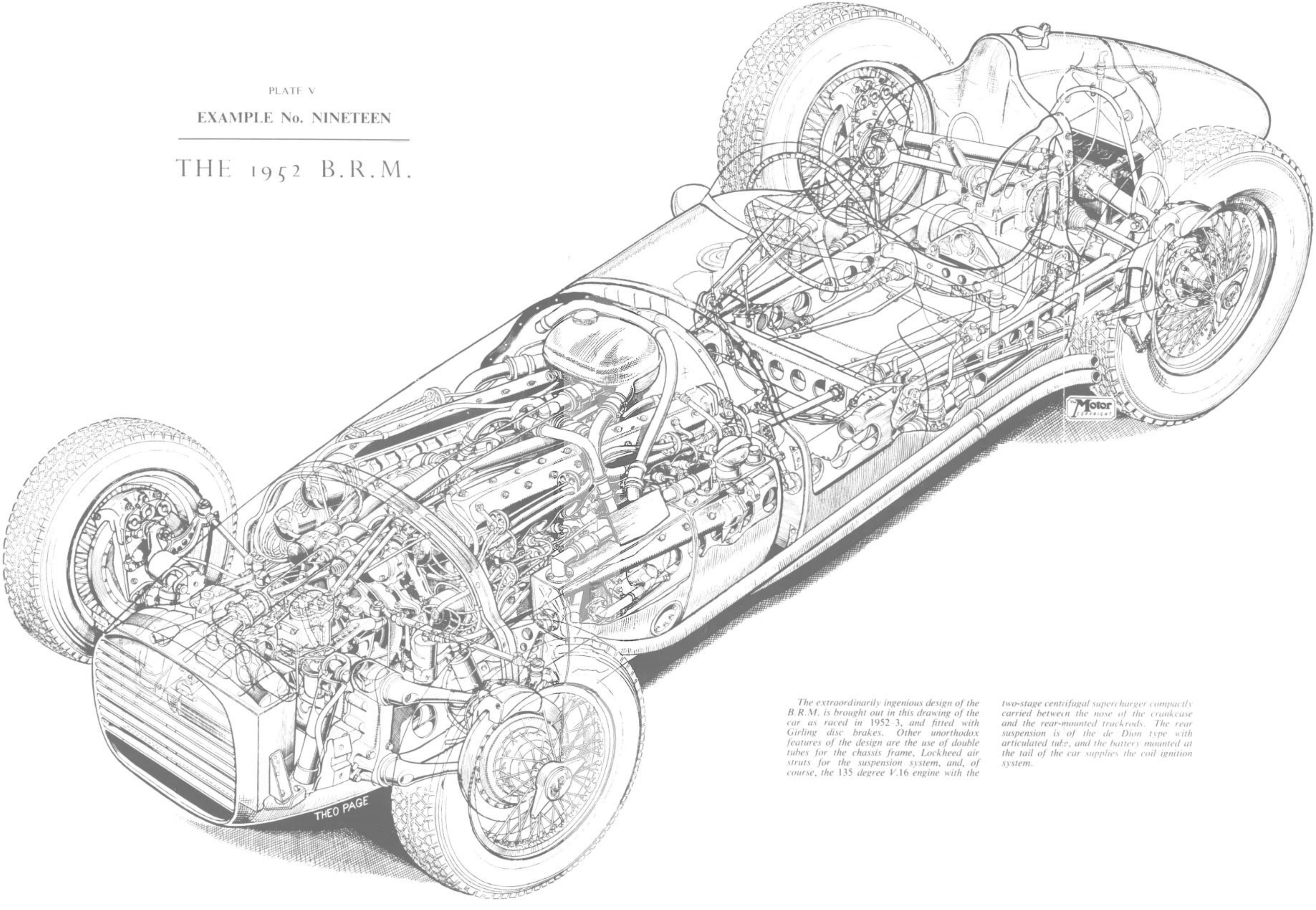

The extraordinarily ingenious design of the B.R.M. is brought out in this drawing of the car as raced in 1952–3, and fitted with Girling disc brakes. Other unorthodox features of the design are the use of double tubes for the chassis frame, Lockheed air struts for the suspension system, and, of course, the 135 degree V.16 engine with the two-stage centrifugal supercharger compactly carried between the nose of the crankcase and the rear-mounted trackrods. The rear suspension is of the de Dion type with articulated tube, and the battery mounted at the tail of the car supplies the coil ignition system.

DETAILS OF CAR AS COMPETING 1950-1 *

MAKE.-B.R.M.
TYPE.-Formula I Grand Prix car
YEAR OF CONSTRUCTION.-1949-53
YEARS RACED.-1950-3
DESIGNER.-P. Berthon
WHEELBASE.-8 ft. 2 in.
FRONT TRACK.-4 ft. 4 in.
REAR TRACK.-4 ft. 3 in.
FRONTAL AREA.-9½ sq. ft.
UNLADEN WEIGHT.-16 cwt.
ALL-UP STARTING LINE WEIGHT.-20 Cwt.
MAXIMUM SPEED.-190 m.p.h.
SPEED ON INDIRECT GEARS.-165 m.p.h. on Fourth ; 130 m.p.h. on Third ; 115 m.p.h. on Second ; 95 m.p.h. on First
H.P. PER SQ. FT.-55.2
H.P. PER TON UNLADEN.-535
H.P. PER TON ALL-UP.-430
BORE.-49.53
STROKE.-47.8
STROKE : BORE RATIO.-0.965 : 1
No. OF CYLINDERS.-Sixteen
PISTON AREA.-47.8 sq. in.
B.H.P.-430 at 11,000 r.p.m.
H.P. PER SQ. IN. PISTON AREA.-9.0
B.M.E.P.-340 lb./sq. in.
PISTON SPEED.-3,450 ft./min.
CYLINDER HEAD.-Four detachable light alloy castings
VALVES NO.-Two per cylinder
VALVES ANGLE.-90 degrees
VALVE AREA.-Inlet 19.63 sq. in. ; Exhaust 15.2 sq. in.
CYLINDER BLOCK.-Water jackets formed in one piece with upper half of crankcase with inserted detachable cast-iron liners set at an included angle of 135 degrees
FUEL.-Petrol/alcohol mixture
CARBURETTERS.-Two horizontal S.U.
SUPERCHARGER.-Rolls-Royce two-stage centrifugal
MANIFOLD PRESSURE.-4 ata.
IGNITION.-Lucas coil with four Lucas distributors
PLUGS No.-Sixteen
PLUGS TYPE.-Lodge
PLUGS LOCATION.-Offset on centre line of combustion chamber
CRANKCASE.-Two light alloy castings vertically divided
SUMP.-Single light alloy casting supporting auxiliary and final drives
CRANKSHAFT.-Two-piece, counter-balanced
MAIN BEARING No.-Ten
MAIN BEARING TYPE.-Two roller and eight Vandervell three-layer thin-wall
BIG END TYPE.-Vandervell three-layer thin-wall
LUBRICATION.-Dry sump with four-gallon oil tank and end feed to crankshaft at 50/70 lb./sq. in.
CAMSHAFT LOCATION.-Two o.h.c.s. per cylinder head
VALVES OPERATED.-Through rocking followers
CAMSHAFT DRIVE.-By train of gears
CAMSHAFT DRIVE LOCATION.-Centre of engine
CLUTCH.-Multi-plate mounted on half engine speed sub-shaft driven by gears from centre of crankshaft
GEARBOX LOCATION.-In unit with rear axle drive
GEAR RATIOS.-According to course
TRANSMISSION.-By two-piece propeller shaft to 1 : 1 right-angle drive through all-indirect gears and final spur wheels to two exposed halfshafts with inboard de Dion and outboard Hooke type universal joints
FRAME.-Side-members of double tube with spacers and four cross-members
FRONT SUSPENSION.-Porsche type trailing arms with Lockheed air struts
REAR SUSPENSION.-de Dion axle with split axle tube located sideways by central sliding member with drive and torque reactions contained by single arms located on chassis frame. Lockheed air struts
SHOCK ABSORBERS.-None
BRAKE SYSTEM.-Girling hydraulic servo
BRAKE DRUM DIAMETER.-Girling three-shoe or disc type brake (post-1951)
WHEELS.-Dunlop detachable
TYRES.-Dunlop 5.25 by 18 front ; 7 by 17 rear

---

* *Vide* Chapter XXII for subsequent statistics.

FORMULA I RACING RECORD B.R.M.

Date	*Event*	*Course*	*Average Speed m.p.h.*	*Lap Speed m.p.h.*
26/8/50	International Trophy	Silverstone	(a)	—
29/10/50	Penya Rhin	Pedralbes	(a)	94.9
14/7/51	British Grand Prix	Silverstone	90.5 (Sth.)	94.5
16/9/51	Italian Grand Prix	Monza	(b)	120.4 (P)

(a) Non-Starters.
(b) Non-Finisher.

CHAPTER FIVE

Formula II Cars, 1948-53

VERY often in the history of automobile racing there have been two concerns whose Grand Prix cars have had a considerable degree of superiority over their rivals. In the earliest days Mors challenged Panhard ; in 1907-8 came the battle of Mercedes versus Fiat, followed in 1912-3 by Peugeot versus Delage and in 1914 Mercedes against Peugeot. When Grand Prix racing restarted in 1921 a two-year lead by Fiat gave way to battle between Delage and Alfa Romeo, followed from 1925-31 by Alfa Romeo versus Bugatti, and then between 1934 the great struggle between the two German concerns, Auto Union and Mercedes-Benz. As has been shown in earlier chapters of this volume, post-war Formula I racing was notable for the dominance of the pre-war-designed Type 158 Alfa Romeo, but this model was eventually challenged with success by Ferrari.

In Formula II the story has been somewhat different. From 1948 up to the end of 1953 the mere presence of a Ferrari has set odds of 9 : 1 against a win by any other make, and one can cite but two instances when a team of three works-entered Ferraris has not provided a winning car. From one point of view, therefore, a full description of the 2-litre Ferraris, fitted first with a twelve- and then with the four-cylinder engine, would suffice as a complete technical record of the period. But many other makes have been only a little inferior in speed and a number of the designs have embodied features of considerable engineering interest. On this account, this chapter will give a brief survey of all the principal cars which have competed in Formula II. A further reason for so doing is that it is as yet too early to determine the relative significance of some of the details of design and it will serve the cause of progress best to make brief references to them all.

CONNAUGHT

INTRODUCTION

The four-cylinder Connaught was first put on the track in 1950, but was seriously damaged when being tested during August, and appeared only once at a minor meeting at the end of the year. It reappeared for the season of 1951 with the original, wishbone-type, independent rear suspension replaced by a de Dion rear end.

Six cars were constructed during 1951 and a further four between 1952 and 1953. As might be expected, a number of changes were made in detail design during the three seasons of operation and these are referred to in the notes below on the construction of the car. The Connaught can be shown to be substantially the fastest British Formula II car and it has in all had a record of 20 wins, 23 seconds, and 13 third places.

CONSTRUCTION

Engine

The Connaught engine derived from initial use of a 1½-litre Lea-Francis power unit designed by Mr. Hugh Rose, who was also responsible for the successful 1912

Coupe de l'Auto Sunbeam cars. The original design had a bore and stroke of 69 and 100 mm. and gave 50 b.h.p. at 4,700 r.p.m., and a later development of 1,750 c.c. (75 x 100 mm.) gave 85 b.h.p. at 5,500 r.p.m. Modifications to valve lift, compression ratio and inlet systems produced 135 b.h.p. at 6,000 r.p.m.

After this an aluminium cylinder casting was used, giving 79 x 100 mm. with inserted wet liners, and with the original timing chains replaced by a train of gears and the installation of newly designed connecting rods, crankshafts, valves, sump and flywheel the engine in final form bore only an external, and dimensional, similarity to the original.

The four-throw crankshaft is supported in three main bearings, and conventional connecting rods are used in conjunction with steeply domed, light-alloy pistons giving a compression ratio of 10 : 1. The sump is a small-capacity, light-alloy casting attached to a flange well below the centre line of the crank, a scavenge pump feeding oil back to a separate tank. The cylinder head is unusual in being made of cast-iron, for this material, despite its disadvantages in weight and heat transfer, has the merit of stiffness and stability, and also makes it possible to use large valves seating direct in the head. Valves are set at 90 degrees with a central sparking plug, and operated through rockers and push-rods from two camshafts mounted as high up as possible in the main casting. The shafts are driven by a train of five gears at the front end of the engine.

Considerable attention was given to the use of resonant effects to obtain ram in the inlet system and four motor-cycle-type Amal carburetters drew air from a " box " formed in the side of the bonnet, the purpose of this device being to ensure stable conditions around the air entry and not to offer pressure rise derived from the forward motion of the car. The exhaust system was closely matched against the inlet manifolding and the engine in this form gave 155 h.p. at 5,500 r.p.m., which is equal to 5.7 h.p./sq. in. of piston area and 210 lb./sq. in. b.m.e.p. The maximum b.m.e.p. was achieved at 4,000 r.p.m. at 195 lb./sq. in., and 180 lb., or better, were held over the remarkably wide range of 3,100 to 5,500 r.p.m.

During 1953 one car was experimentally fitted with the American Hilborn fuel-injection system. In this arrangement there are four long air-intake pipes with a conventional butterfly throttle mounted in each close to the cylinder head. Upstream from the throttles are four nozzles receiving fuel from a low-pressure pump, the flow being responsive to throttle position, but not to manifold pressure or engine speed. With the wide mixture strength, variations permissible with alcohol fuel and the small amount of part-open throttle conditions obtaining with a racing car of moderate power, this simple, if crude, system has been found to give excellent results. The weight of the Connaught engine with flywheel is 264 lb.

Gearbox and Rear Axle

No clutch is used, power being delivered direct from the crankshaft to a four-speed Wilson-type pre-selector gearbox. A description of this is included in remarks on the Formula I E.R.A. car (q.v.). The propeller shaft is inclined sharply downwards and an extension passes beneath the bevel-box housing to a pair of spur wheels mounted at the back of the car. This enables a quick choice from one of five final axle ratios to be made. A conventional bevel gear and differential are mounted in the bevel box and drive to the rear wheels is through two open halfshafts each with two universal joints.

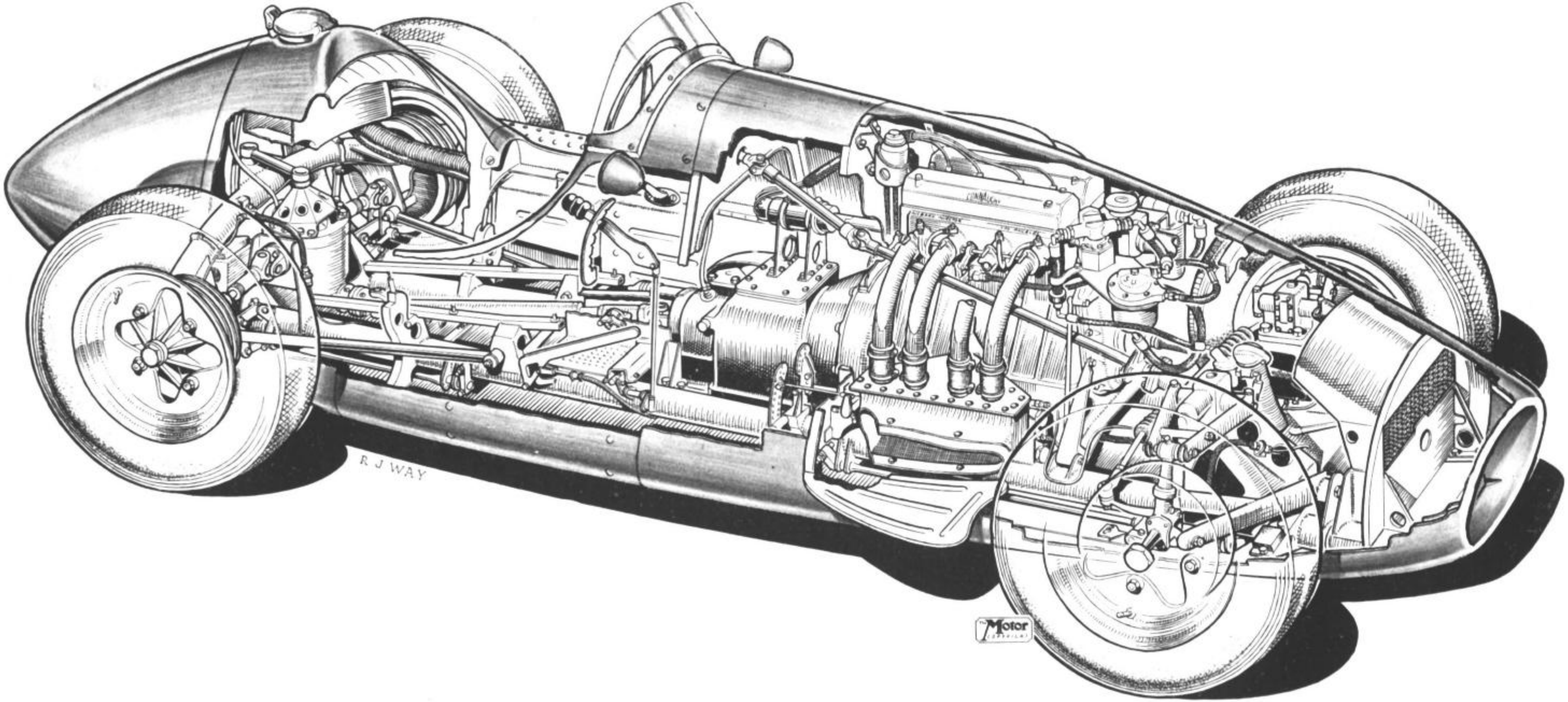

PLATE III

FASTEST FROM ENGLAND – Although designed in the first place to make use of proprietary components, the Formula II Connaught is developed to a point where it became the fastest English car in this class. As can be seen here, a tubular frame supports a de Dion rear axle.system and unequal-length front wishbones, and the four-cylinder engine transmits power to a four-speed pre-selector epicyclic gearbox in which the first gear band is used as a clutch when starting the car from rest.

Rear Suspension

The original design of de Dion layout used an unsplit dead rear axle tube to connect the rear hubs. This was located longitudinally by two parallel radius arms connected both to the frame and to the hubs through rubber bushes. It was inclined inwards in plan view. This arrangement put considerable compression and tension stresses into the radius arms (and hence into the bearings) and was subsequently replaced by longer, single-acting arms attached to the frame with a single torque arm running from a bracket at the mid-point of the de Dion tube to the top of the bevel box, spherical joints being provided at both ends. Simultaneously, the conventional sideways location of the de Dion tube, i.e. with a sliding member in a slot attached to the frame, was changed to transverse-mounted radius arms. Further transverse arms make connection with longitudinally mounted torsion bars in such a manner that there is a rise in rate of 30 per cent at full bump, the roll centre of the rear axle assembly being 5 in. above the ground.

Front Suspension

This is of the double-wishbone type, the lower arms being connected with longitudinally positioned torsion bars. The upper wishbones embrace piston-type dampers and a full-length king-pin is used between the upper and lower links. The wishbones themselves are fabricated from 14-gauge steel and, as originally designed, pave a roll centre 0.4 in. above ground level. Despite the use of a powerful anti-roll bar, the car in this condition tended to over-steer and the elements were subsequently rearranged to bring the roll centre 7 in. above the ground.

Steering Gear

The rack and pinion gear is contained in a light-alloy casting giving two turns from lock to lock with a movement of 25 degrees on the road wheels.

Frame

The frame is based upon two 3¾ in. diameter steel tubes with a wall thickness of 1.6 mm. which converge from front to back-an arrangement originally dictated by the wishbone-type rear suspension used on the prototype. The frame weighs only 90 lb. and is stiffened at the back end by the magnesium casting used for the bevel box and at the front end by a box-section cradle which provides a three-gallon reservoir for the engine oil.

Brakes

Lockheed two leading-shoe brakes are used with a diameter of 12 in. and friction lining area of 181 sq. in. The brakes for front and rear pairs of wheels have independent operating systems connected to the pedal through a whiffle tree which permits any required variation in braking effort between the front and rear wheels. Light-alloy drums with Al-fin liners are used and these also support the unconventional bolt-on disc wheels which are cast in magnesium-zirconium. As originally designed, this arrangement gave an unsprung weight of 62 lb. for each side at the front, and 70 lb. for each side at the back, but on the latest cars the rear brake drum was reduced in size (to 9 in. diameter and 1¾ in. wide) and this, together with light-alloy wheel cylinders, gave a weight saving of a little over 12 lb. per wheel.

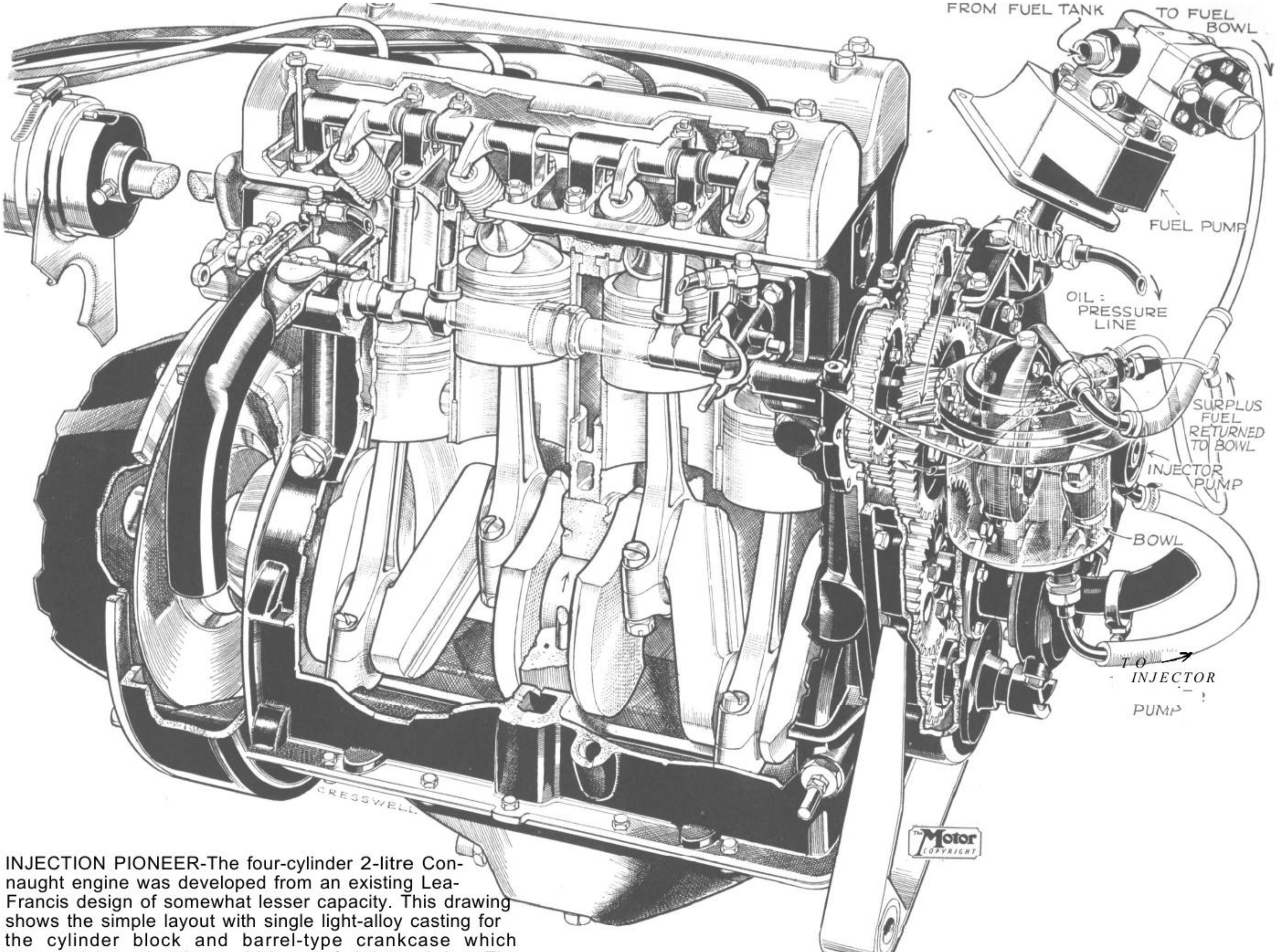

INJECTION PIONEER-The four-cylinder 2-litre Connaught engine was developed from an existing Lea-Francis design of somewhat lesser capacity. This drawing shows the simple layout with single light-alloy casting for the cylinder block and barrel-type crankcase which supports three bearings which are fed in endwise. The cylinder bores are detachable sleeves and there are two highly-placed camshafts opening the valves through push-rods and rockers. The engine as shown was fitted during 1953 with the American Hilborn-Travers fuel injection system in which mixture is supplied to jets placed upstream of the throttles, flow being varied in accordance with throttle position, but not in relation to engine speed. A fuel bowl guards against aeration, and supplies the pump under constant head.

Body and General Features

From the beginning Connaught pioneered side tanks, one being placed on each side of the car with separate filling systems. The total capacity was 19½ gallons and adequate for non-stop runs in Formula II races originally envisaged as being about 200 miles in length. With greater power, and longer races, it became necessary to enlarge the tanks to ensure a non-stop run and they were at this time made of steel in place of light alloy. On the latest cars the wheelbase was also lengthened to 7 ft. 6 in. (from 7 ft. 1 in.), and the greater weight following from these changes was offset by the use of light-alloy combined radiator and oil cooler weighing only 12 lb. in place of the 42 lb. of the original components.

Although no effort has been made to provide a really aerodynamic shell, the air is ducted carefully through the radiator core and the shape has been made as smooth as possible, even when this has involved slightly increasing the frontal area. The weight of the car in final form was 1,220 lb.

Dimensions qf Connaught

Wheelbase : 7 ft. 6 in. ; Front Track : 3 ft. 10½ in. ; Rear Track : 4 ft. 0½ in.

COOPER

INTRODUCTION

In 1949 the Cooper Co. installed some vee-twin 1,000 cc. J.A.P. engines in a long-wheelbase version of their 500 c.c. Formula III rear-engined chassis. Although possessed of high acceleration, these cars had neither the speed nor the stamina required seriously to compete in Formula II events.

During the winter of 1951-2 it became known that the Bristol Aeroplane Co. were prepared to sell developed versions of the six-cylinder 2-litre engine which had been derived from the Type 328 B.M.W. of 1939 for use in the Bristol saloon car. The Cooper Co. thereupon decided to build a batch of cars using this power unit and to offer them to private owners for the 1952 racing season. At the end of the year the lessons learnt were embodied in a Series II car with greater braking area, a stiffer frame and somewhat lower weight. The Bristol engine used in 1953 developed approximately 150 h.p. compared with about 135 h.p. available during 1952.

CONSTRUCTION

Engine

The six-cylinder engine has a bore and stroke of 66 x 96 mm. and thus betrays the years of its origin by a stroke : bore ratio of 1.45 : 1. The main block is an iron casting in which the six-throw shaft runs in four Vandervell thin-wall bearings, the shaft being heavily counter-balanced. A wet sump is attached to the base of the crankcase and the cylinder head is in light alloy and embodies a number of unusual features.

The 90-degree inclined valves are operated from a single, crankcase-mounted, chain-driven, camshaft, the inlet valves having conventional rockers and the exhaust valves opened through a system of double rockers with short push-rods running in tubes transversely across the head. The high inertia forces inevitable with such an arrangement, and the long stroke of the engine, put a limit on crankshaft speed of below 6,000 r.p.m., but a relatively high power output is obtained through unusually good breathing derived from a unique port layout. Three down-draught Solex carburetters feed mixture into three vertical inlet passages cored into the head, these diverging so that each feeds two inlet valves. There is thus a direct down-flow from the jet to the cylinders, giving exceptional fuelling as indicated by a b.m.e.p. figure of 170 lb./sq. in. on a 10 : 1 compression ratio at 3,620 ft./min. piston speed.

In 1951 the engine was of basically the same design, but with an 8.5 : 1 compression ratio ; the output as originally raised was 120 b.h.p. or 152 Ib./sq. in. b.m.e.p. at 3,460 ft./min. The engine weighs approximately 340 lb.

Gearbox and Rear Axle

A single dry-plate clutch transmits the drive to a four-speed gear train housed in a vertically divided, light-alloy gearbox. From this an open propeller shaft makes a connection with a hypoid rear axle gear mounted in a magnesium alloy casing. On the 1952 models this was bolted between two side plates and had a secondary function of stiffening the rear end of the frame.

Rear Suspension

A single transverse leaf spring also acts as a top radius arm to support the rear hubs. Bottom wishbones having an effective radius equal to the top spring are also used with direct-acting dampers.

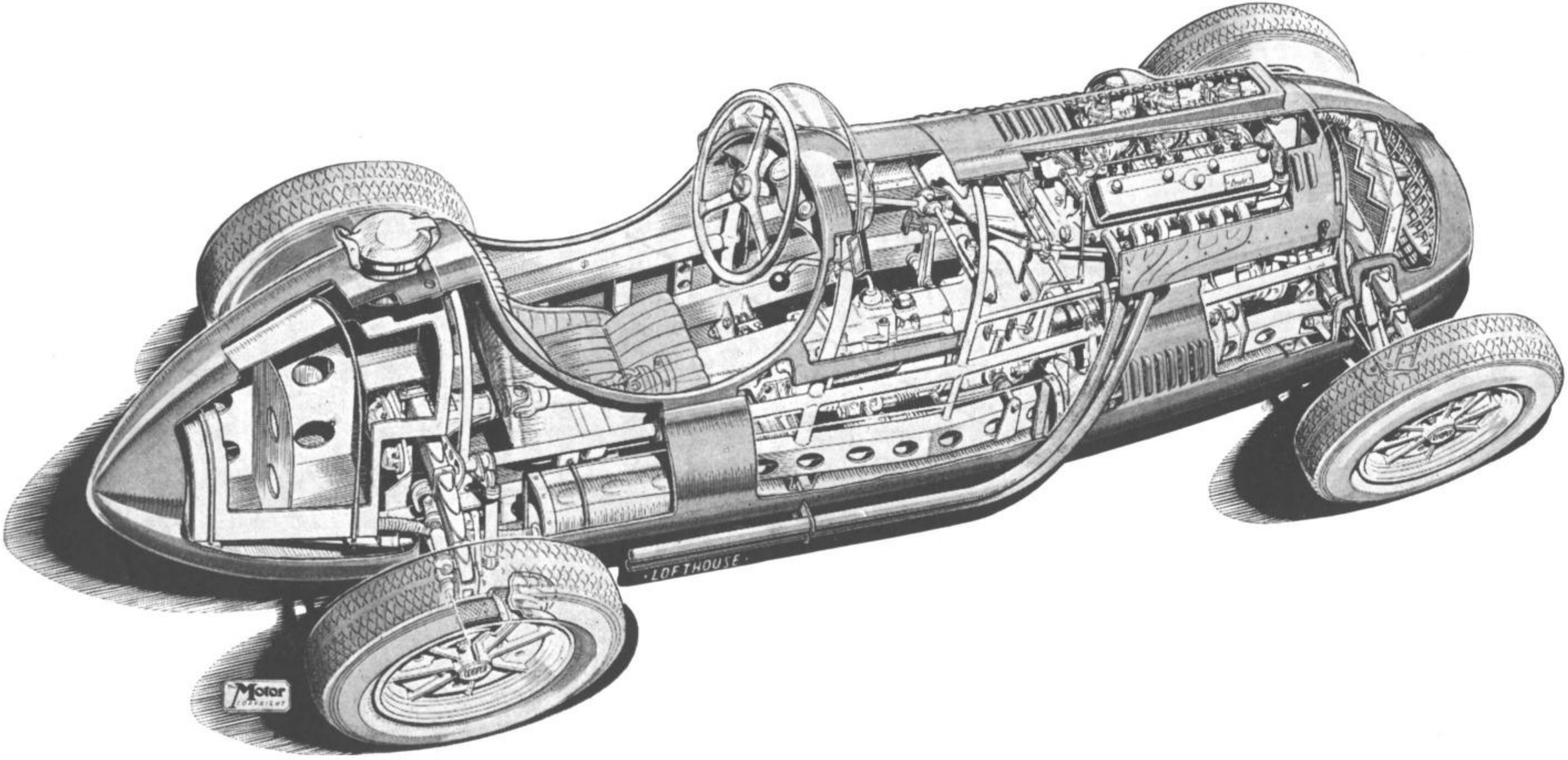

EFFECTIVE SIMPLICITY-A batch of Bristol-engined Formula II racing cars built by the Cooper Co. had a good record in 1952, their light weight and reliability compensating for moderate engine power and a simple chassis layout.

The Bristol engines were modified production models giving between 130 and 140 b.h.p. and, as shown here, the chassis was formed from two box-section frame members supporting transverse leaf and wishbone independent suspension fore and aft. The brake drums were cast integrally with the light-alloy front wheels. The 1953 version of this car embodied various modifications, including a space-type frame, separate brake drums and an engine giving 140/150 b.h.p.

Front Suspension

This is, in effect, a replica of the rear suspension and at both front and rear, therefore, the effective roll centre is vertical on ground level, and when cornering both front and rear wheels roll with the car.

Frame

The 1952 cars had box-section frames which were somewhat inswept behind the scuttle. These weighed 150 lb. and, although reinforced by a tubular scuttle and body-mounting structure, were somewhat lacking in torsional rigidity. In 1953 a second batch of cars was made using a space-type frame constructed from 16-gauge steel tubes of 1½ in. diameter. As can be seen from a drawing, these had their maximum depth at the scuttle with two diamond sections running fore and aft.

Steering Gear

A rack and pinion gear is used, the pinion being on the offside of the car, connected to the steering wheel through a double universal jointed open shaft.

Brakes

On the 1952 cars 10 in. diameter Lockheed two leading-shoe brakes with a lining area of 134 sq. in. were cast integrally with the bolt-on light-alloy wheels which have been a characteristic of all Cooper racing cars. On the 1953 models the same type of wheel is used, but with separate Al-fin light-alloy drums. These are 11 in. in diameter, 2¼ in. wide at the front and 1¾ in. wide at the back. Large forward-facing air scoops are provided on the cast magnesium back plates.

General Features

The bodywork on the Cooper has been designed to give the minimum possible frontal area, but on the 1952 cars the high seating position put the driver very high out of the car and thus increased somewhat the drag. On the 1953 models the seat was lowered, and further attention to drag is shown by the split radiator cores. These were joined to a common header tank, but inclined outwards towards their base and air passing through each section did not enter the engine compartment, but was deflected through gills at the outside of the car. A large air scoop was developed on most cars along the top of the bonnet, and some degree of pressurisation in the engine compartment may have been attained.

Dimensions of Cooper

Wheelbase : 7 ft. 6 in. ; Front Track : 3 ft. 10 in. ; Rear Track : 3 ft. 10½ in.

E.R.A. G TYPE

INTRODUCTION

Shortly after the war, financial control of English Racing Automobiles, Ltd., was taken over from Mr. Humphrey Cook by Mr. Leslie Johnson, who was at that time a private owner of one of the E-type E.R.A.s, the parts for which had been constructed in 1939 and assembled immediately following the war.

Despite some theoretical promise, this car could not be developed in time seriously to compete in Formula I racing, and in 1951 it was resolved to make an entirely new start with a Formula II car designed by Mr. David Hodkin, who had been appointed Chief Engineer to the company. A series of unexpected engine difficulties prevented the one car made from figuring prominently in the events of 1952, and at the end of this year the car, and the drawings thereof, was bought by the Bristol Aeroplane Co., Ltd., to further a programme of research upon which they were embarking. Despite the fact that it did not feature in major racing results, the car embodies many features of technical interest which are summarised below.

Construction

The primary design requirement for the G type was to obtain low weight with a high degree of stiffness. The car was also designed as a possible two-seater, so that it could be developed from a racing into a sports-car without major change in layout.

Engine

A Bristol 2-litre engine was chosen, and, with one exception, this was virtually identical with the power units used by Cooper which have been described already.

In order to lower the bonnet line of the E.R.A. as far as possible, a shallow, dry sump was used with a separate scavenge pump. Modifications were also made to the water pump and the 10 mm. sparking plug bosses were modified to permit the use of 14 mm. plugs, the masking normally used being eliminated at the same time.

Considerable efforts were made also to match the flow characteristics of the short down-draught inlet passages with the exhaust system. As can be seen from an illustration of the car, each exhaust port is provided with a separate short pipe, these being gathered together and discharging through a venturi into a single tail pipe. The air intakes to the carburetter were also pressurised by a tightly fitting air box fed by a duct of increasing cross-sectional area, the entry to which was placed at the extreme nose of the car. This gave the equivalent of 0.3 lb. " boost " at a forward speed of 120 m.p.h., and the float chambers were, of course, balanced against this pressure.

As installed, the engine gave approximately 150 b.h.p. at 5,500 r.p.m. for a weight of 286 lb.

Gearbox

The flywheel of the engine was bolted direct to a propeller shaft having two Lay-Rub joints, a three-plate 7¼ in. diameter clutch being mounted at the far end of the shaft. Following the clutch was a train of gears giving four speeds, these parts being standard Bristol components giving ratios of 1 : 1.292, 1.824 and 3.611 : 1 respectively. The bevel box was built up with the gearbox with a normal differential, the final axle ratio of 3.54 : 1 being employed for most races.

The transmission aggregate was housed in a casting of magnesium-zirconium alloy, a material widely used throughout the car, as will be described later.

Rear Axle

A de Dion type rear axle is employed, the cross-tube being fabricated from mild steel. In order to ensure a low roll centre at the back of the car, this tube was located by an A-bracket placed below the tube and attached to the base of the bevel box, the outer ends of the tube being located additionally by single trailing arms. As inboard brakes were fitted, the de Dion tube was not subject to torque reactions.

Rear Suspension

Variable-rate coil springs were used at the back with direct-acting dampers, both of these components being mounted at the extreme tail of the frame.

Front Suspension

Fabricated steel wishbones were used at the front end of the car in conjunction with variable rate coil springs which embraced direct-acting dampers. Owing to the use of a frame which was oval in section and formed from a material of low density susceptible to high stress concentrations, considerable thought was given to the distribution of the suspension loads and their transmission into the main structure. As finally used, the near and offside suspension units were combined into a steel assembly which fed only resultant loads into the frame at eight separate points and through specially designed nylon bushes. A similar technique was used where all the other main units were attached to the frame.

Steering Gear

A proprietary rack and pinion steering was used giving 1¾ turns from lock to lock.

Frame

This was one of the most novel features of the G-type E.R.A., which is one of the few cars to have been raced with a non-ferrous frame. Large-diameter magnesium-zirconium tubes were rolled into an oval section, these side-members being reinforced by cross-members placed ahead of the engine, behind the engine, and ahead of the gearbox.

The frame was sharply upswept at the back, this section being provided with a tubular bracing. The fireproof bulkheads, body attachments and so on were mounted on the frame in such a manner that they made no noticeable addition to the stiffness thereof, it thus being possible to use any body shape or type without affecting the basic handling qualities of the car, apart from aerodynamic influence. Although weighing less than 100 lb., this frame gave a stiffness factor of 3,300 lb. ft. degree.

Brakes

Inboard brakes were used at the back end of the car, having a diameter of 12 in. and a shoe width of 2¼ in. At the front end, the deeply finned brake drums were 12 in. diameter with a shoe width of 2¼ in. with two leading shoes.

Wheels

Light-alloy castings were used for the wheels, with detachable light-alloy rims. The spokes of the wheels were arranged to centrifuge air over the face of the brake drum, and the system was virtually immune to fade.

Body and General Features

The fuel was mounted as nearly as possible centrally on the car, the driver being offset to the right-hand side. The low-mounted, light-alloy radiator had a separate header tank and an oil cooler beneath it. The long steering column passing down the right-hand side of the car was of large diameter and made from light alloy.

Somewhat squat and angular in appearance, the G-type E.R.A. was not an attractive car. General layout and special features of the design gave it exceptional road-holding qualities despite an unladen weight of only 10 cwt.

Dimensions

Wheelbase: 8ft.0in.; FrontTrack: 4ft.3in.; RearTrack: 4ft.3in.

THE FOUR-CYLINDER FERRARI

INTRODUCTION

Preceding chapters have demonstrated the dominant position achieved by the Colombo-designed twelve-cylinder Ferraris in Formula II events. In 1951, when it was already apparent that Formula II was likely to be adopted for the Grandes Epreuves of 1952 and 1953, Enzo Ferrari authorised his new chief engineer, Aurelio Lampredi, to develop two new engines. The first of these was a double overhead camshaft twelve-cylinder with a bore and stroke of 62.5 x 52 mm. ; the other an apparent regression in the shape of a four-cylinder with a bore and stroke of 90 x 78 mm. Both of these engines could be fitted into Lampredi's de Dion axle chassis, which became also the basis for the 4½-litre Formula I cars which are described in detail elsewhere.

The Lampredi twelve-cylinder engine was set aside early in 1951 and the four-cylinder type, which was designed and built within three months, dominated the racing of 1952 and 1953.

CONSTRUCTION

Full details of the four-cylinder Ferrari engine are not obtainable, for as the current racing type is similar in many respects to the Formula II model, the manufacturers are naturally reluctant to disclose details which might be of use to possible racing rivals. It is, therefore, necessary to limit this description to the broad features of the power unit and vehicle.

Engine

The basis of the engine is a very deep light-alloy crankcase which provides four mounting points in the frame and also housings for the five Vandervell thin-wall bearings which support the four-throw crankshaft. At the front end of this shaft a train of gears runs upwards to the two overhead camshafts and downwards to the oil and water pumps, and also provides a drive for two magnetos.

The cylinder head is cast integrally with the water jackets but it is open at the base of the hemisphere, for the cylinder bores conventional with this arrangement are made from separate pieces. Four steel liners are provided with a reduced diameter at their upper end and are screwed into a corresponding recess in the combustion chamber. This makes an effective gas and water seal without the use of a gasket, each liner having a flange at the base which traps two rubber rings so as to provide an oil and water joint at the base of the assembly. Although similar in principle to the arrangement used on earlier twelve-cylinder engines, and having in common therewith the advantage that all water passages (including those around the exhaust ports and sparking plug bosses) can be inspected before assembly, this arrangement gives a more reliable joint than the bolted-up construction used on the earlier types, and also enables the cylinder centres to be set more closely together.

Each combustion chamber carries two valves closed by two hairpin springs, the included valve angle being 58 degrees-a figure which is considered to give the best compromise between valve area and shape of combustion chamber with a compression ratio of 12 : 1. Light-alloy inverted tappets are interposed between the camshafts and the valves and they are controlled by double coil springs. Although higher engine speeds can be used, the peak of the engine performance is reached at between 7,000 and 7,200 r.p.m., at which speed the output is approximately 180 b.h.p. This is the

PLATE VI

THE 1953 FERRARI Formula II CAR

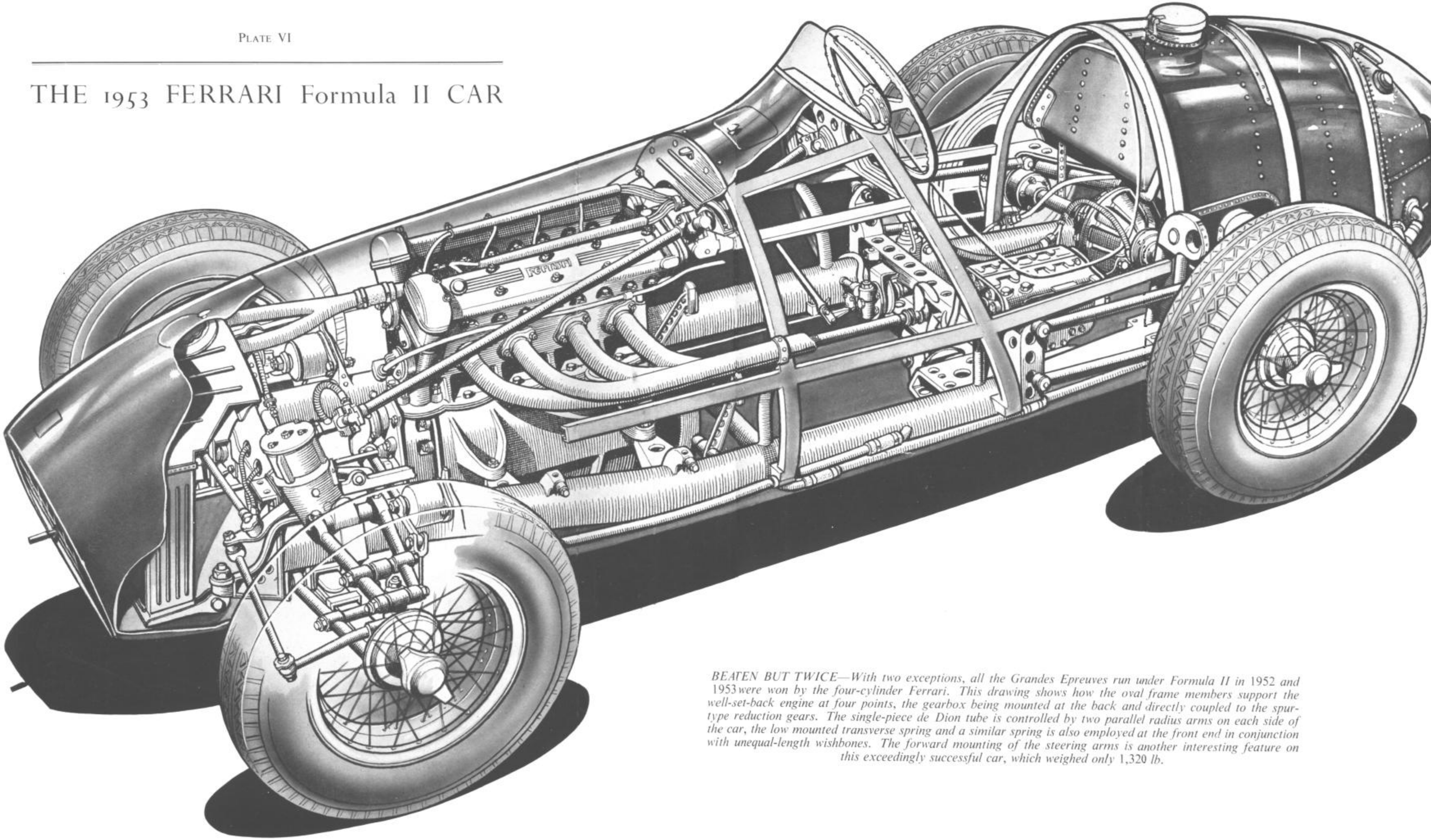

BEATEN BUT TWICE—With two exceptions, all the Grandes Epreuves run under Formula II in 1952 *and* 1953 *were won by the four-cylinder Ferrari. This drawing shows how the oval frame members support the well-set-back engine at four points, the gearbox being mounted at the back and directly coupled to the spur-type reduction gears. The single-piece de Dion tube is controlled by two parallel radius arms on each side of the car, the low mounted transverse spring and a similar spring is also employed at the front end in conjunction with unequal-length wishbones. The forward mounting of the steering arms is another interesting feature on this exceedingly successful car, which weighed only* 1,320 *lb.*

equivalent of 165 b.m.e.p. at a piston speed of approximately 3,600 ft./min. This excellent figure is the more remarkable in that the engines are run on an 80 : 20 petrol-alcohol mixture which makes possible the fuel consumption of 12 m.p.g. on normal racing circuits.

Considerable gains in combustion efficiency were attained by the use of two sparking plugs per cylinder, these being displaced 10 mm. from the central axis of the head towards the exhaust side, the plugs being screwed in at a slight angle on each side of the bridge between the inlet and exhaust ports.

A number of varying exhaust systems have been tried during the course of two years' racing, that most commonly used having separate pipes from cylinders 1 and 4 and 2 and 3 joined in pairs and then discharging into a common tail pipe.

As on all high-output, unsupercharged engines, much thought has been given to ram effects on the inlet side of the head, and air enters the four choke tubes of the horizontal Weber carburetter through bell-mouthed extension pipes of carefully determined length. Owing to the large size of the combustion sphere and the small alcohol content of the fuel, careful consideration had to be given to internal cooling, and the water pump discharges directly into a passage cored from the centre main bearing, coolant being distributed upwards therefrom to the cylinder head. Water is evacuated from the head by four riser pipes bolted down to passages cored between the dual sparking plug bosses and offset to the inlet side of the head. It is evident that in this system due attention has been paid to the desirability of cooling the centre bearing of a four-cylinder engine with substantial reciprocating masses.

Creditable as is the maximum output of the engine, a feature that has aided greatly on racing circuits has been the very high standard of reliability reached and the fact that the peak of the torque curve was reached at a little under 5,000 r.p.m. This gives the driver a range of about 0.7 : 1 in road speed on any given gear ratio and makes possible a saving in weight and driving effort by the use of a four-speed gearbox in place of the five-speed boxes used on the twelve-cylinder engines.

Gearbox

A multi-plate clutch (friction linings alternating with light-alloy discs) transmits power to the four speeds of the box, which are carried in a vertically split light-alloy housing, the main and lay shafts laying side by side and driving a crown wheel and pinion. The vertically split main-drive housing contains two spur wheels which embrace a Z-F limited-slip differential.

Rear Axle

A de Dion type rear axle is used, the tube passing behind the main-drive casting which embodies a groove which provides sideways location for the axle and wheel hubs. As a consequence of using two parallel radius arms on each side of the car, it is not necessary to articulate the de Dion tube, which is a simple steel fabrication.

The Mercedes-Benz 1937 version of the de Dion rear axle, as shown in the illustration overleaf, was widely copied in subsequent years. In this arrangement a cross-tube was given fore and aft location by a single triangulated arm, and, as shown in the two top drawings, if one rear wheel rose there was an angular movement at the end of the axle tube which had, therefore, to be split so as to allow for partial rotation. In 1951 Lampredi introduced an alternative for the Ferrari cars using two parallel links giving slight variations in wheelbase and angular displacement of the axle tube, but avoiding any rotation thereof. The axle tube could, therefore, be made in one piece with the saving of cost and weight.

Rear Suspension

A transverse leaf spring is placed low down at the back of the car and is damped by two vane-type Houdaille shock absorbers.

Front Suspension

A single transverse leaf spring is mounted very low down at the front end of the frame and was originally connected to the upper member of unequal-length wishbones by an articulated rod. Since mid-1952, the spring, which is provided with two master leaves, has been connected directly to the lower wishbone. A full-length king-pin is placed between the wishbones and a separate link is used to connect with dampers of similar type to those used at the back of the car.

Both front and rear springs are supported at two points, the front location being designed to ensure understeer.

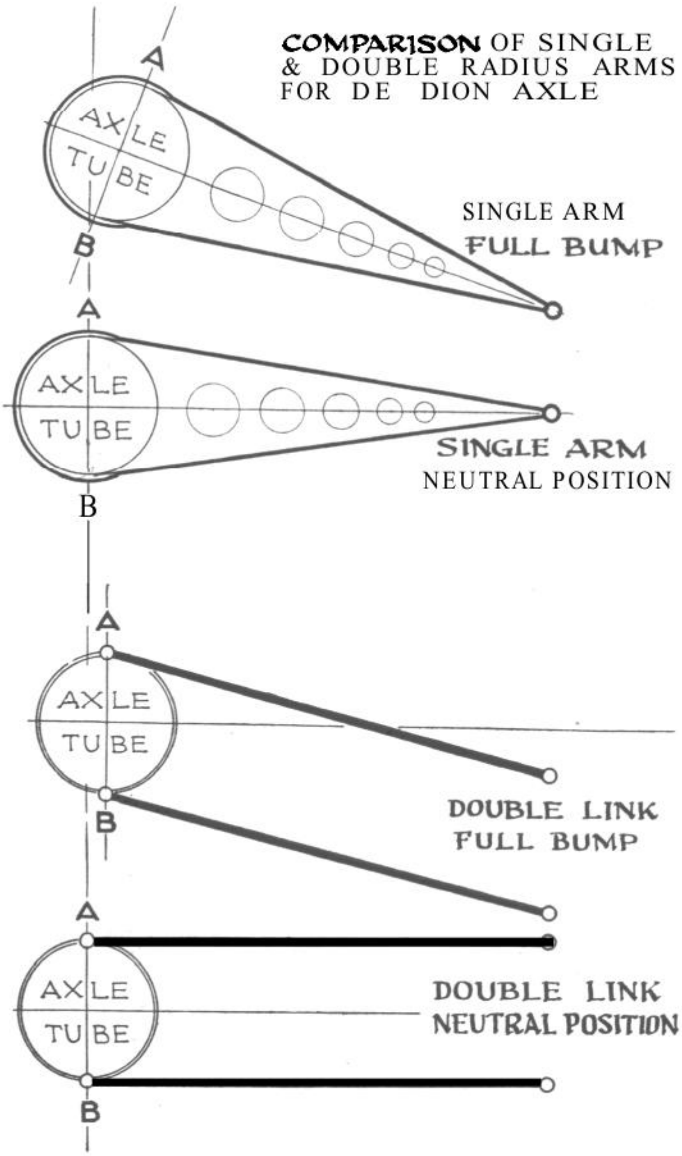
COMPARISON OF SINGLE & DOUBLE RADIUS ARMS FOR DE DION AXLE

Steering Gear

The two-piece steering column passes down the left-hand or exhaust side of the engine and is connected to a worm and wheel steering box through three universal joints. The transverse steering linkage involves a sleeve arm and two short trackrods mounted ahead of the front wheel centres.

Frame

A steel frame is used with oval frame members which are 4.4 in. deep, 2.15 in. wide, and have a wall thickness of only 1.5 mm. This frame is cross-braced by large tubes at the front and back and smaller tubes placed just behind the engine and ahead of the gearbox. A strong arch is also erected around the scuttle and U-section longitudinal tubes are carried fore and aft to give additional stiffness.

Brakes

In order to give the greatest practical diameter for the brakes ; to make possible very deep fins to provide adequate drum stiffness, and to expose the fins to maximum

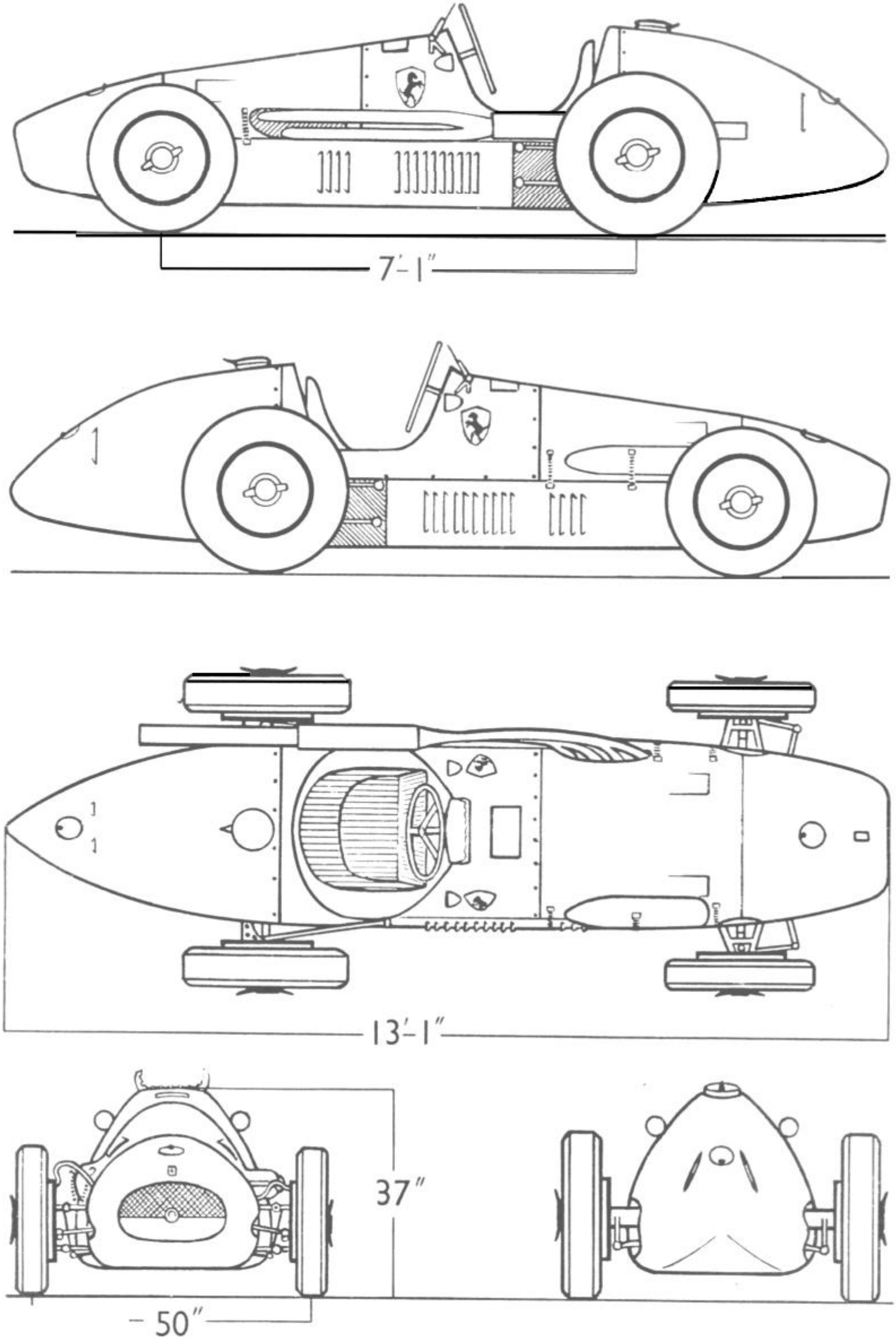

The 1953 Formula II four-cylinder Ferrari to scale of I : 30.

air flow there is a very marked offset between the wheel centre and the projection of the king-pin. In this respect the car resembles the 4½-litre model, details of which are shown in one of the plates. The light-alloy drums with bonded lining are of 13.8 in. diameter and give a friction lining area of 245 sq. in. Two leading shoes are employed for both front and rear drums, a light-alloy spider attached to the back plate giving a central guiding point for each of the very stiff, light-alloy shoes. In effect, therefore, the system has exceedingly little self-servo action, the higher pedal pressure required as a consequence being deemed preferable to instability of braking with change of lining temperature.

Body and General Features

The Formula II Ferrari is a car of conventional, but well-balanced appearance, the driver being seated centrally above the fixed propeller shaft and the bonnet line falling away sharply to a cowling which carries the air intake very far forward from the front wheel centres. Although the radiator is also considerably outrigged from the nose of the frame, no great effort has been made to reduce the height of the radiator core, and the header tank remains in the conventional position. The tail of the car embraces a 33-gallon fuel tank which weighs but 11 lb., and the all-up weight of the car in 1953 form was only 12 cwt.

Dimensions

Wheelbase 7 ft. 1 in. ; Front Track : 4 ft. 2 in. ; Rear Track : 4ft. 1 in.

GORDINI

As the Formula II Gordini is a direct derivation from the Formula I cars, which have been described in a previous chapter, it is unnecessary to recapitulate the design features item by item.

The power unit has a bore and stroke of 75 x 75 mm., a 1 : 1 relationship which gives a swept volume within 39 c.c. of the maximum allowable under the formula. As on the four-cylinder 1½-litre models, two camshafts run in parallel with a small offset from the longitudinal axis of the engine, the valves being worked by rockers, an interesting revival of the layout used on the 1914 Grand Prix Vauxhall cars. Three double-choke Weber carburetters are bolted directly against the inlet ports cast in the cylinder head, but although the piston area of this engine equals the highest figure utilised in Formula II racing it is generally reckoned, in the absence of authoritative figures from the makers, that the power output is of the order of 160 b.h.p.

As with the four-cylinder version, so with the six, performance was attained by the installation of the power unit into the smallest and lightest possible car. One of the most interesting features of the constant endeavour to " simplicate and add lightness " is the use of single arms for the location of the front wheels, these being free from any triangulated bracing and relying for resistance to brake torque solely upon the very wide bearings on the frame. Exceedingly powerful brakes were fitted to the Formula II Gordinis, a particularly valuable feature being the deep ribbing around the open mouth of the drum with a view to maintaining concentricity. Single leading shoes were used so as to reduce braking instability due to variations in friction lining coefficient with changes in operating temperature.

Gordini was unique in retaining a conventional live axle, and although this was joined to the frame through a link motion, a rear axle hop was a noticeable feature of the cars, particularly when accelerating out of slow corners.

Dimensions

Wheelbase : 7 ft. 6 in. ; Front Track : 4 ft. 2 in. : Rear Track : 4 ft. 2 in.

H.W.M.

INTRODUCTION

The H.W.M. is an interesting example of a car which attained considerable success in the conditions for which Formula II was originally laid down, and then, owing to lack of financial and physical resources, became less successful when Formula II was adopted for the Grandes Epreuves.

The team of H.W.M. cars which entered Formula II racing in 1950 were basically two-seater models each with a four-cylinder Alta engine mounted in a simple tubular frame using an independent suspension front and back with transverse leaf springs and single wishbones. In 1951 the cars appeared as single-seaters with wishbones and coil-type independent front suspension, making use of standard production units used by Morris Motors, the M.G. Car Co. and Alford & Alder, and at the back a one-piece de Dion tube was supported by quarter-elliptic springs and radius arms, the drive being by a standard Salisbury centre-piece bolted to the frame, with a Wilson pre-selector box directly driven from the engine.

When developing about 130 b.h.p., the engine (which was designed in 1944) proved very reliable, but, following a change to Weber carburetters and increased power output, a good deal of engine trouble was experienced, and the cars were also found to be rather overweight compared with their rapidly developing rivals. For 1952, therefore, considerable changes of design were introduced and the cars about to be described are of the 1952-3 type.

CONSTRUCTION

Although designed specifically for racing purposes, financial considerations made it imperative to use the largest possible number of standard parts in these cars, and this overriding consideration made it imperative to compromise between what was known to be the best theoretical practice and that which was physically possible.

Engine

The basic Alta engine design dates back to the pre-war period, and includes many features of considerable interest. The crankcase walls are extended upwards to form the water jackets and the four bores are formed in one cast-iron block held down on to a retaining wall passing horizontally across the crankcase by through bolts which also pull down the light-alloy cylinder head. The top of the block is flanged and has machined in it a recess into which is fitted four Wills pressure rings which form a most efficient joint between head and block.

Two overhead valves, inclined at an included angle of 68 degrees, are operated from overhead camshafts through the medium of rocking fingers, and in the 1952 models these shafts were driven by a chain placed at the back of the engine so as to reduce stresses induced by torsional resonance to a minimum.

The crankshaft, which runs in three main bearings, was redesigned for 1952 by S.Z. Milledge in conjunction with R. R. Jackson. Other changes were simultaneously made to the power unit. The inlet port shape was revised within the framework of the existing head casting, and the camshaft was modified and the lift of the inlet valves increased. Sand-cast Y-alloy pistons, steeply domed to give a compression ratio of 14 : 1, were used and specially designed connecting rods were employed.

The result of these changes was to increase the power output by rather more than 10 per cent, and, more important, to increase the maximum permissible engine speed from 5,000 to 6,000 r.p.m. and thus to extend the road speed range possible in any given gear ratio.

For 1953 considerably greater power output was sought without changing the bore and stroke of 83.5 x 90 mm. An entirely new cylinder head was designed by Weslake, the overhead camshafts being driven from a train of gears at the front of the engine. In this form the output was 160 b.h.p. at 6,000 r.p.m. using a 12 : 1 compression ratio, this being the equivalent of 173 b.m.e.p. at a piston speed of 3,550 ft./min.

Gearbox

The 1952 cars, in common with their predecessors, used the Wilson pre-selector type gearbox giving indirect ratios of 1.21, 1.5 and 2.0 : 1. The bottom-gear bands were also used to take up the drive when starting from rest. Some difficulties were experienced in maintaining these gearboxes in a reliable state under racing conditions, and in 1953 a conventional clutch was used in conjunction with a Jaguar XK 120C gearbox giving the unfortunately wide ratios of 1.36, 1.99 and 3.46 : 1.

Rear Axle

On the 1952-3 models the chrome-molybdenum de Dion tube was located by a central guide, fore and aft location being provided by two parallel tubes on each side of the car, somewhat sharply inswept to a locating point on the rather narrow tubular frame. With the unsplit de Dion tube originally employed, this layout led to excessive

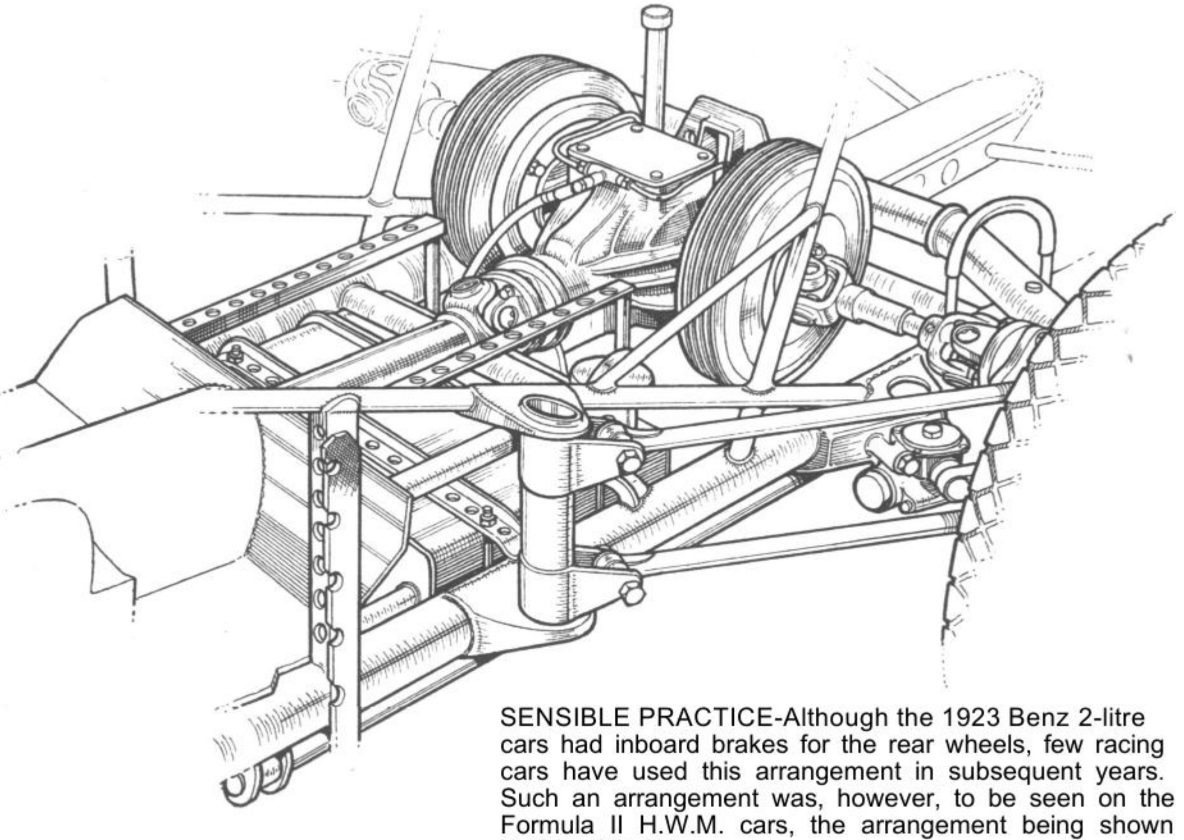

SENSIBLE PRACTICE-Although the 1923 Benz 2-litre cars had inboard brakes for the rear wheels, few racing cars have used this arrangement in subsequent years. Such an arrangement was, however, to be seen on the Formula II H.W.M. cars, the arrangement being shown in this drawing.

roll stiffness at the rear end of the car, and to over-steering. In 1953 the tube was divided with a notable improvement in handling characteristics. The weight of the axle and radius arms was 46 lb. The rear brakes were mounted inboard adjacent to the fixed bevel box and the rear axle was not required to contain braking torque. For 1953 a new design of bevel box was used with quick-change spur gears so that overall axle ratios could readily be modified without changing the whole unit.

Rear Suspension

A link gear connected the de Dion tube to a torsion bar placed beneath the frame.

Front Suspension

This was continued basically unchanged with open-coil front springs and piston-type dampers incorporated in the bearings for the top wishbones. A front anti-roll bar was fitted.

Steering Gear

A proprietary rack and pinion steering gear was employed connected to the steering wheel through a three-piece steering column.

Frame

In 1952 the 2½ in. 16-gauge steel frame was given additional beam and torsional stiffness by a triangulated bracing of much smaller diameter tubes which provided also a convenient support for the body shell. The weight of the total frame structure, including the body supports, was 132 lb.

Brakes

Girling hydraulic brakes were employed, the drum width being 2 in. at the front and 2¼ in. at the back, the diameters being 12 in. and 11 in. respectively, and the drums of the Wellworthy Al-fin type. An interesting detail is the back plate for the drums, which is made in two parts, the dished centre section being a light-alloy casting to which a steel rim is bolted.

Body and General Features

In order to reduce over-steering tendencies to a minimum and to avoid changes in weight distribution during the course of the race, two side tanks were fitted between the fire wall and the rear wheel. These gave a capacity of 11 gallons and were supplementary to a 21½-gallon rear tank giving a total of 32½ gallons for a weight of 38 lb. Unfortunately, the engine characteristics were such that this was not sufficient to provide a non-stop run through the distances used for the Grandes Epreuves.

The relatively long stroke of the engine resulted in a somewhat high bonnet line, and, owing to the height of the radiator core, the front cowling was not swept down so sharply as was the case with the majority of Formula II cars. The centrally positioned driver was also somewhat highly seated, and it is likely that the wind resistance of the cars was slightly above average for these two reasons.

Dimensions

Wheelbase: 7ft.9in. ; FrontTrack: 4ft.1in. ; RearTrack: 4ft.1in,

MASERATI

During the life of Formula I a large number of successes were secured by the four-cylinder Maserati cars, the design of which could be traced back directly to the Type 4CL with four valves per cylinder which entered competition in 1939. In 1948 the interests of the Maserati brothers were bought by the Orsi family and subsequent modifications to their designs were undertaken by the engineers Massimino and Bellentani. Apart from changes to the engine, a tubular chassis was introduced and the original equal-length wishbones connected to torsion bar springs were replaced by unequal-length wishbones supported by small coil springs compressed by a rocker extending from the top wishbone arm.

The characteristic double-drop arm and independent steering to both wheels was also discarded in favour of the more conventional arrangement. With the advent of Formula II a few of these cars were modified to bring the engine capacity up to 2 litres, with the simultaneous removal of superchargers, but these were private ventures and the factory concentrated upon design and construction of a new engine which would fit into a slightly modified chassis. This, the Type A6GCM, is the subject of the present description.

INTRODUCTION

Introduced, and first raced, in 1952, the six-cylinder Maserati benefited in the winter of 1952-3 from the employment of Gioiacchino Colombo, who made extensive revisions to the design of both chassis and engine. The latter raised the output to a point where it can be said with some confidence that the Maserati had the highest maximum speed of all Formula II cars, the performance on a circuit being, however, restricted by continued use of a live rear axle.

Engine

The 1952 engine was based upon an original 1947 Maserati design (the A.6) for a sports-car engine with six cylinders having a bore and stroke of 66 x 72.5 mm. using a single chain-driven camshaft. The detachable cylinder head was completely redesigned for the racing type so as to provide inlet and exhaust valves at an included angle of 90 degrees with overhead camshafts driven from a chain of gears at the front of the engine. Simultaneously, the bore was enlarged and the stroke reduced to give dimensions of 75 x 75 mm. and a piston area of 41.1 sq. in.

The seven-bearing crankshaft runs in a light-alloy crankcase split in the traditional Maserati fashion on the centre line of the crankcase so that the plain bearings are supported by both top and bottom halves. The H-section connecting rods, on the other hand, represent a departure from pre-war Maserati practice, which uniformly favoured tubular rods. A gear-type oil pump at the front end of the engine feeds the main bearings through an external oil pipe mounted on the right-hand side of the crankcase and the dry sump (or, more properly, the lower half of the crankcase) is reinforced by longitudinal cooling ribs.

The light-alloy cylinder head carries the camshafts in seven bearings, the valves being opened through rocking followers hinged upon the inside of each camshaft tunnel. Three double-choke Weber carburetters are fitted to the six inlet ports on the right-hand side of the engine, the exhaust pipes being grouped in pairs of three on the

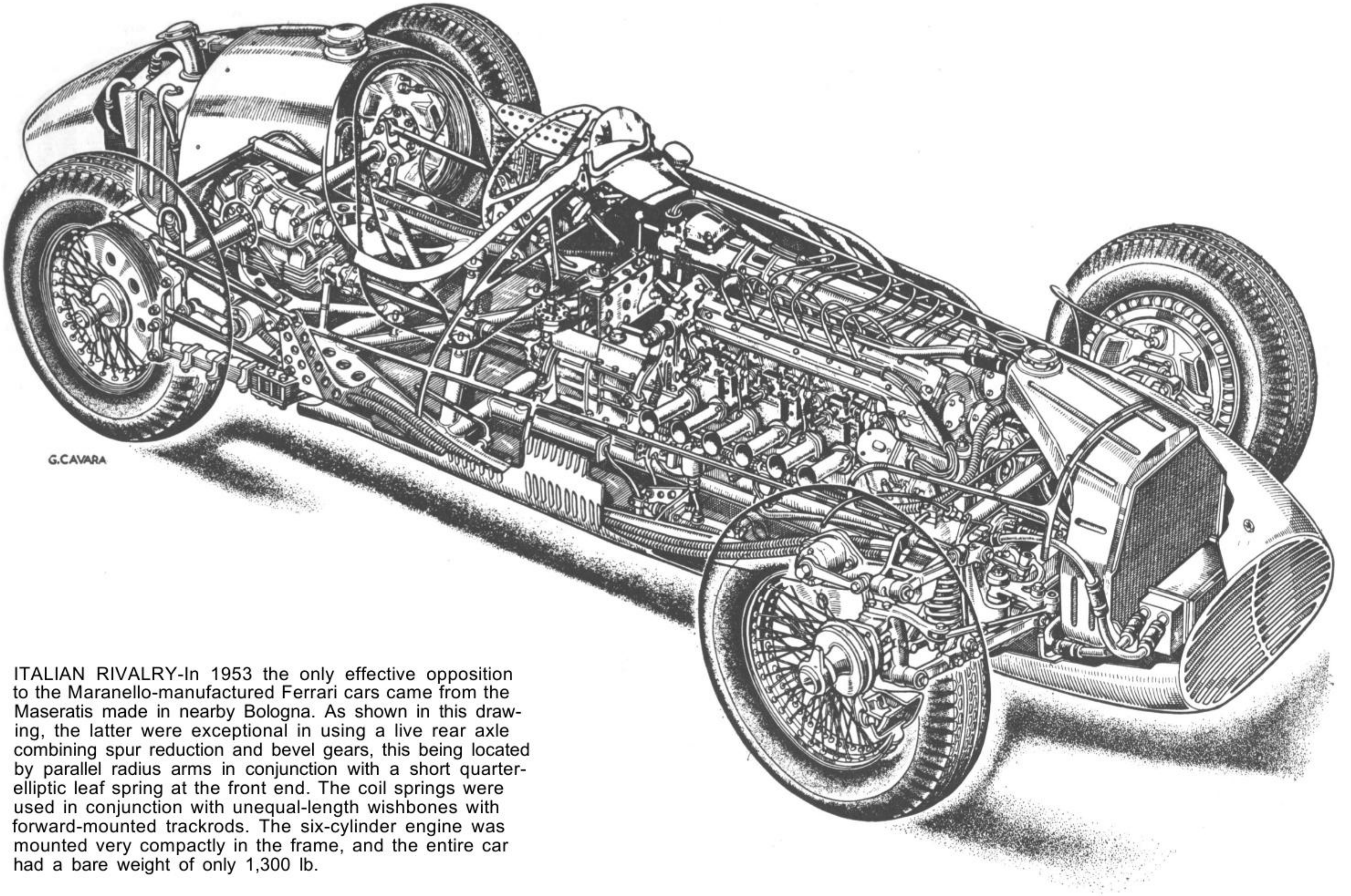

ITALIAN RIVALRY-In 1953 the only effective opposition to the Maranello-manufactured Ferrari cars came from the Maseratis made in nearby Bologna. As shown in this drawing, the latter were exceptional in using a live rear axle combining spur reduction and bevel gears, this being located by parallel radius arms in conjunction with a short quarter-elliptic leaf spring at the front end. The coil springs were used in conjunction with unequal-length wishbones with forward-mounted trackrods. The six-cylinder engine was mounted very compactly in the frame, and the entire car had a bare weight of only 1,300 lb.

left-hand side of the car. In 1952 a single magneto was driven by right-angle gears from the nose of the crankshaft, being canted outwards to the right-hand side of the car so that the contact breaker and distributor were fully accessible. In this form, and with a compression ratio of 8 : 1, the engine gave 165 b.h.p., and during the course of the 1952 season this figure was raised to 177 b.h.p. using a compression ratio of approximately 14 : 1.

Following the arrival of Colombo at the works, and consequent detail changes introduced between September, 1952, and the beginning of the 1953 season, the peak of the power curve was raised to 8,000 and the placard speed to 8,600 r.p.m. At the peak of the curve 190 b.h.p. was realised, the equivalent of 154 p.s.i., as the b.m.e.p. figure at approximately 3,800 ft./min. The most noteworthy change was an increase in the cylinder bore to 76.2 mm. (and a corresponding enlargement of the piston area to 42.4 sq. in.), the stroke being simultaneously reduced to 72 mm. to keep within the 2-litre limit. Compression ratios were varied during the season between 12 and 15 : 1 (13.75 : 1 being normal), the use of very high ratios being facilitated by the unusual shape of the cylinder head. Taking a section along the longitudinal axis, the combustion chamber is shaped like a bowler hat, there being a pair of projecting plateaux in which the sparking plug bosses are formed. This arrangement is a development of a scheme used on the high compression heads of the Indianapolis Offenhauser engines and is particularly appropriate to the use of dual ignition, which was a further Colombo modification. Bench tests show that this feature in itself was worth 11 b.h.p. net, or 5 per cent of the total.

Following upon the use of seven main bearings, the cylinder centres were widely spaced, making it possible not only to provide water passages between each cylinder but also making it possible to insert dry ferrous liners flanged at the top end into the light-alloy cylinder block. The cooling of the cylinder bores was kept entirely separate from the head, and a drawing shows that ample water space was provided both around the valve seats and the sparking plug bosses. This illustration also shows that the camshafts were supported in four bearings with the intermediates placed between cylinders 2 and 3, and 4 and 5, the drive being through a train of five intermediate spur gears to each shaft with the water pump driven by twin belts mounted on the exhaust side of the engine, and the oil pump driven by gears placed directly beneath the nose of the crankshaft.

Being an adaptation, it was found necessary to drive the second magneto from the rear of the exhaust camshaft, but this was recognised as a temporary expedient pending the introduction of a layout which would not be so liable to provide variations in ignition timing as between one magneto and the other.

The peak of the torque curve of this engine was reached at the extremely high figure of 7,000 r.p.m. The greater engine output as compared with the Ferrari was therefore somewhat offset by the lesser range of useful r.p.m. in any given gear.

Gearbox

A double dry-plate clutch takes the drive to a central-positioned four-speed gearbox giving indirect ratios of 1.19, 1.57 and 2.5 : 1. A pump provided pressure lubrication.

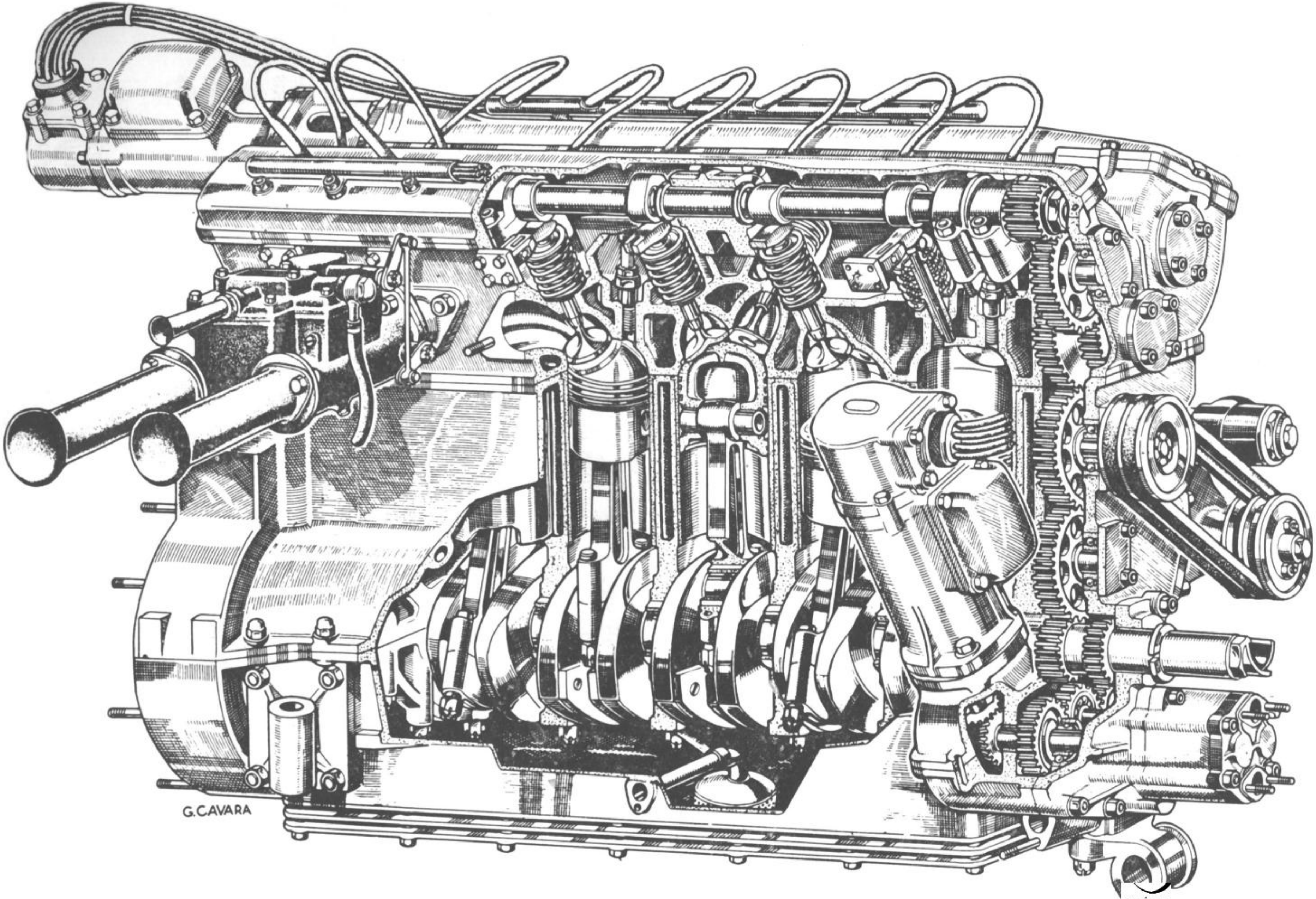

MAXIMUM POWER-The Maserati, with six cylinders (76.2 x 72 mm.), was the most powerful engine built for Formula II racing in 1953. Features shown here are the formation of the bearing housings in the top and bottom halves of the crankcase, the use of dry cylinder liners in the light-alloy casting, and the provision of dual ignition from magnetos placed at opposite ends of the engine. The long extension pipes to the individual Weber choke and jet assemblies are used to give ram effect in the upper part of the speed range. The weight was 330 lb. or I .74 lb./h.p.

Rear Axle

The Maserati shared with Gordini the doubtful distinction of being the only Formula II racing car to continue using a live rear axle. The line of the central open propeller shaft was lowered by spur reduction gears placed on the nose of the bevel housing which was split on the centre line. The axle tubes were bolted to each side of the light-alloy housing, there being little change from long-established Maserati practice in this feature.

Rear Suspension

The rear axle was sprung on quarter-elliptic springs splayed outwards on the early models, but maintained as straight extensions of the tubular frame in the Colombo redesign. The springs were connected to the frame through a massive light-alloy casting which also formed an outrigger for a radius arm mounted above the spring and working on the same effective radius so as to provide a true parallelogram movement. At the end of the season upper and lower radius arms were used and at all times the axle was held laterally by an A bracket mounted on the bevel box.

This was almost identical in layout with the original Maserati design for the 1½-litre A6 model which had open coil springs lying between unequal-length wishbones, the lower of the pair having a radius of 7.4 in. and the upper 4 in. In the 1953 manifestation anti-roll bars were used for front and back suspension, as were Houdaille vane-type dampers.

Steering Gear

A worm and wheel steering box mounted behind the engine is connected to a long push-pull rod running along the right-hand side of the crankcase. This, in turn, is connected to a central-mounted bell crank with two half trackrods running out to the front wheels and placed ahead of the wheel centres.

Frame

This, again, was directly derived from the A6 model and consists of two parallel tubes of chrome-molybdenum steel having a diameter of 3.15 in. and a wall thickness of 1.5 mm. A tubular cross-bracing is also provided, this being in the form of a distorted X with a cross-over point nearer to the back than to the front of the car. Colombo increased the inertia of this frame by adding a triangulated construction above the main tubes with heavily perforated strip stiffening the centre section of the car and forming a support for the body.

Brakes

Two leading shoe brakes were used, the drums being of light alloy with a shrunk-in ferrous liner. The rear brakes had conventional circumferential finning but at the front transverse fins of rather coarse pitch were employed. All four drums had an internal diameter of 13 in. and provided for a shoe width of 2.35 in.

Body and General Features

The Maseratis were characterised by a rather high tail which provided, to some extent, a fairing for the driver's head, the driver in turn being seated lower than on some other Formula II cars. This tail enclosed a fuel tank carrying 28½ gallons, also an oil tank carrying 3.3 gallons, but the high compression ratio used in the engine forced the use of fuel with a high alcohol content and, with a consumption of approximately 8 m.p.g., the rear tank was not sufficient to give a non-stop run ; and when full the weight of fuel (approximately 200 lb.) impaired controllability of the car. In some races an additional tank was provided on the right-hand side of the driver.

Under the Colombo regime the front cowling of the Maserati was extended somewhat and an elliptical air entry was used so that the 1953 cars differed markedly in appearance from the 1952 models.

Dimensions

Wheelbase : 7 ft. 6 in. ; Front Track : 4 ft. 2 in. ; Rear Track : 4 ft. 2 in.

STATISTICS FOR RACING CARS, 1952-3

	1949 *Ferrari*	*1953 Ferrari*	*Connaught*	*H. WM.*	*Maserati*	*Cooper*	*Gordini*
Cylinders	12	4	4	4	6	6	6
Bore M/M	60	90	75	83.5	76.2	66	75
Stroke M/M	58.8	78	100	90	72	96	75
S/B Ratio	0.98	0.87	1.33	1.08	0.95	1.38	1.0
Engine Capacity CM^3	1,992	1,980	1,767	1,960		1,971	1,980
B.H.P.	155	180	155	160	190	150	155
R.P.M.	7,000	7,000	5,500	6,000	8,000	5,750	7,000
B.H.P. per litre	77.5	90	87	70	95	75	77.5
B.M.E.P. lb./sq. in.	145	165	210	173	155	170	149
Piston speed f.p.m.	2,700	3,800	3,600	3,500	3,800	3,620	3,500
Piston area sq. in.	52.5	39.5	27.4	33.9	42.4	31.8	41.1
H.P. per sq. in. piston area	3.24	4.55	5.7	4.25	4.5	4.7	3.78
Piston area sq. in. per litre	26.25	19.75	15.35	17	21.7	16	20.6
Induction system	1 ata.	1 ata.	1 ata.	1 ata.	1 ata.	1 ata.	1 ata.
Weight unladen (cwt.)	12.5	12	11	12	11.5	10	9
Weight with crew and fuel (cwt.)	16	16	15	16	16	14	13
Engine litres per laden ton	2.5	2.5	2.4	2.5	2.5	2.85	3.16
Engine B.H.P. per laden ton	212	225	194	175	235	214	237
Maximum road speed ; m.p.h.	145	148	140	130	150	130	140

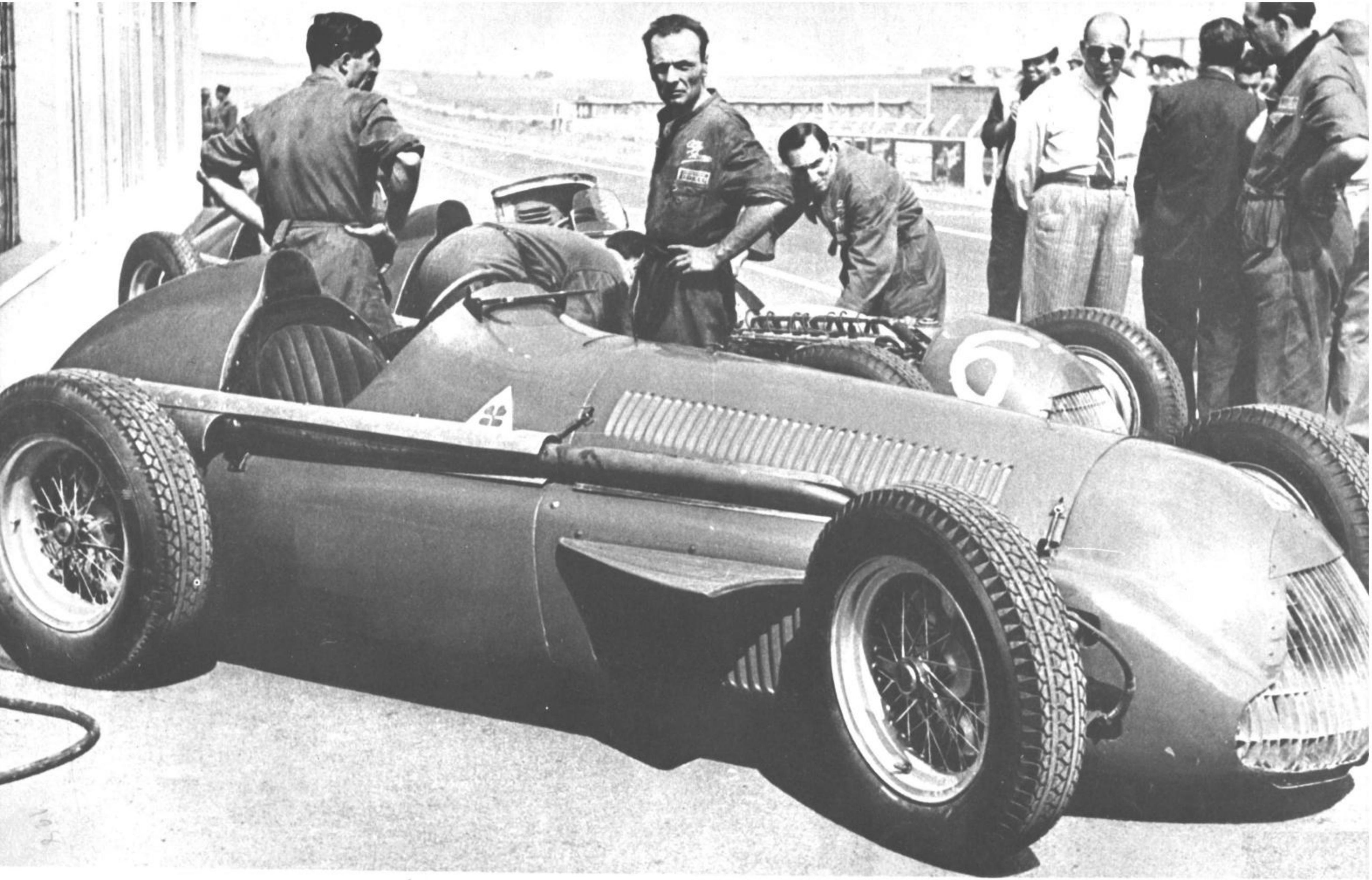

PLATE VII

UNRIVALLED RECORD-The 1½-litre supercharged Alfa Romeo Type 158/9was designed in I937 and raced between I938 and 1940. In the post-war Formula I racing it competed during the seasons of 1947, 1948, 1950 and 1951, and out of a total of ninety-nine cars starting in thirty-five events the racing record of the team showed thirty-one victories, nineteen seconds, fifteen thirds, and twenty-three fastest laps. This represents an achievement unparalleled in motor racing history.

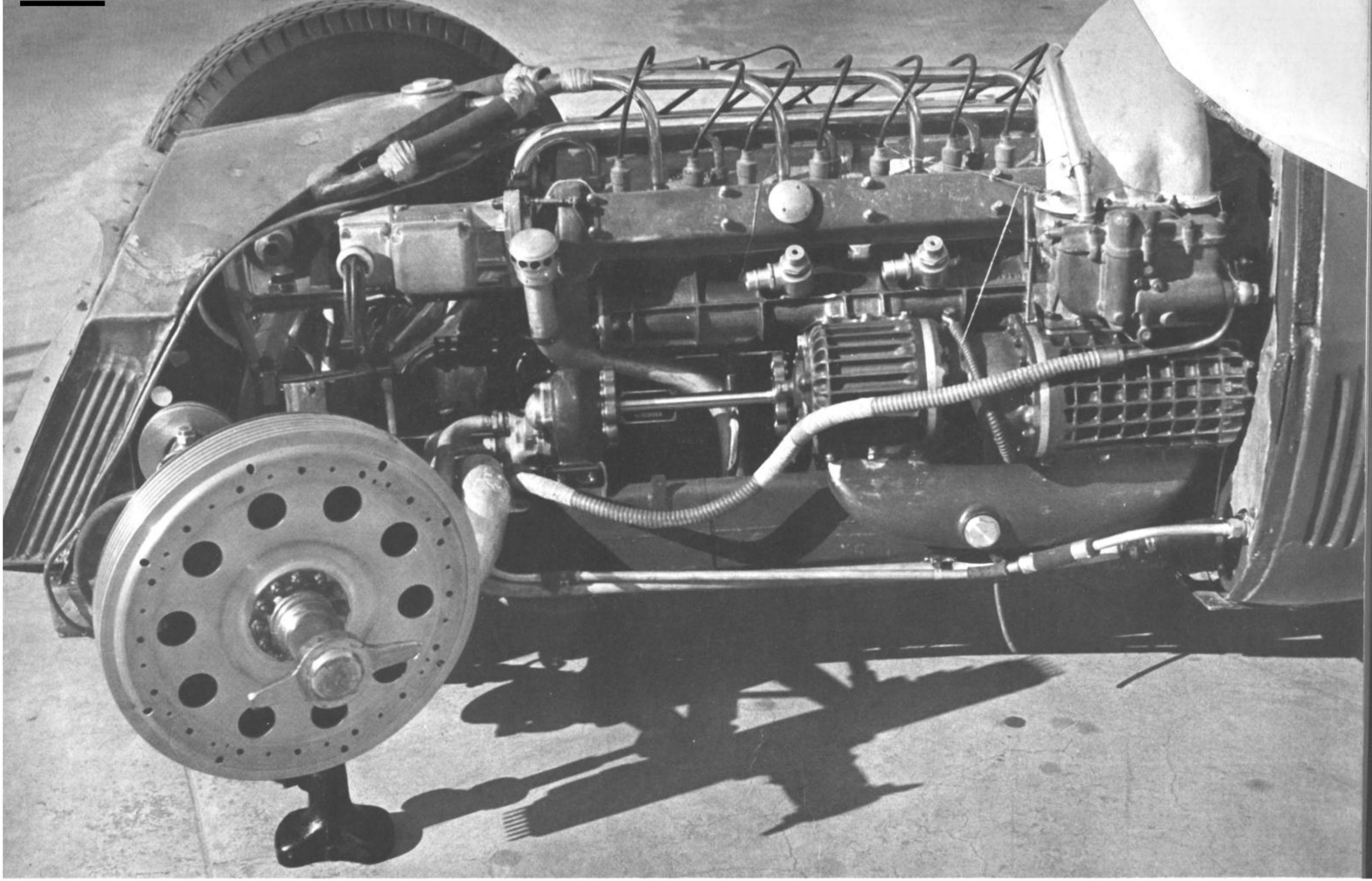

PLATE VIII

DOUBLED POWER- When originally bench tested, the Alfa Romeo engine (eight cylinders, 58 x 88 mm.), supercharged with a single Roots blower, gave 190 b.h.p. at 6,500 r.p.m. In final form as shown here, with triple.downdraught Weber carburetters drawing air from a vent on the scuttle with two-stage Roots blowing and high velocity water pumped directly into the face of the cylinder head, the engine gave a maximum of 404 b.h.p. at 10,500 r.p.m. with a normal rating of 385 b.h.p. at 9,500 r.p.m.

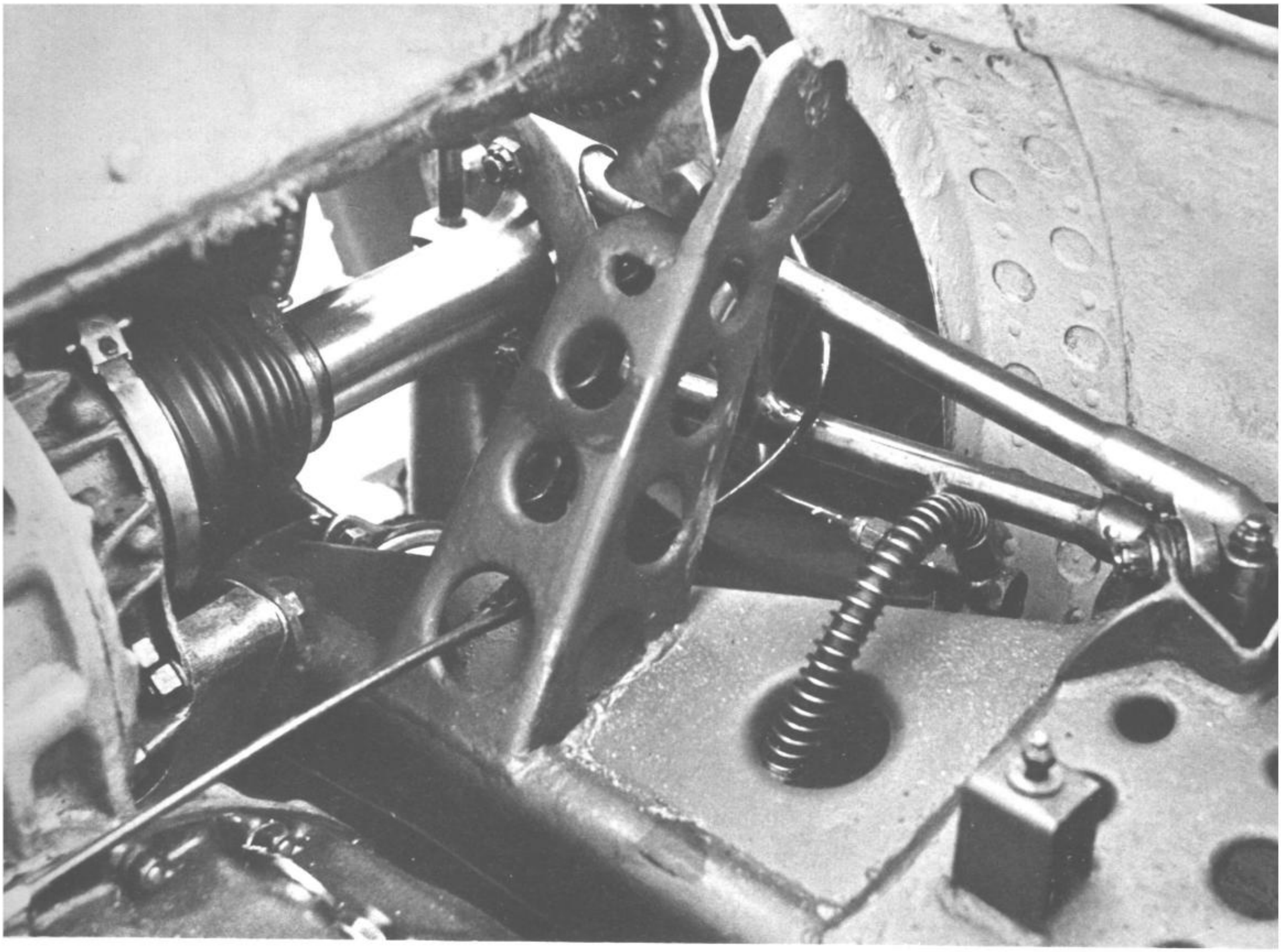

PLATE IX

SIMPLE SET-UP-The Formula I Alfa Romeo had trailing link front suspension with a single transverse leaf spring. At the back, as shown here, a simple swing axle layout was used (also in conjunction with a five-leaf transverse spring), the rear wheels being located by torque and radius arms. As shown, these were mounted on an inclined pivot giving toe-in on full bump in order to promote under-steer, and the axle tubes were given dihedral in normal laden condition for the same reason.

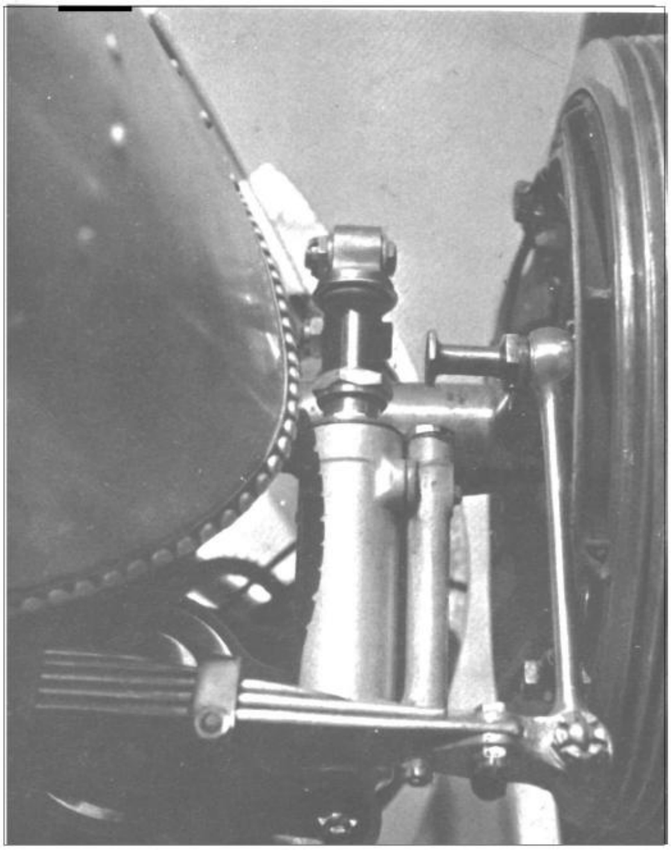

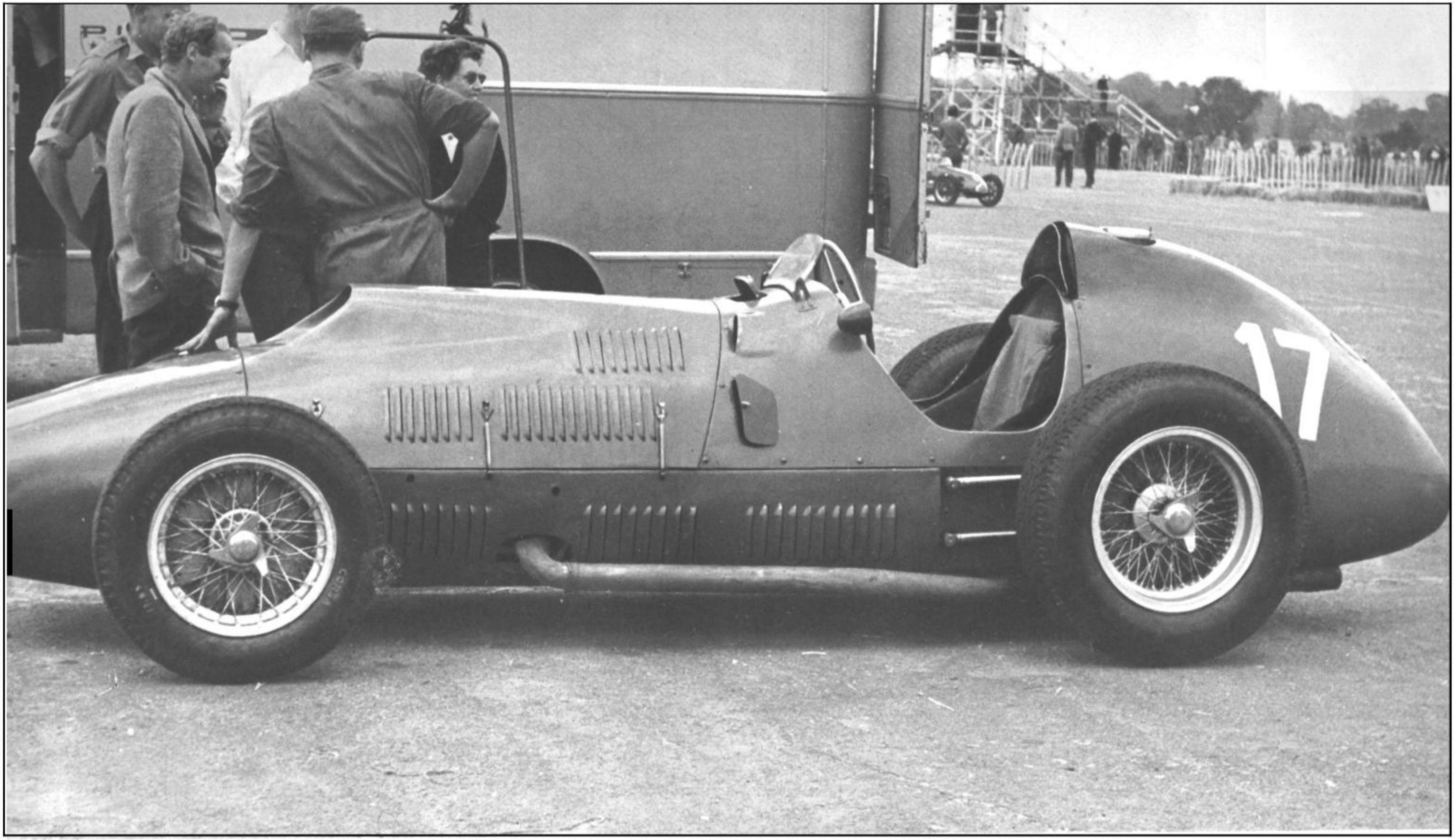

PLATE X

VICTORY BY INCHES -The twelve-cylinder (80 x 74.5 mm.) 4½-litre unsupercharged Ferrari was developed to give 380 h.h.p. for the Formula 1 racing of 1951, a figure subsequently raised to 430 h.h.p. These high outputs, derived.from more than 93 sq. in. of piston area, were combined with good low-speed torque and the car as shown here with ducted air flow and long-nosed cowl can claim to be the fastest road racing car built up to the end of 1953·

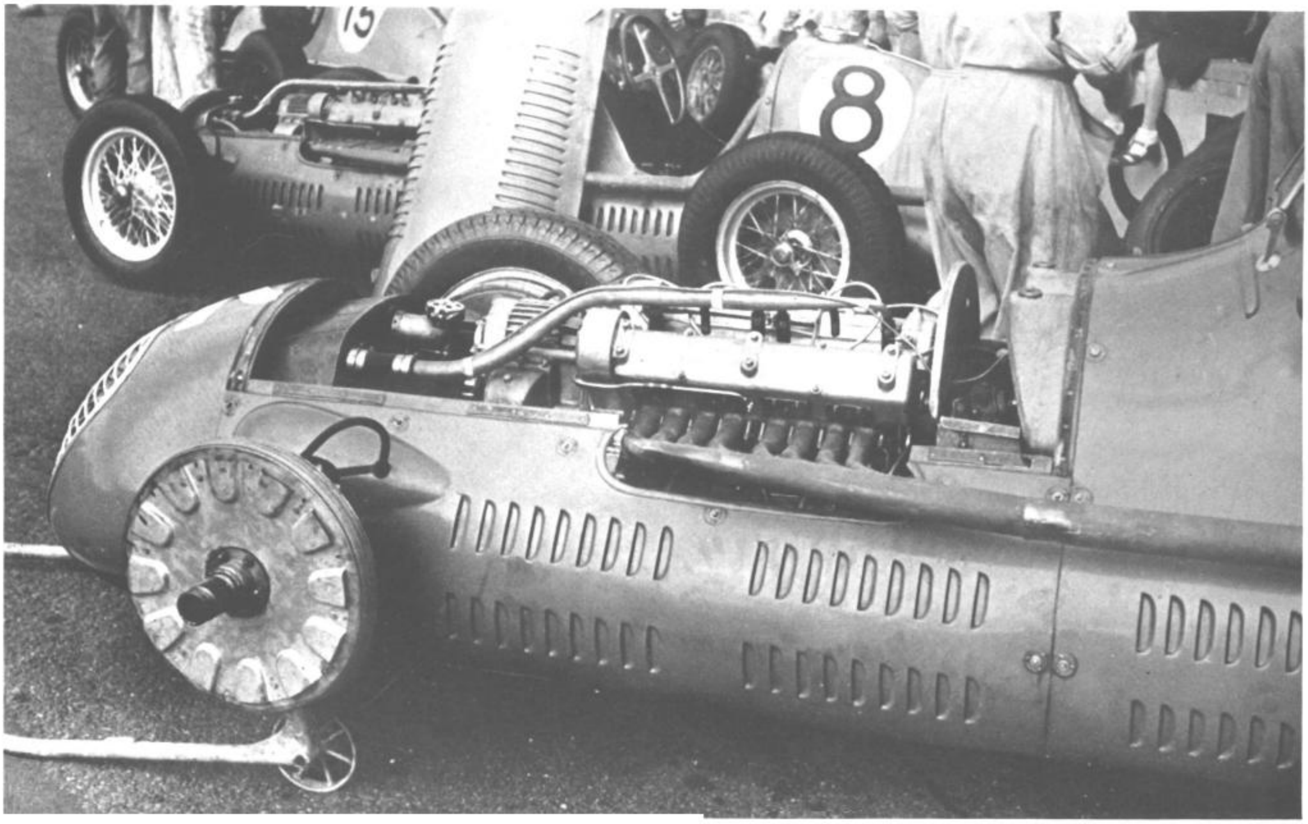

PLATE XI

STOPPING POWER-A mqjor contribution to improved circuit speeds in the post-war period has been greater stopping power obtained by improved friction lining materials and developments in brake drum design. Heat dissipation has been carefully studied, Maserati proneering ducted flow over the face of the drum (above, in 1949) and Ferrari the deeply inset drum with corresponding oflset between tyre centre and king-pin projection.

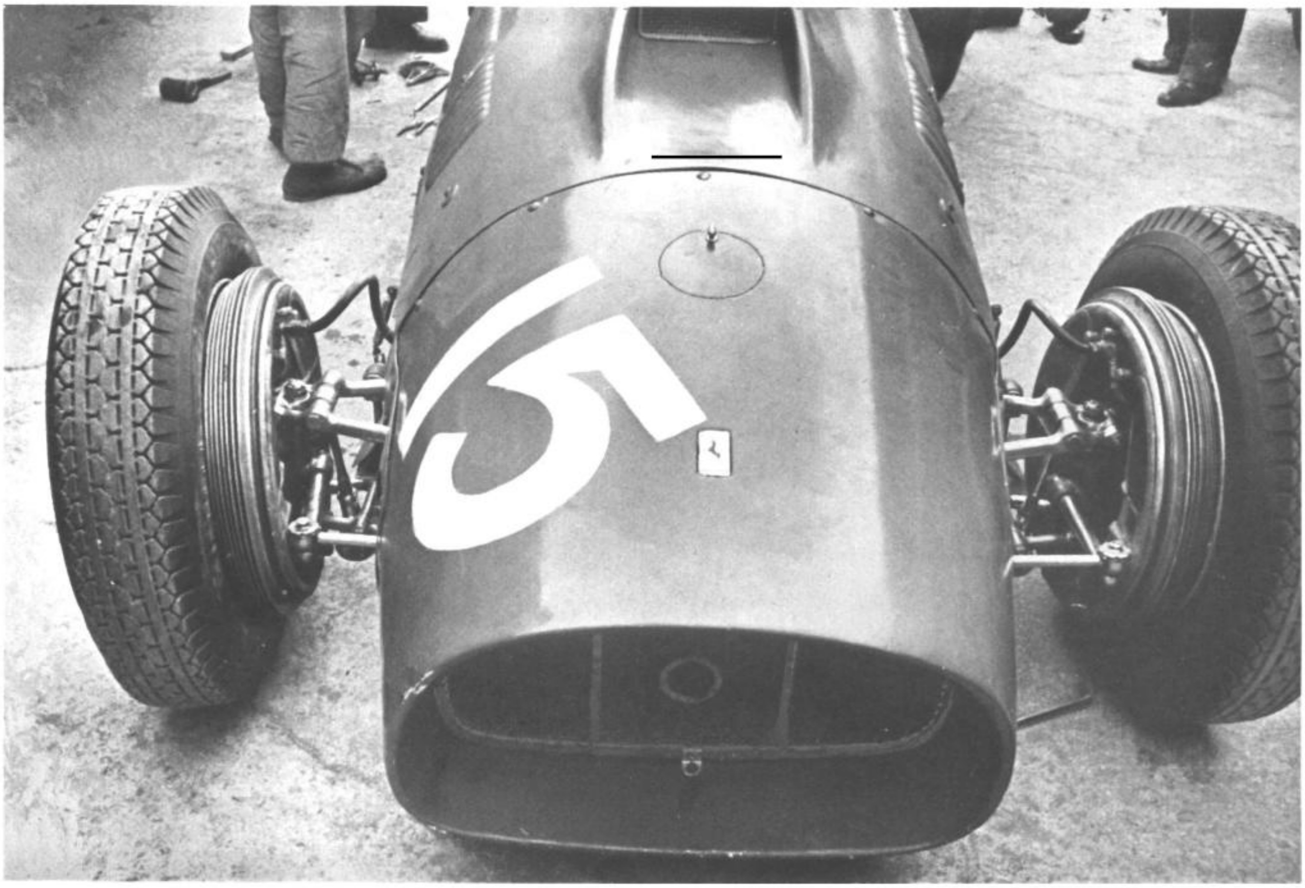

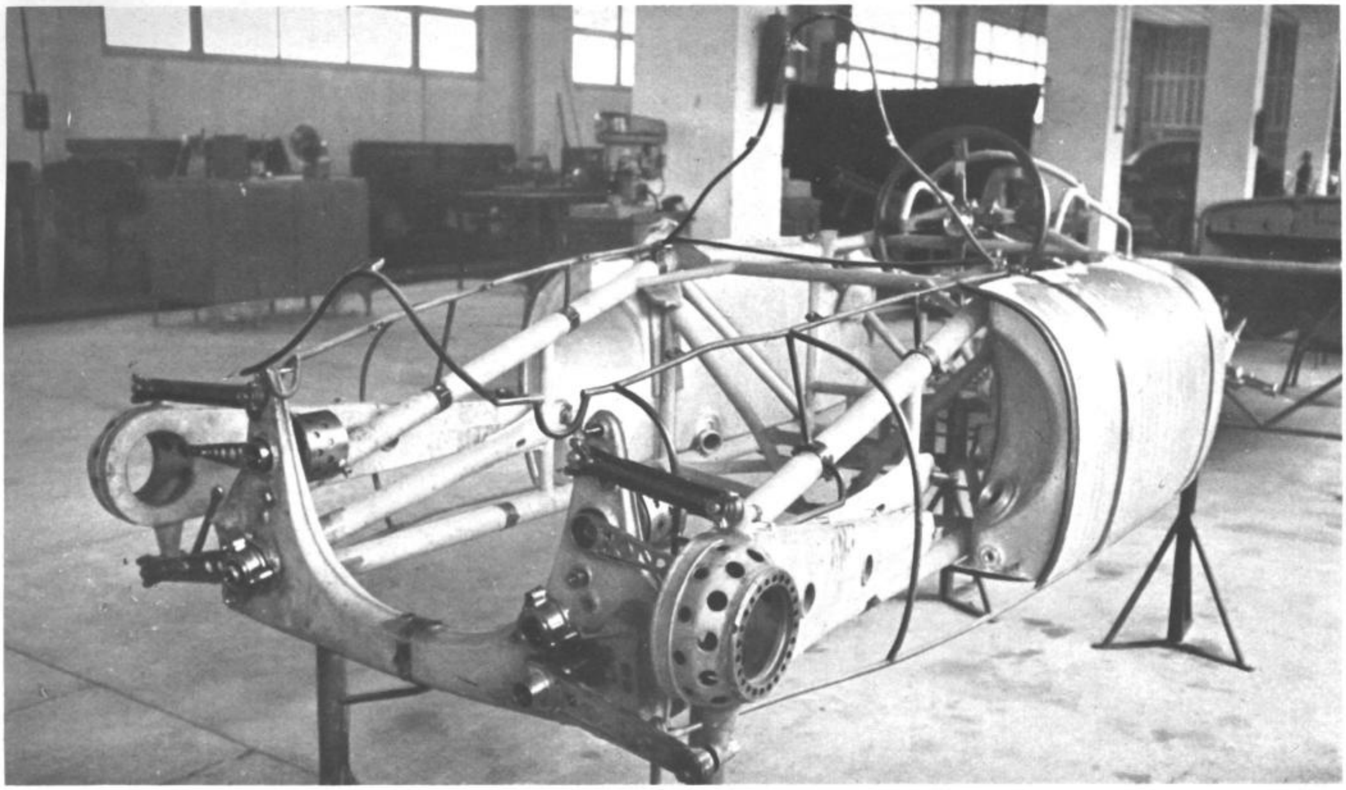

PLATE XII

INCREASING INERTIA -A notable feature of post-war racing car design has been the development of stiff lightweight frames of the " space " type using multiple tubes. Above is seen the frame (and rear suspension layout) of the rear-engined Porsche-designed Cisitalia and below the latest-type 4½-litre Ferrari (showing front suspension elements) in which a tubular superstructure reinforces the main frame members.

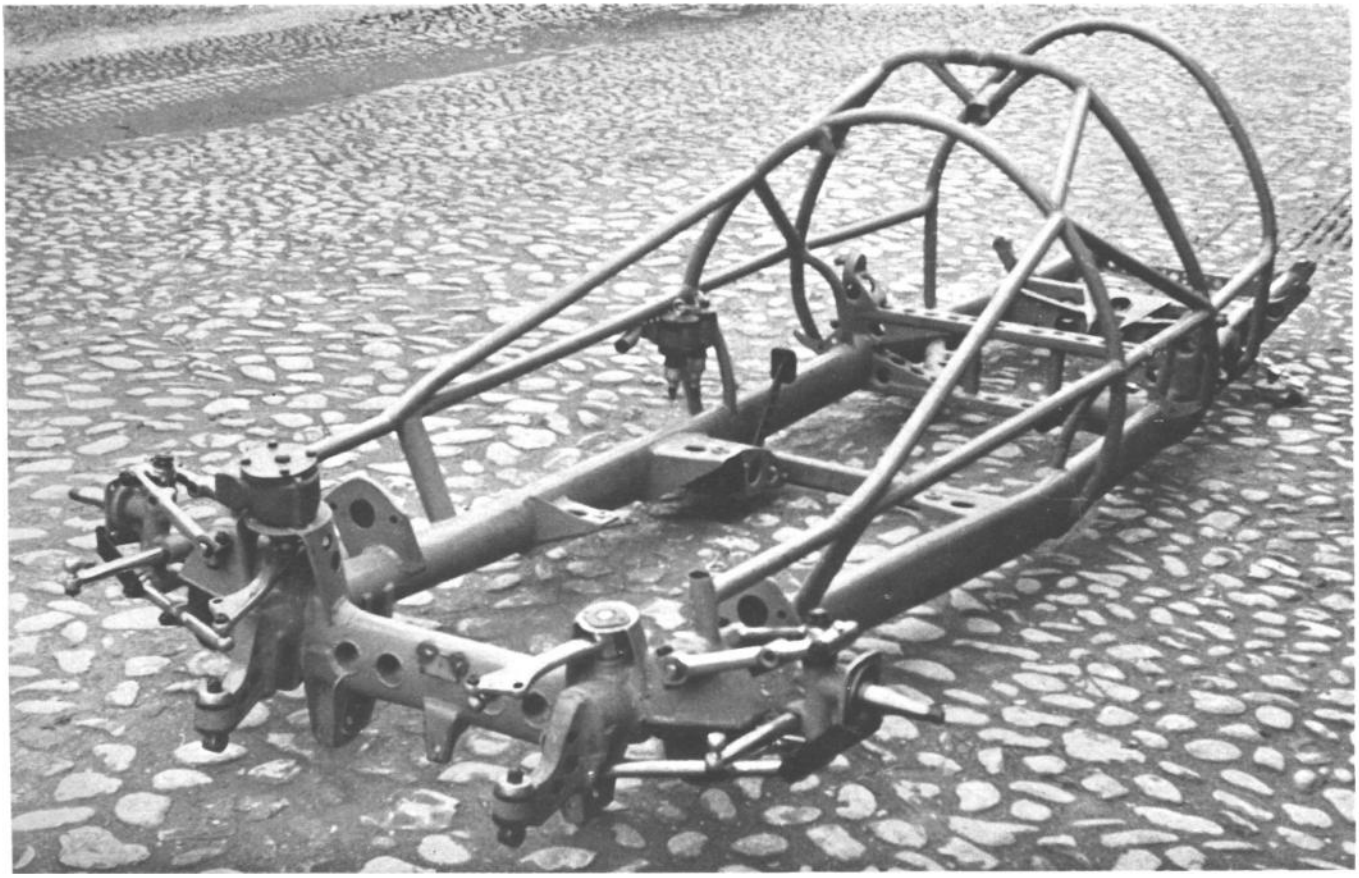

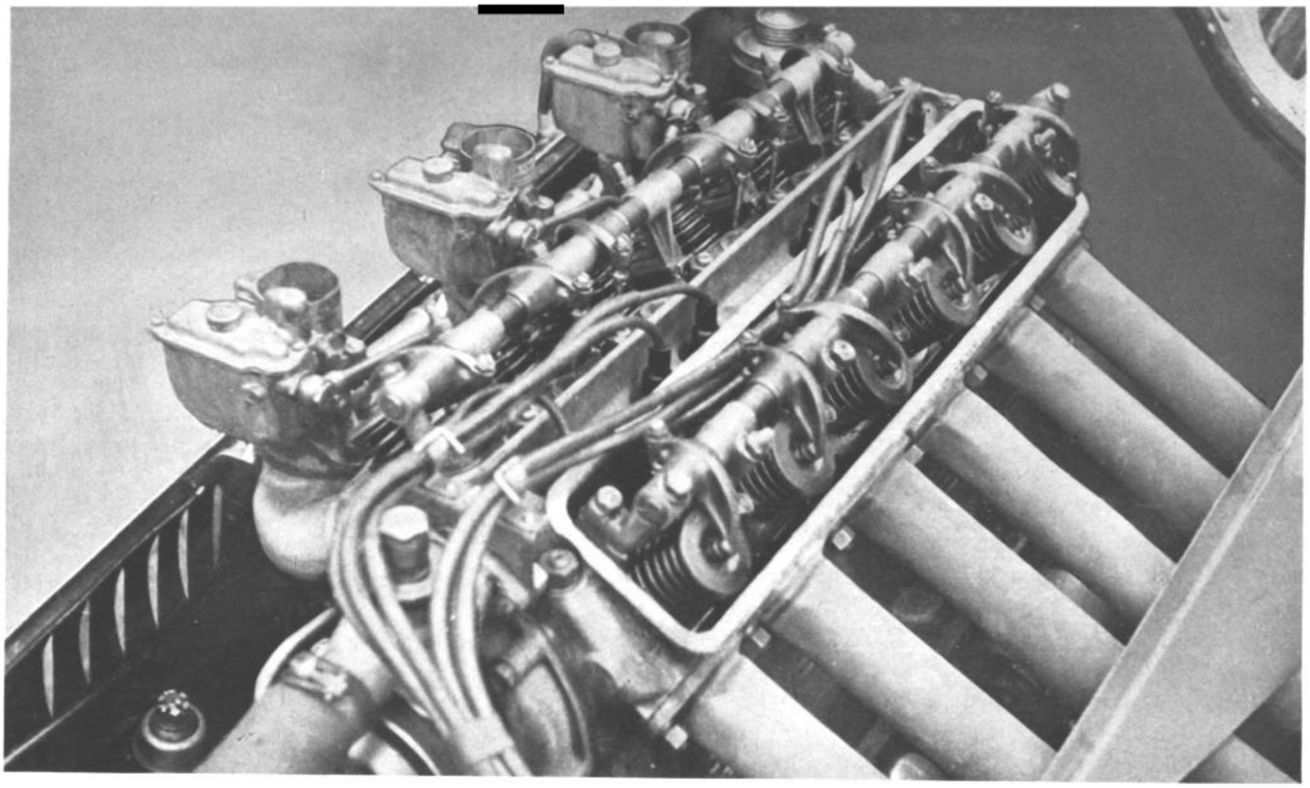

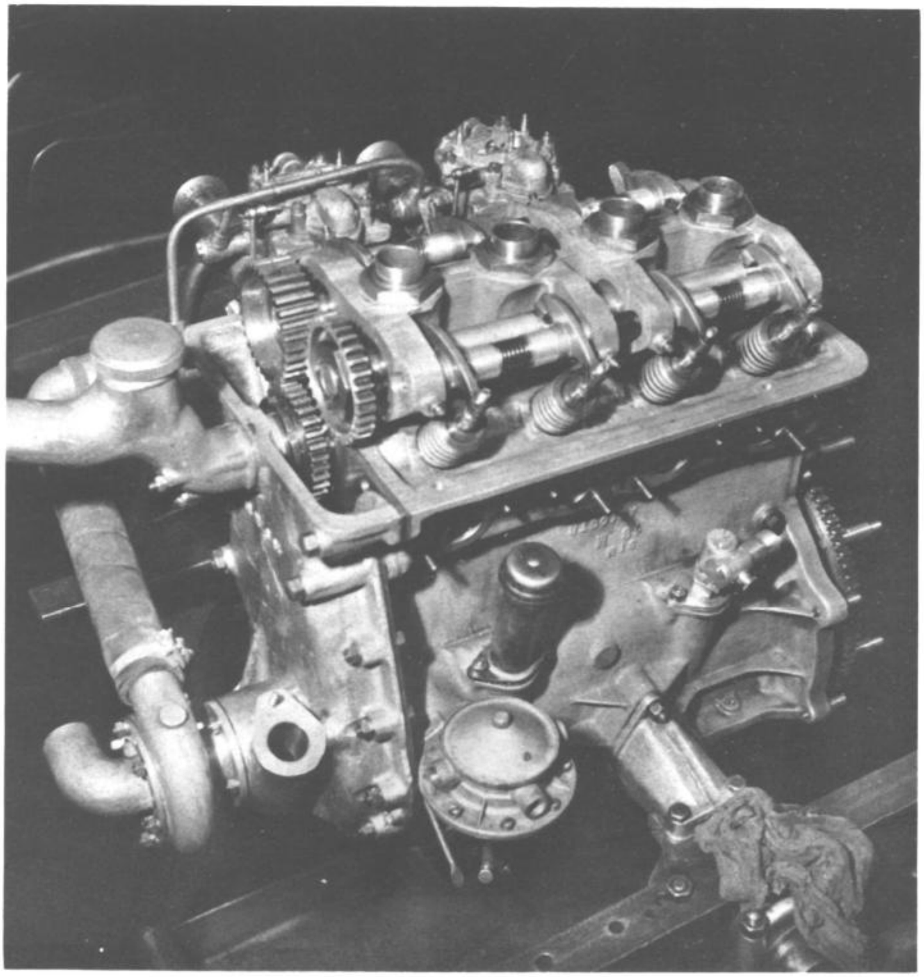

PLATE XIII

TWO PARTS OF GAUL-
With the death, in infancy, of the State-supported Arsenal C.T.A., French contribution to Formula I racing has depended upon Lago's Talbots and Gordini's Gordinis. These Italians chose alternative power units, Lago using six cylinders (93 x 110 mm.) to give 4½ litres unsupercharged with an output of about 270 b.h.p. Gordini used four cylinders (78 x 78 mm.) for a 1½-litre engine, used unsupercharged as shown for early Formula II races, and with a single-stage Roots blower for Formula I events.

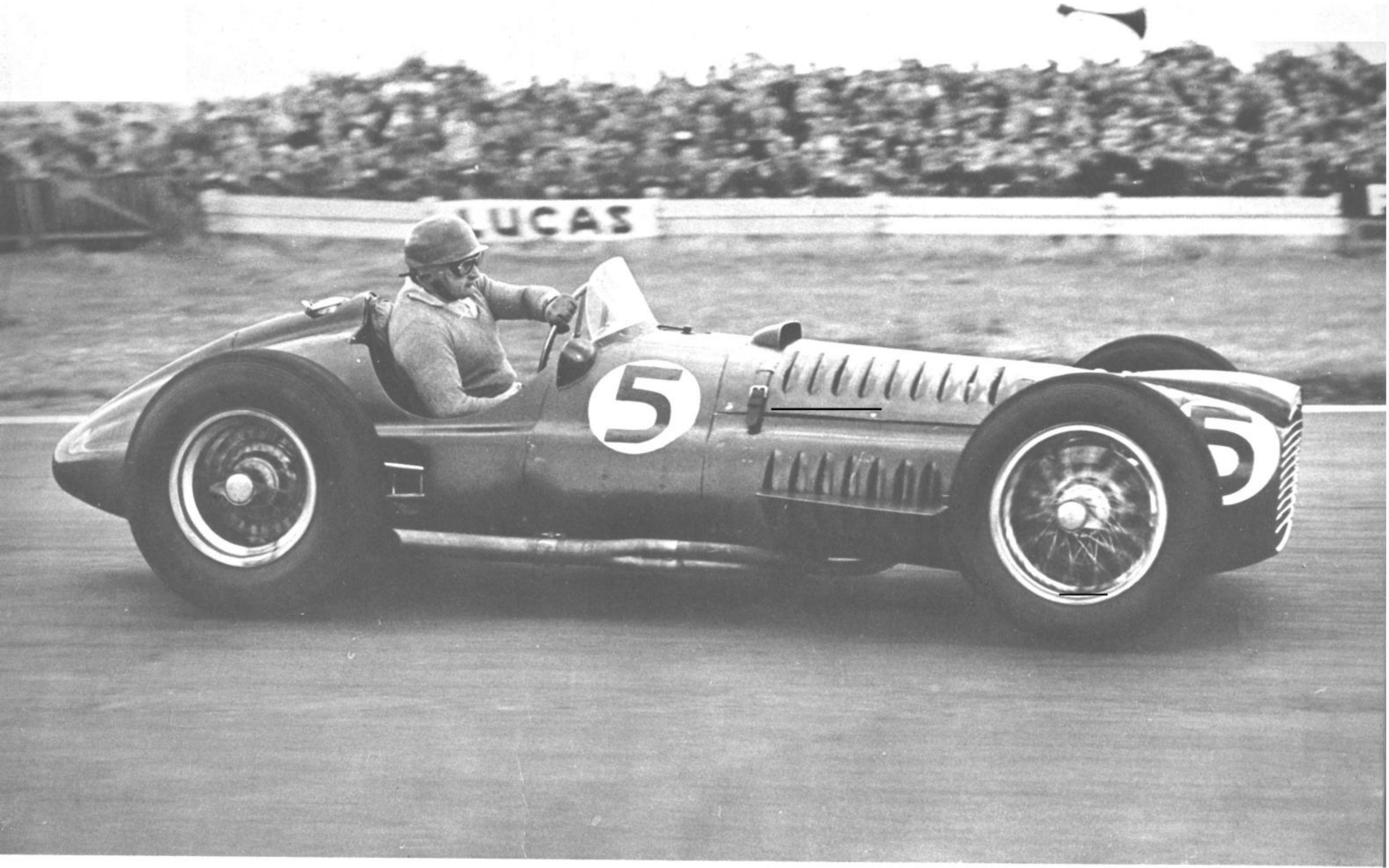

PLATE XIV

POWER WITHOUT GLORY- Developing far more power than any other Formula 1 car, the British B. R. M.s were beset by development and handling problems during the eflective life of Formula I. Subsequently, they combined over 500 b.h.p. with reasonable reliability and, with greater h.p./sq. ft. of frontal area than any car yet built, showed exceptional speed on fast circuits.

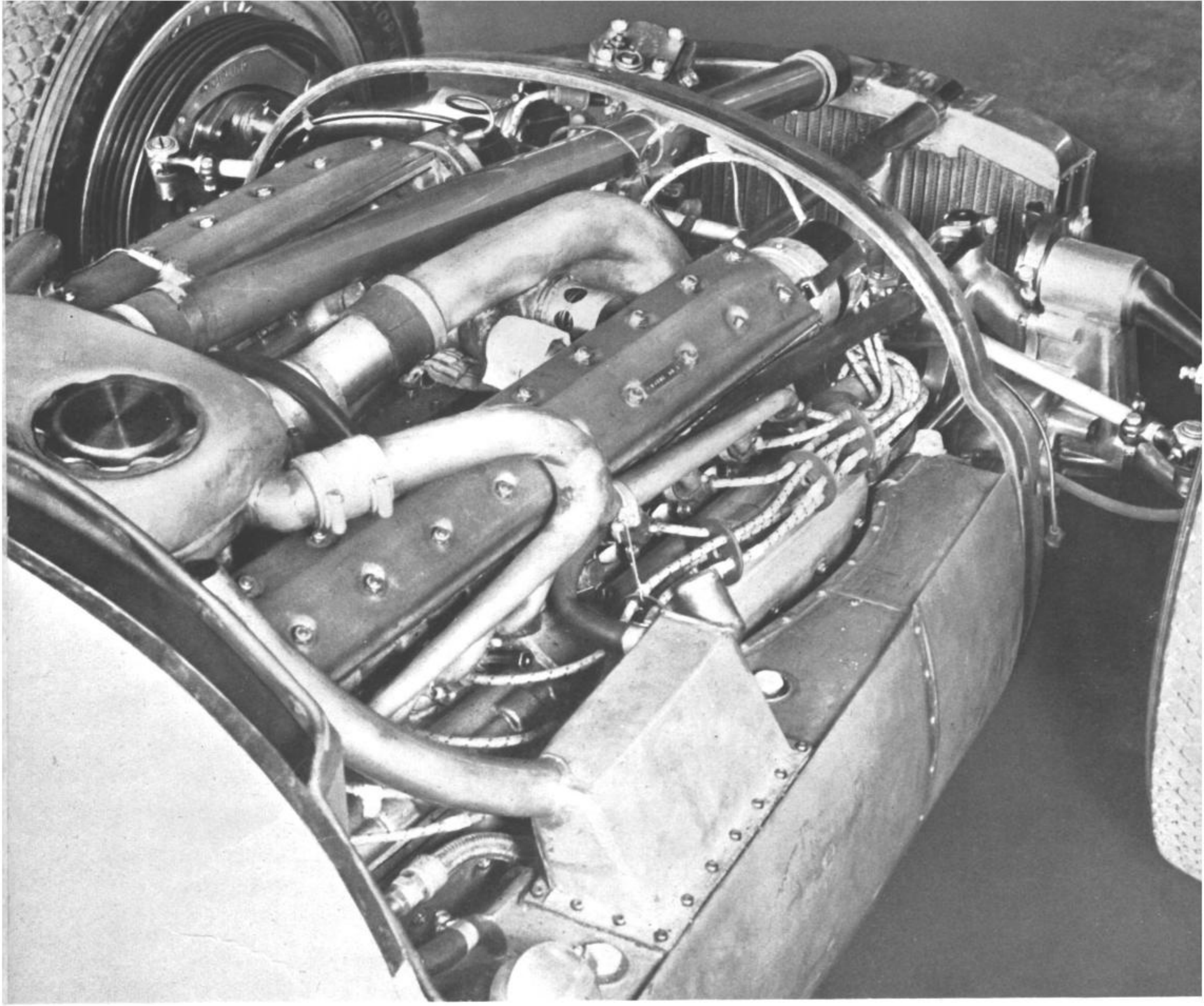

PLATE XV

LOGICAL EXTREMES - The sound premises that maximum h.p. would be obtained by an engine combining the greatest practical piston area and the highest possible boost led the B.R.M. designers to construct a V.16 (49.53 x 48.26 mm.) l½-litre engine designed to operate at over 10,000 r.p.m. with a boost pressure of up to 70 lb. per sq. in. from two-stage centrifugal blowers. The difficulties qf installing such an engine can in some measure be appreciated from this picture. It shows also the complexity of the ignition and water circulation systems.

PLATE XVI

EFFECTIVE SIMPLICITY - Of wholly orthodox design, the four-cylinder (90 x 78 mm.) 2-litre Formula II Ferrari cars achieved some extraordinary performances in the racing seasons of 1952 and 1953. These included the breaking of a number of absolute records of average speed for total race distances, the low power factors being offset by good handling and braking and the possibility of covering 500 km. without a pit stop.

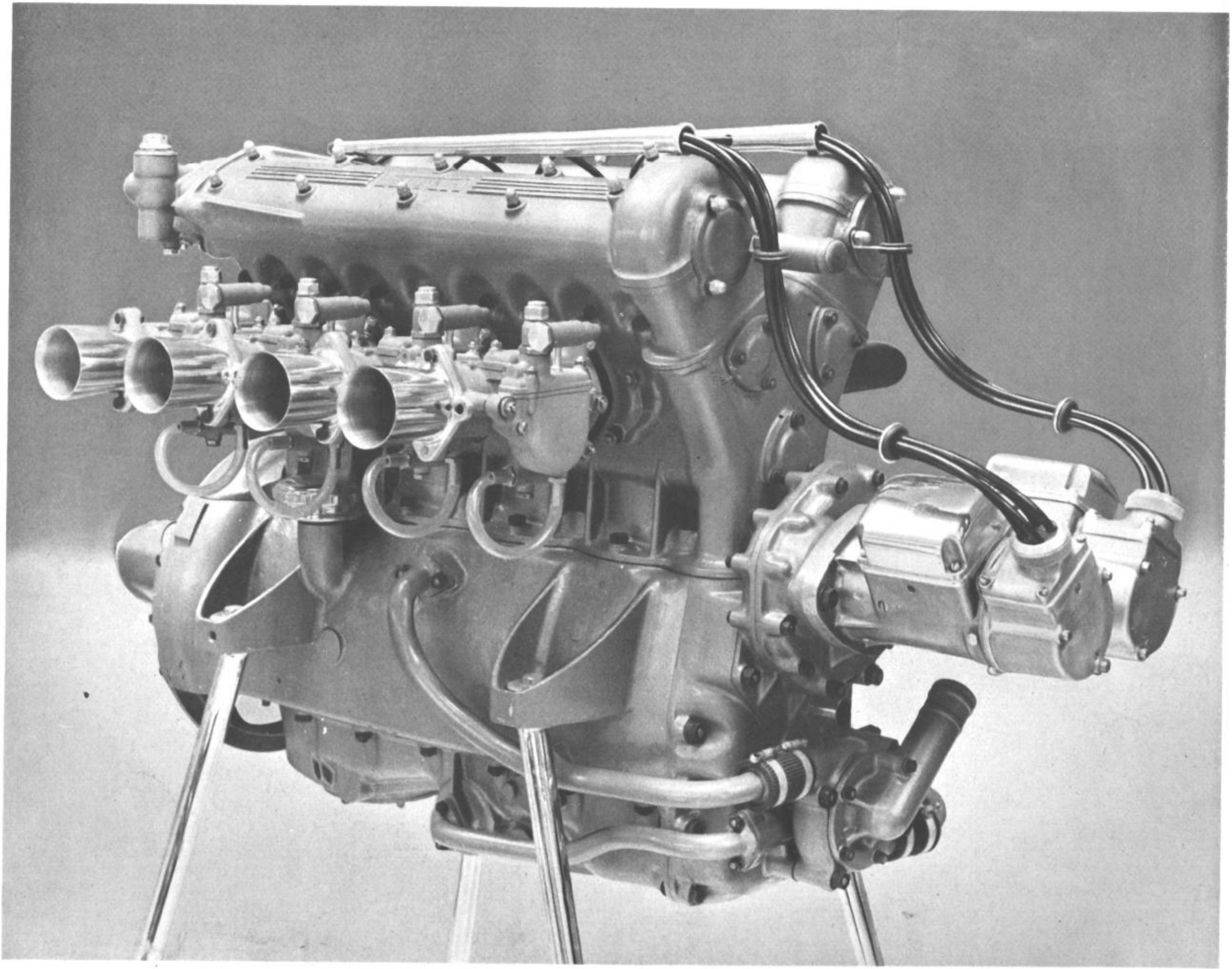

PLATE XVII

POWER FROM THE ATMOSPHERE - The simple four-cylinder Ferrari Formula II engine developed about 180 b.h.p. at 7,500 r.p.m. with the peak of the torque curve at 5,500 r.p.m. Each cylinder was fed by an individual Weber choke and jet assembly with lengthened intake pipes to give ram effect over the useful speed of the engine.

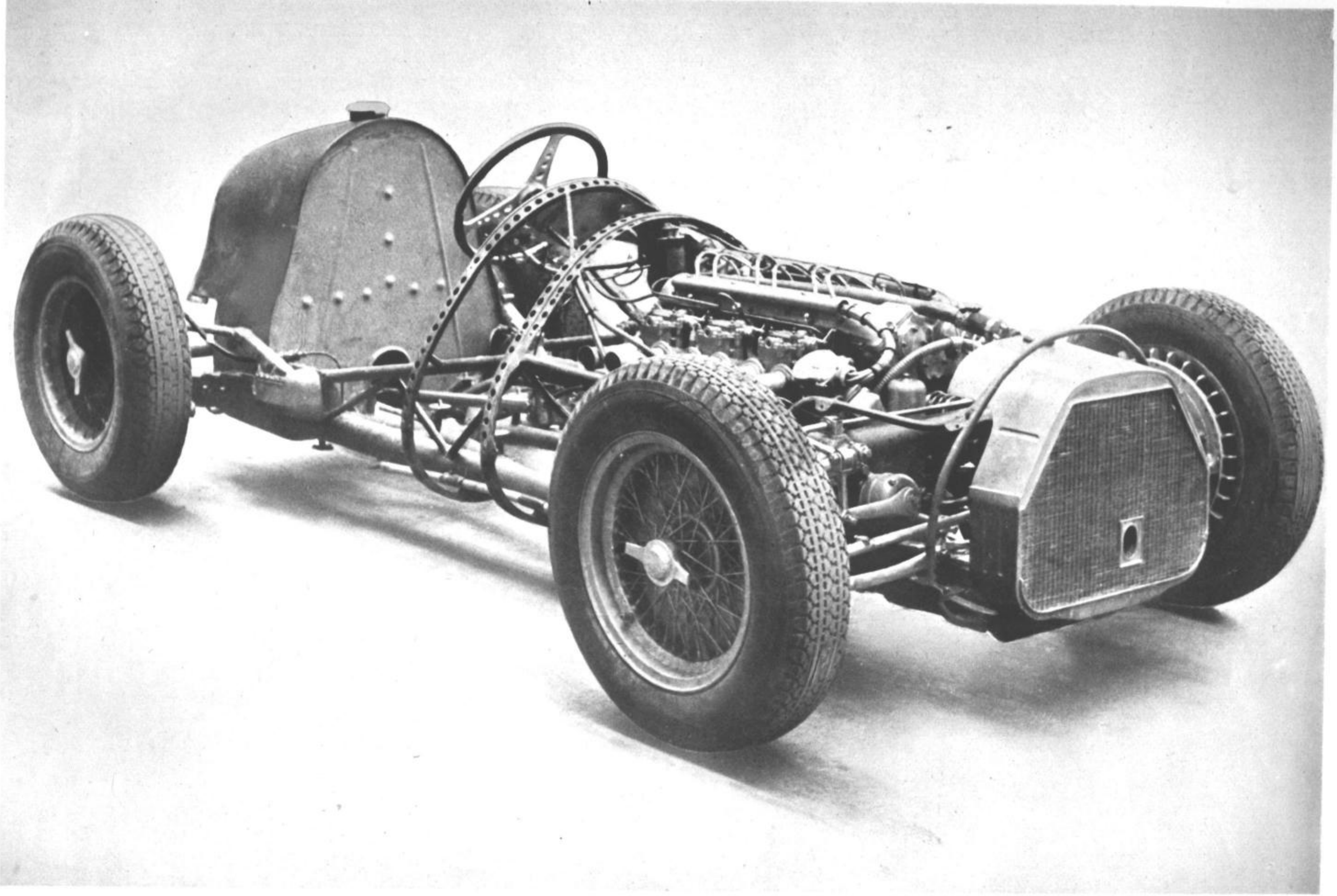

PLATE XVIII

FORMULA II CHALLENGER-The six-cylinder (75 x 75 mm.) Formula II Maserati was developed to give over 190 b.h.p. and, as shown here, the main frame members were stiffened by supplementary small-diameter tubes. In the Grandes Epreuves of 1952-3 this was the only car able to defeat the Ferrari.

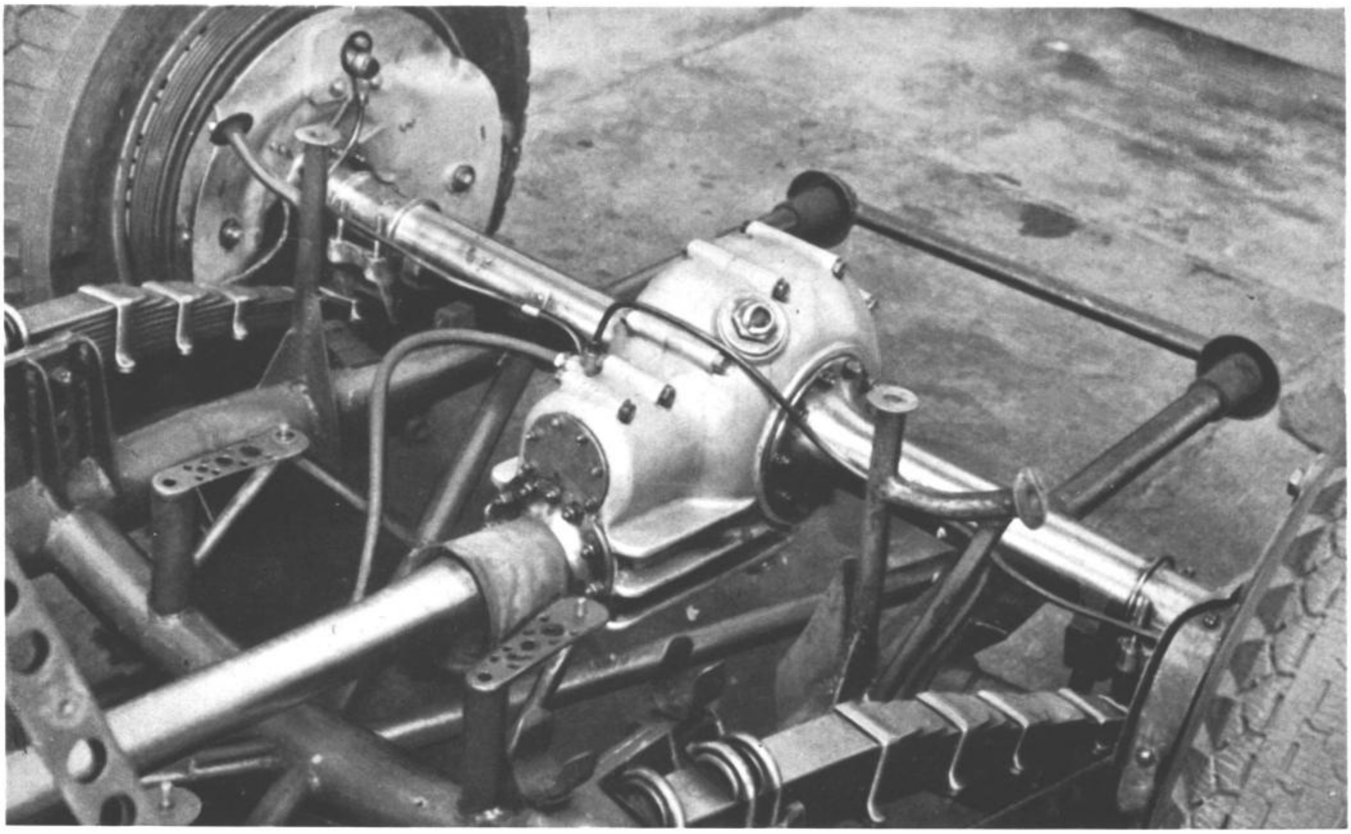

PLATE XIX

FORE AND AFT - Above can be seen a typical Maserati rear axle and rear suspension unit with double reduction gears, steel tubes attached to the light-alloy centre section and outwardly splayed quarter-elliptic springs.Below can be seen the single arm front suspension of the Formula II Gordini.

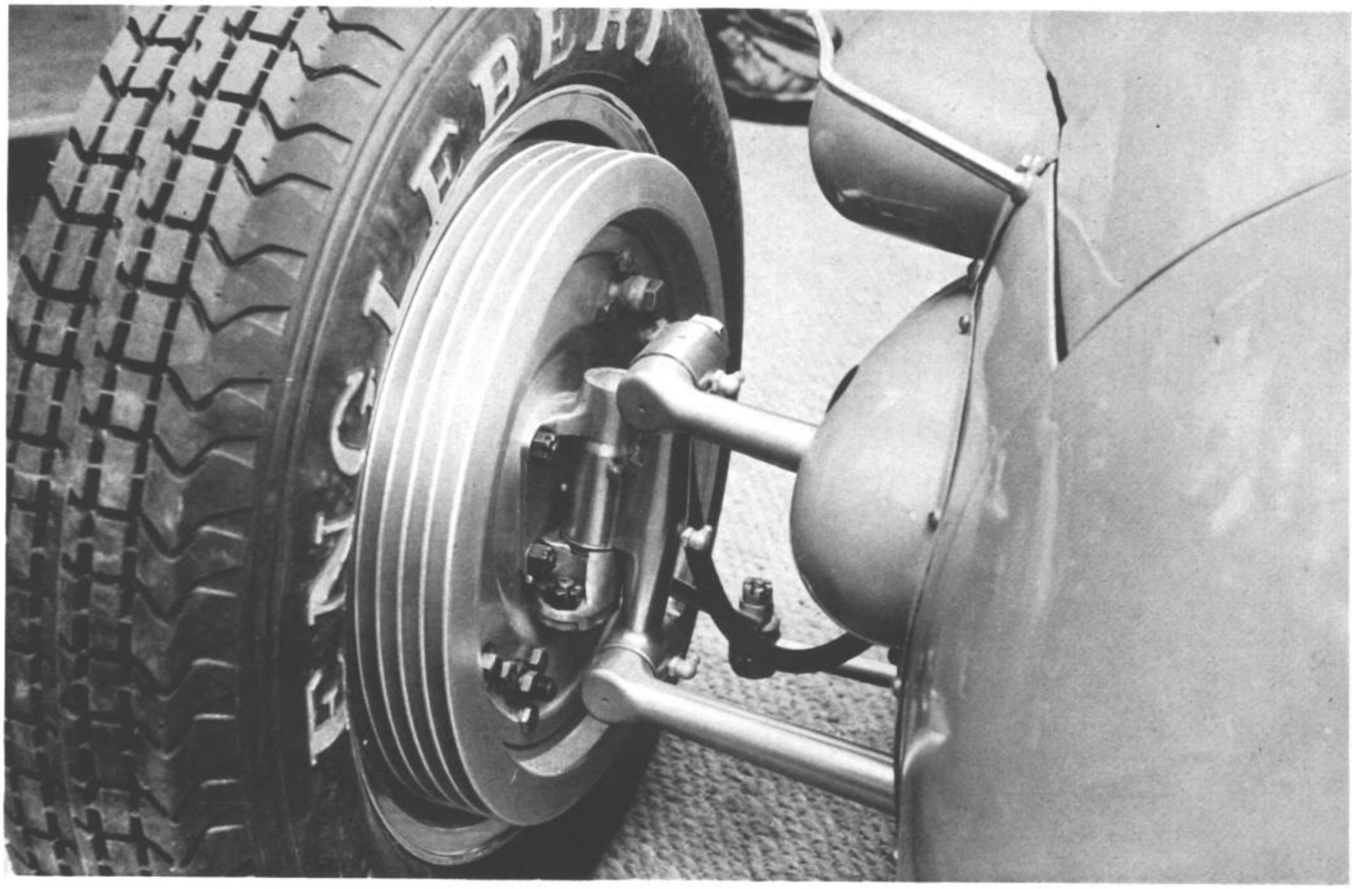

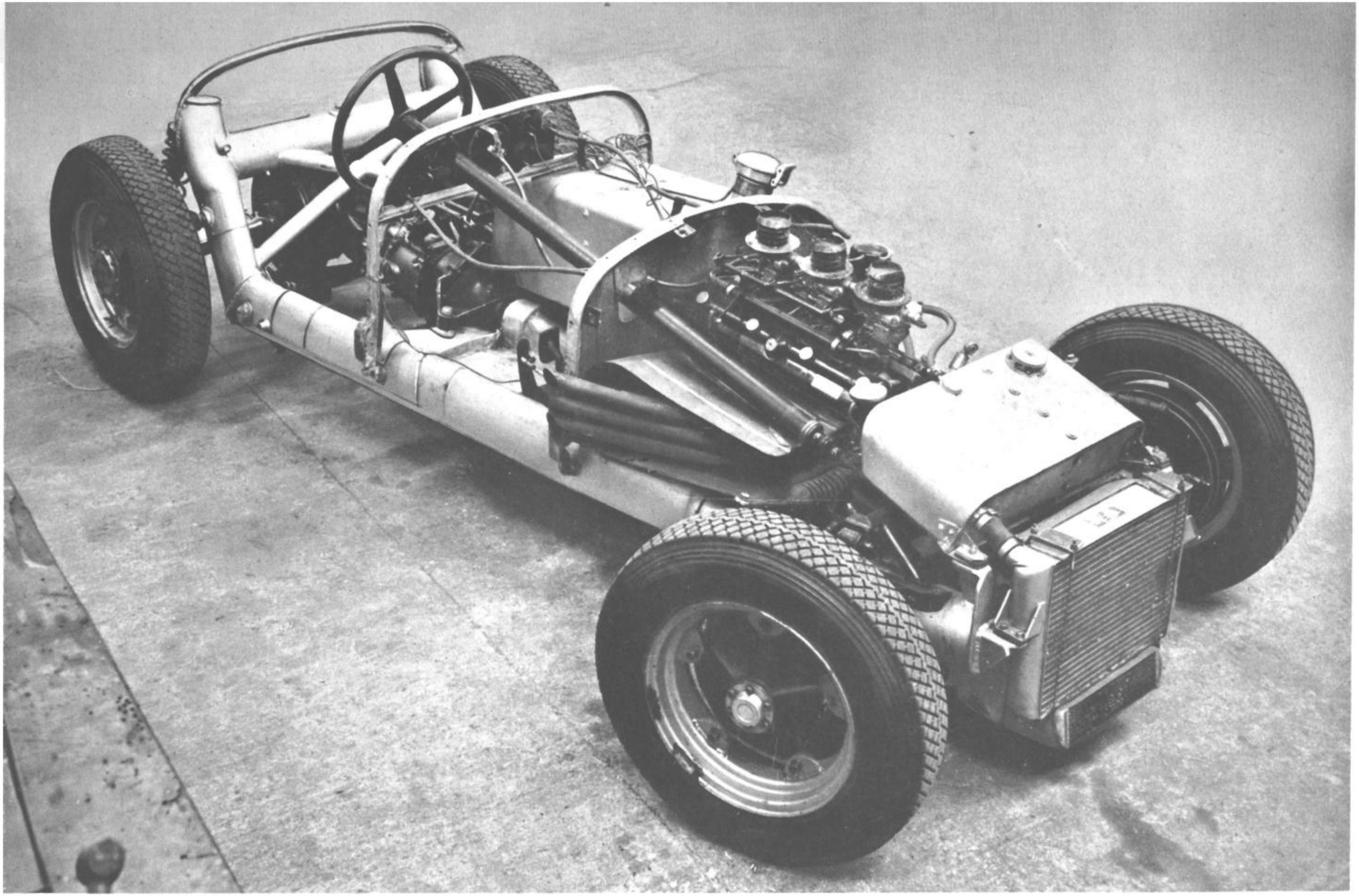

PLATE XX

LIGHTWEIGHT RESEARCH-The Formula II G Type E.R.A. used a chassis frame made from magnesium-zirconium alloy which resulted in a unique combination of simplicity, stiffness and light weight.Other interesting features cf this car included a de Dion rear axle with low roll centre, face-cooled brakes and ducted air flow through the radiator.

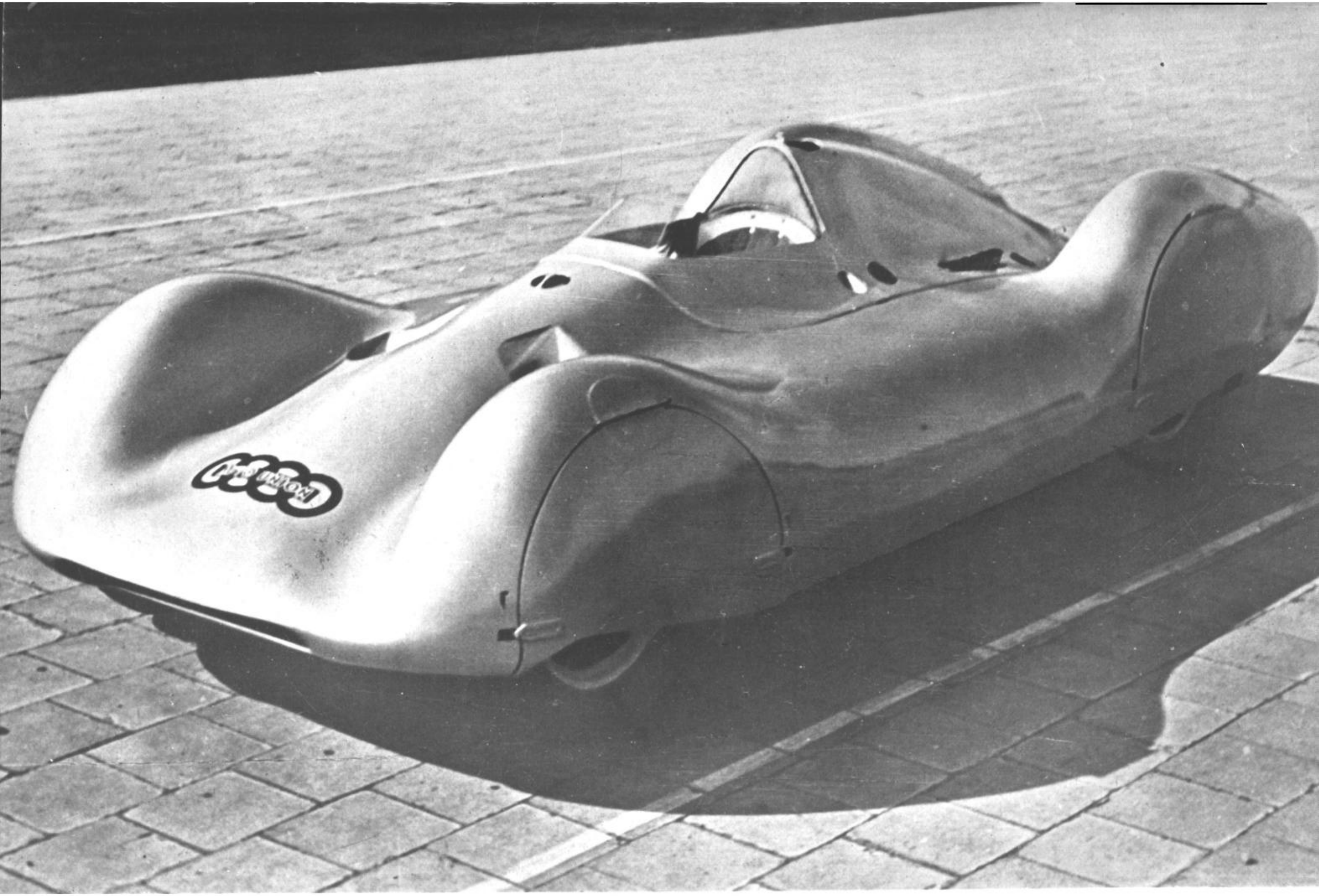

PLATE XXI

LOW DRAG EXPERIMENT - In 1938 Auto Union built two 3-litre rear-engined cars with enveloping bodies.. These proved unstable and were not used for subsequent racing but may nevertheless be considered prophetic of the shape of cars to come.

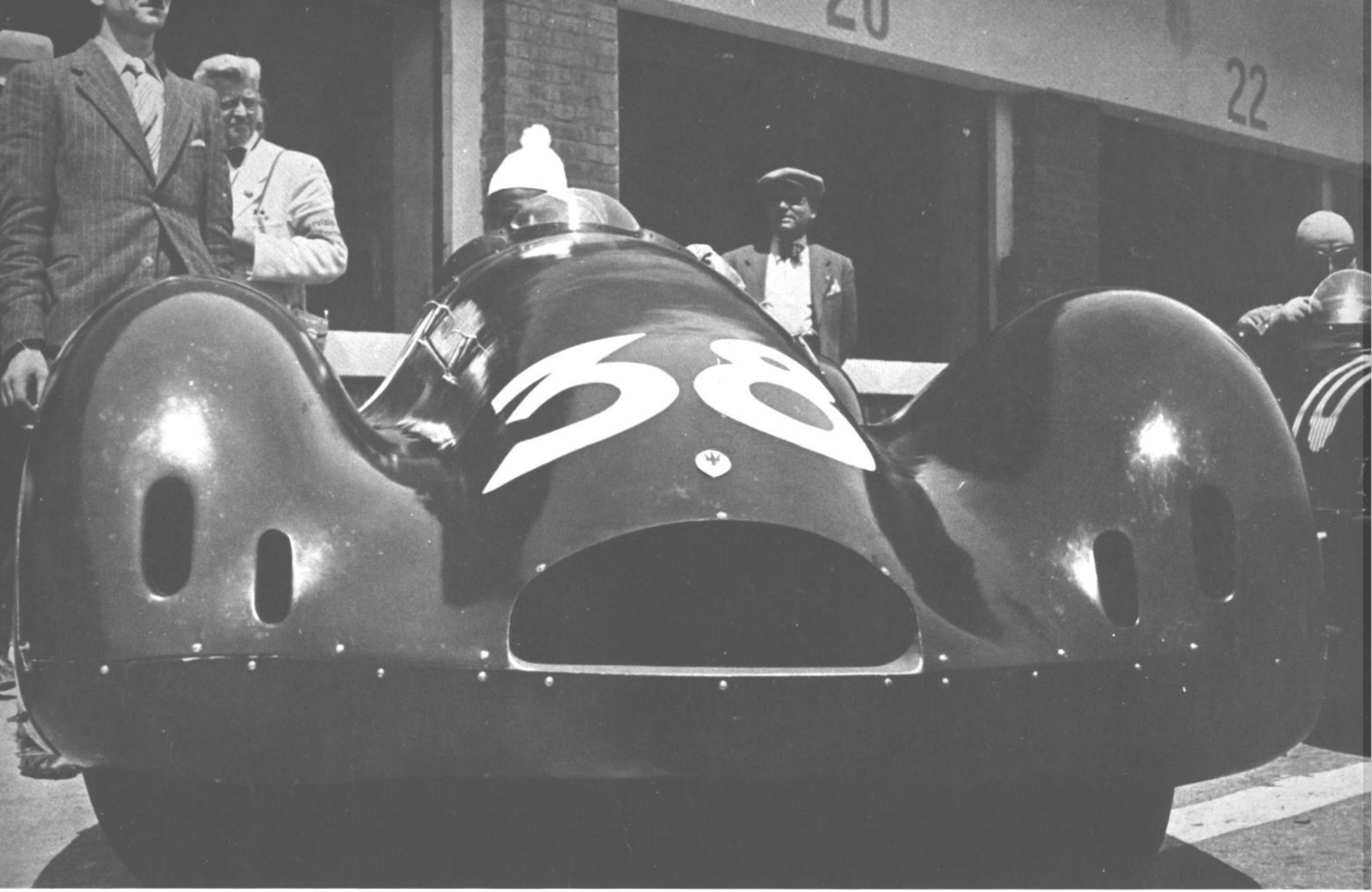

PLATE XXII

SUCCESSFUL STREAMLINER - This cowled-in Maserati appeared at Tripoli for the 1½-litre race of 1939, and although retiring with engine trouble it lapped at 134 m.p.h. in practice, being 0.6 secs. faster than cars with 20% more power. It has foreshadowed the day when the classic shape of racing car developed in the first fifty years of the twentieth century will be seen no more on the racing circuits of the world.

CHAPTER SIX

How Fast Did They Go?

THE opening chapters of this volume, and the whole of Volume I, have been devoted to an objective description of Grand Prix racing and of the principal designs of Grand Prix cars in the period 1906-53. A subsequent section will deal with the design of the Grand Prix car from a different viewpoint ; in it the writer will analyse the various qualities which make up the successful racing car, demonstrate how they have been synthesized over a period of years, and indulge in a measure of subjective comment and criticism. Some account will also be rendered of how external factors, such as the incentives which have impelled manufacturers to enter Grand Prix racing, the finance which they have had at their disposal, the roads over which the cars have had to run and, above all, the international regulations with which they have had to comply, have each and severally influenced the designers in the decisions they have made.

Before proceeding to this new section it may be appropriate to consider, again objectively, the relative speeds of the racing cars which have already come under review. The maximum speeds of the chosen examples have been set out in their specifications, but on road racing cars it is speed over a circuit which is all important. It might seem at first that it would be almost impossible to compare the average speed potentiality of, say, a 1928 car with one built twenty years earlier or twenty years later. As will be shown in a later chapter there is, in fact, a close relationship between maximum speed and circuit speed on cars of similar size, weight and road-holding characteristics. This relationship is that, broadly speaking, circuit speeds will vary as the square root of maximum speeds or equally as the sixth root of h.p./sq. ft. of frontal area.

In the example above cited, there will be wide differences in size, power and road-worthiness, but these variations notwithstanding, we can profitably examine the lap speeds set out in the tables of Volume I, and in the foregoing chapters of Volume II, with a view to comparing similar cars on differing courses, or alternatively differing cars on similar courses. It is possible to study the case of the similar car on differing courses at a very early stage in motor racing, in the years preceding Grand Prix racing proper in fact.

The 13.6-litre Gobron-Brillé, which ran in the first Grand Prix of all, in 1906, was unchanged, dimensionally or in design, since 1903, in which year this model had been first constructed. A study of the lap times in the 1903 Circuit des Ardennes shows that the Gobron, driven by the professionals Duray and Rigolly, was some 7 per cent slower on a lap than the 70 h.p. Mors driven by the amateur Vanderbilt. We can, therefore, say that in this year the Gobron, as a car, was perhaps as much as 10 per cent slower than the winner of the 1903 Paris-Bordeaux, which was the last great town-to-town race.

In 1904, the Gobron was in competition with the 100 h.p. Mors, in the French eliminating trials for the Gordon Bennett Cup, which took place on the Circuit de l'Argonne, and here it was 6 per cent slower. In 1905 we see it 9 per cent slower than the 13-litre Renault which ran in the French eliminating trials for the Gordon Bennett Cup, and finally, in 1906, it is 10 per cent slower than the similar 13-litre Renault which won the first Grand Prix de l'A.C.F.

To sum up, if the speed of the Gobron had remained unchanged from 1903 to 1906, we could deduce that the 1903 Mors was very nearly as fast as the 1906 Renault but in the nature of things, the speed of the Gobron-Brillé would increase from year to year. If the difference in five years amounted to, say, 5 per cent, then we can safely say that the 1903 Gobron-Brillé was 15 per cent slower on a circuit than the 1906 Grand Prix winner. As we know already that it was between 7 per cent and 10 per cent slower than the Mors which won the Paris-Bordeaux, it follows that the Mors, in turn, was between 5 per cent and 8½ per cent slower than the 1906 car. We might reasonably take 6 per cent as a fair estimate ; as the fastest Le Mans lap made by the Renault was 72.1 m.p.h. we might anticipate that the Mors would lap at a little over 69 m.p.h., and as it averaged 65.3 m.p.h. over the 342 miles between Paris and Madrid, it was obviously capable of so doing. It would thus seem that there was relatively slow progress in the development of the racing car, between 1903 and 1906, an example of this being that the 1904 100 h.p. Mors was timed at 88 m.p.h. over a flying kilometre on the Argonne course and the 1906 Renault at 92 m.p.h. at Le Mans.

Having now illustrated how to establish lap speed indices (which without undue egoism may perhaps be called " Py factors "), by going backwards in time relative to the first Grand Prix, let us see how the system can be applied from 1906 onwards. We can do this with an interesting equation which takes into account, first, two similar cars and, secondly, two identical circuits.

Owing to the fortunate coincidence that the Renault Co. ran the same type car in 1907 on the Dieppe circuit as they had run at Le Mans the previous year, coupled with the fact that the 1908 race was run over the same roads as those employed in 1907, we have a chain of circumstances which enable us directly to compare the performances of all the Grand Prix cars running in these three years. Hence, by the study of lap times we can award a lap speed index for the cars running in these races and by making a corresponding analysis of subsequent events we can, with a very fair degree of accuracy, relate the average speed capabilities of all racing cars built from the earliest times.

If appropriately we give an average lap speed index of 100 to the 1906 winner which had a timed maximum speed of 92.2 m.p.h., we then have corresponding indices in the 1906 race of 101.4 for the Richard-Brasier (which made the fastest lap) and 98.6 for the Fiat which was runner-up in the race as a whole.

If we now carry forward this lap speed index figure of 100 for the Renault performance on to the Dieppe circuit of 1907 we shall find that the winning Fiat has a lap speed index of 102, that the De Dietrich which made the fastest lap has an index of 103.2, whereas the Richard-Brasier which was faster than the Renault in the previous year is now slower, the best car of this make having a speed equivalent to index of 97.5.

It will be observed that, using the 1906-7 Renault as a datum, the lap speed of the fastest car rose by 1.7 per cent in one year, but substantially greater gains were made in the ensuing 12 months. On the identical Dieppe circuit of 1908 the relative performances of the principal makes were :

Mercedes (record lap) with index of	107.5
Richard-Brasier	106.8
Renault	105.6
Fiat	105.5
Clement-Bayard	104.6

It is possible to check these relations based on fastest lap speeds by reference to maximum speeds timed over a kilometre for Faroux of *l'Auto.* These were :

Clement-Bayard 104.8 m.p.h. ; Mercedes 104 m.p.h. ; Benz, de Dietrich, Fiat and Richard-Brasier 101.3 m.p.h. ; Renault 99 m.p.h. ; Itala 97.8 m.p.h. ; and Panhard 90.5 m.p.h.

These figures show that the 1908 Renault was 7 per cent faster " flat out " than the 1906-7 model, and the winning Mercedes 13 per cent faster.

We may also analyse performance in these early years of motor racing by referring to speed trials and hill climbs. Of the latter the Mont Ventoux event in France is particularly useful, since the course is 13 miles 750 yards long, and it was used for racing cars between 1902 and 1934. The times from 1903-5, that is the Gordon Bennett era, and from 1907-9 were as follows :

TIMES AT MONT VENTOUX 1903-9

Year	*Driver*	*Car*	*Time*
1903	Danzeau	Richard-Brasier	25 min. 25 sec.
1905	C. Cagno	Fiat	19 min. 30 sec.
1907	H. Rougier	De Dietrich	19 min. 30.4 sec.
1908	P. Bablot	Richard-Brasier	19 min. 8.8 sec.
1909	”	” ”	18 min. 41 sec.

These results support the thesis that there was little gain in speed between 1905 and 1907, but that the 1908 cars were much superior. This view is confirmed again by reference to the times made by Gordon Bennett or Grand Prix type cars in various speed trials. Here we have evidence for both standing start and flying start speeds as follows :

SPEEDS OVER STANDING MILE 1903-9

Year	*Course*	*Car*	*Driver*	*Speed*
1903	Nice	60 Mercedes	H. Braun	56.5 m.p.h.
1904	Nice	60 Mercedes	W. Werner	62.3 m.p.h.
1905	Brighton	120 Mercedes	J. E. Hutton	74.4 m.p.h.
1909	Indianapolis, U.S.A.	1908 G.P. Benz	B. Oldfield	83.0 m.p.h.

STANDING KILOMETRE SPEEDS

1906	Le Mans	1906 G.P. Itala	Fabry	52.4 m.p.h.
1909	Tervueren	1908 G.P. Mercedes	T. Pilette	67.4 m.p.h.

SPEEDS FOR FLYING MILE OR KILOMETRE

1902	Deauville	Mors	Gabriel	84.7 m.p.h.
1903	Nice	G.B. Mercedes 60	H. Braun	72.7 m.p.h.
1904	G.B. Trials	Richard-Brasier	L. Thery	74.5 m.p.h.
1905	Ostend	G.B. Darracq	L. Wagner	95.6 m.p.h.
1909	Ostend	1908 G.P. Mercedes	C. Jenatzy	112.0 m.p.h.

Accepting the postulate that lap speed varies with the square root of maximum speeds, the increase in average speed of the 1908 Mercedes over the 1906-7 Renault should be 5.7 per cent. This agrees with the results obtained in Grand Prix racing to within an error of only 0.2 per cent. Moreover, on the basis that maximum speed should vary as the cube root of the engine power the output of 90 b.h.p. for the Renault, as claimed by the makers, leads to an assumption of 128 b.h.p. for the Mercedes for which the claimed power was 135 b.h.p.

The 1912 Peugeot which won the next Grand Prix organised officially by the Automobile Club de France was a car exhibiting great technical progress but had an engine substantially smaller than the 1908 Grand Prix winner, and offered no great increase in basic performance factors.

The qualification is an important one, for whilst the car ran over the identical circuit which had been used in 1908 it was required to do so during two days for a total of 956 miles, whereas the earlier event had been confined to one day with a total mileage of 479. It is therefore scarcely surprising that the final winning speed was 68.45 as compared with 69 m.p.h. ; the best lap 75 m.p.h., as compared with the 1908 Mercedes 78.5 ; and that the Peugeot's timed maximum during the race of 99.86 m.p.h. was lower than the 104 m.p.h. recorded four years earlier by the Mercedes.

There is another side to this picture. During practice Peugeot was timed to beat the 1908 lap record and over the first ten laps of the Dieppe course the Peugeot was 4.5 per cent faster than the winning 1908 Mercedes. It also climbed the Mont Ventoux hill in 5 per cent less time than the 1908 Richard-Brasier (Index 106.8). If we were to take these figures on their full face value we should give an average lap speed index to the Peugeot of 107.5 plus 4.5 = 112 if using the Mercedes as a datum, or 106.8 plus 5 = 111.8 taking the Richard-Brasier as a guide. Yet it seems unlikely that the Peugeot was capable of lapping the Dieppe circuit at as much as 82 m.p.h., and it was certainly running in a very stripped and highly tuned condition in its hill climb appearance. A balance struck between the two index figures given by the foregoing calculations and the 102.5 representing the actual lap speed during the race gives us a fair assessment for the average speed index for the 1912 Grand Prix Peugeot of 108.8.

The 1913 Delage, in turn, when running on the Le Mans circuit used for the

Sarthe Grand Prix had a lap speed 5 m.p.h. faster than the 1912 Peugeot on the same course the previous year. If, therefore, we consider the Peugeot and the Delage cars of 1913 to be roughly equal in speed we must conclude that both could average some 6 per cent faster than the Dieppe and Le Mans speeds of the 1912 Peugeot. There is an additional piece of evidence that the 1913 Peugeot was 1 per cent faster than the 1912 model at the Mont Ventoux hill climb, the driver being Georges Boillot in both years.

We have, however, just concluded on quite reasonable evidence that the realised speed of the 1912 Peugeot was at least 6 per cent less than the potential owing to the big required mileage of the French Grand Prix and the absence of competition at Le Mans. It is therefore probably sound to conclude that the 1913 5.6-litre Peugeot was only slightly faster than the 1912 7.6-litre car and that it had an average speed index of 109.5 as compared with the original Grand Prix winner.

When we come to analyse the speed capabilities of the 1914 cars we are confronted with the fact that the Lyons course cannot be calibrated against previous circuits and that by the almost immediate outbreak of war thereafter subsequent data concerning the cars is meagre. Certain evidence from the U.S.A. remains.

In 1915 Dario Resta used a 1913 5.6-litre Peugeot for the opening event of the year, but his subsequent change to the 1914 type was in any case involuntary as the older model was outside the 300 cu. in. (4.9-litre) limit imposed for 1915. In the 1915 Indianapolis Race, de Palma, driving the 1914 Mercedes car, does not appear to have attempted any exceptional speeds in practice, but he covered the first 300 miles at an average speed of 90.3 m.p.h., whereas the 1913 Delage car averaged only 83 m.p.h. over the same distance in 1914. Lap speeds of over 109 m.p.h. were also realised by the Peugeot on a variety of board tracks in the U.S.A. In a detailed account of the 1914 Mercedes racing cars, issued by the manufacturers in 1915, they state that initial tests showed a speed of 102.5 m.p.h., which was later raised to 120 m.p.h. This last would represent an increase of 30 per cent over the 1906 cars in maximum speed and an expectancy of a 15 per cent gain in overall circuit speed, i.e., an average index of 114. Unfortunately we can make no direct check on the accuracy of this estimate, except on the track of Indianapolis, as this was the only course used by the winning designs of 1908, ‘12, ‘13 and ‘14.

Taking our previously established average speed index for the 1908 Mercedes at 105.5 the Indianapolis performances gives us an index of 112 for the 1914 car which we can accept, as it gives an inferred, and quite reasonable, maximum speed of 116 m.p.h.

The 1919 4.9-litre Ballot, which was the fastest car built immediately after the break caused by the war-time years, had an engine only 10 per cent larger than the 1914 Grand Prix winner but eight cylinders instead of four, thus permitting higher r.p.m. within a given limit of piston speed.

The question of how the Indianapolis Ballot can be related to previous and subsequent Grand Prix cars is, strictly, irrelevant, for it never ran in an internationally recognised Grand Prix. Indianapolis and Brooklands tracks provide the sole criteria of its performance, with lap speeds of 105.5 m.p.h. and 112.17 m.p.h. respectively. Additionally, at Brooklands, the car set up the following internationally recognised records :

Standing kilometre	65.14 m.p.h.
Standing mile	75.44 m.p.h.

Inferred average kilometre to mile	101.5 m.p.h.
Flying kilometre	118.36 m.p.h.

(26/10/25) A.I. Nos. 7, 8 and 9.

Making due allowance for the effect of a riding mechanic we can put the estimated road speed at 115 m.p.h. maximum and applying the square root law in comparison with the first Grand Prix winner we are given an average index of 113.5. From this stage forward, however, it is imperative to take account of the use of front brakes which, although not used by the Ballot on the above-mentioned tracks, were fitted when it took part in the Targa Florio race of 1919. If we give a bonus of 5 per cent to the added circuit speed on account of this development we derive an index of 118.5.

It is unfortunate that, as with the 4.9-litre Ballot, there is no direct link between the average speed capabilities of the 1920-l 3-litre Grand Prix cars and their predecessors of 1914. At a critical period in automobile design we are thus deprived of incontrovertible figures and have once again to rely upon deductions from performances at Indianapolis and at Brooklands. Some relevant lap speeds on the former track may be summarised thus :

1913 Grand Prix Peugeot	99.85 m.p.h. (100)
1914 Grand Prix Peugeot	98.5 m.p.h. (98.8)
1919 Ballot	104.7 m.p.h. (104.8)
1921 Ballot	100.75 m.p.h. (101)

At Brooklands we have :

1913 Peugeot	105.97 m.p.h. (100)
1919 Ballot	112.17 m.p.h. (106)
1921 Ballot	107.34 m.p.h. (101.2)
1922 Vauxhall	108.27 m.p.h. (103)

(The figures in parentheses give the percentage position.)

The performance factors of the Vauxhall and Ballot cars are remarkably similar, the b.h.p. per sq. ft. being 9.3 and the output per ton 95 and 98 b.h.p. respectively. For this reason, although the Vauxhall did not compete in a Grand Prix we are justified in using some known statistics regarding its performance as a yard-stick. These are :

Standing kilometre	69.75 m.p.h.
Standing mile	78.69 m.p.h.
Inferred average kilometre to mile	95.5 m.p.h.
Maximum speed	111.85 m.p.h.

(6/10,25: A.I.; No. 7)

It will be observed that the maximum speed is 6 per cent below that of the 4.9-litre Ballot *supra.*

Let us now sum up. The Indianapolis lap speeds of the 1921 Ballot were between 1 and 2 per cent better than the 1913-4 Grand Prix cars, but 4 per cent slower than the 1919 straight-eight Ballot. The Brooklands figures tell a somewhat similar story for the Ballot was 2 per cent faster than the 1913 Peugeot and a little under 5 per cent slower than the 1919 Ballot. Assuming the Vauxhall and the 3-litre Ballot to have comparable maximum speeds they were both about 5 per cent slower than the 1919 Ballot.

We have already established an average speed index of 118.5 for the larger car, and on the basis of the above figures it would seem fair to assume that the 3-litre models were 6-7 per cent slower in maximum speed or 2½-3 per cent inferior in average speed capabilities. On these admittedly somewhat tenuous grounds we may argue that the correct index for the 3-litre cars of 1921-2 (Ballot, Duesenberg and Vauxhall) was 15 per cent better than the 1906 winner, and that they were faster than any cars built up to that time, the 4.9-litre eight-cylinder Ballot alone excepted.

In 1922 and 1923 the 2-litre Fiat cars were dominant, firstly with their steel-cylindered, roller-bearing sixes, which triumphed at Strasbourg and had a walkover at Monza, and in the following year with their eight-cylinder supercharged models of basically similar design which broke down in the French Grand Prix but once again scored an easy win in Italy.

It is, unfortunately, impossible to establish directly how the performance of the Fiat compares with previously built Grand Prix cars as it ran in only two races, and those on circuits not previously used. We can, however, make a very close estimate of the performance in theory and also in comparison with cars of similar weight, frontal area and maximum power.

It is fair to calculate that a car with 7.6 h.p./sq. ft. would have a maximum of 105 m.p.h., and we can check this estimate against the performances of 1½-litre supercharged engines of similar design and output fitted with similar bodies. The four-cylinder 1923 Fiat, 1½-litre, for example, was almost a replica of the previous year's six-cylinder Grand Prix car and lapped Brooklands at 101.64 m.p.h. The 1924 Talbot Darracq developed 102 b.h.p. and with 8.5 h.p. per sq. ft. lapped Brooklands at 106 m.p.h., whilst a single-seater version of this make and type achieved 114.71 m.p.h. over a flying kilometre (31/8/25, A.I.5).

From these facts we can infer that the maximum speed of the Strasbourg Fiat could not have been more than 110 m.p.h. and is certain to have been over 102 m.p.h. To take the mean between these, 106 m.p.h., is almost certainly a very close approximation to the truth. The inferred average speed index brings us to a figure of 111, and with the 5 per cent allowance for front-wheel brakes, makes the car slightly slower than the 1914 Grand Prix winner. Technically, this may be considered a satisfactory result, bearing in mind that the engine size had been diminished 65 per cent measured in terms of capacity and 26 per cent measured on piston area.

Fiat supremacy, decisive in effect, was brief in time, and in 1924 Sunbeam and Alfa Romeo shared the honours.

Both Bugatti and Delage continued with their previous types of car running unsupercharged and paid the inevitable penalty of deficiency in horsepower ; the Delage giving 120 b.h.p. and the Bugatti about 90 b.h.p. The Sunbeam and Alfa Romeo engines, however, both developed approximately 140 b.h.p., and we can make an interesting and direct comparison between the 1922 Fiat and the 1924 Sunbeam since, with the exception of supercharging, they are of almost identical design and were developed by the same engineer. The data table reveals that the Sunbeam engine developed 50 per cent more power, 36 per cent greater b.m.e.p. and 40 per cent more h.p. per sq. in. of piston area.

The P2 Alfa Romeo had a similar performance, and whereas it is certain that the 1922 unsupercharged 2 litres did not exceed 110 m.p.h., the Alfa Romeo was timed over ten kilometres at 123 m.p.h. at the beginning of 1924.

When this make of car ran on the Monza track at the end of 1924 the lap speed was 4.2 per cent greater than the supercharged Fiat, and this brings the average speed index for the car to 120. Earlier in the year at Lyons, however, the Sunbeams were 1¼ per cent faster than the Alfa Romeos, and we are, therefore, justified in raising the speed index for the British car to 121.

From 1922 onwards there is little difficulty in establishing comparative average speeds, since first Monza and later Montlhery and the Nürburg Ring give us a means of directly comparing the performances of cars of different types and year of construction. The French Grand Prix of 1925 is a particularly interesting example. Sunbeams were practically unchanged from the previous year, but Alfa Romeo had found an additional 20 h.p. by careful detail development, whilst Delage attained perhaps the peak of 2-litre performance by adding a supercharger to their twelve-cylinder car. This design had already the advantage of some 20 per cent greater piston area than either Sunbeam or Alfa, and at Montlhery it proved itself the fastest car, the relative speeds being : Delage 100 ; Alfa Romeo 99.6 ; Sunbeam 94.8.

The very large speed differences between the French and Italian cars and Sunbeam is in harmony with a deficiency of some 50 b.h.p. and the margin between the Sunbeam and the Delage on this circuit brings us to an average speed index of 127.5 for the latter.

It is not uninteresting at this stage to insert a check upon the formula in which it was suggested that average speeds on a circuit varied (with road-racing cars of comparable types) as the square root of their maximum speeds. Conversely maxima should vary as the square of the lap speeds, and in the 2-litre class we have estimated these (relative to the 1906 Renault) to be : 1922 Fiat 111 ; 1923 Fiat 116 ; 1924 Alfa Romeo 120 ; 1924 Sunbeam 121 ; 1925 Delage 127.5.

We have a timed 123 m.p.h. for the 1924 Alfa Romeo, and giving a slight benefit to the Sunbeam, we can fix the speed of the latter at, say, 125 m.p.h. Using this as a datum we get, working backwards, maxima of 115 m.p.h. and 105 m.p.h. for the 1923 and 1922 Fiats and, forwards, 138 m.p.h. for the 2-litre Delage. The former figures agree very closely with the estimates that have been made ; the latter compares with 134 m.p.h. in record attempts (A.I.7., 5/9/26) That we should be able to use an empirical formula of this kind to cover a racing period of twenty years with such diverse types as the 1906 10-litre Renault and the 1925 2-litre Delage and to predict the maximum speed of the latter within an accuracy of 2¼ per cent is surely worth noting.

Perhaps even more remarkable is the accuracy with which one can predict the maximum speed of the Renault knowing (a) the maximum speed of the Delage and (b) the average speed indices of the two cars. The Renault index was established as 100 and the Delage 127.5 but the latter includes a 5 per cent allowance for front brakes. Eliminating this brings the index figure to 121 which in turn should be the equivalent of a 48 per cent increase in maximum speed, i.e., the Renault ought theoretically to have a maximum speed 32.5 per cent less than the Delage. This fraction deducted from 134 m.p.h. gives a figure of 90.5 m.p.h. which is less than the 2 per cent below the 92.2 m.p.h. actually recorded by the Renault when running in the 1906 Grand Prix.

Record attempts enable us to state precisely the relative performances of the best examples of 1925 and 1926-7 period, for we have figures relating to both the twelve-cylinder Delage and the eight-cylinder Talbot. The former have previously been quoted ; the latter achieved 81.55 m.p.h. for a standing kilometre, 92.33 m.p.h. for a standing mile, and 129.75 for a flying kilometre, from which we may deduce that the speed between the end of the kilometre and the mile averaged 120 m.p.h. (A.I. No. 10, 5/9/26).

There was little to choose between the all-round performance of the Talbot and Delage cars, and the square root formula derived from an average speed index of 127.5 for the 2-litre twelve-cylinder Delage, gives an estimate (based on maxima) of 125.5 for the 1½-litre models.

Direct comparisons can be made between lap speeds put up at Montlhery, Monza and San Sebastian but there are good reasons for ignoring published figures for the last-named circuit. In 1925 the twelve-cylinder Delage cars led the race throughout and on other circuits proved beyond question that they had superior speed to the unsupercharged Type 35 Bugattis. Nevertheless, at San Sebastian, the Bugatti put in a lap at 82.75 m.p.h., whereas the best recorded Delage figure was 81.5 m.p.h.-a fairly clear indication that the Delages were not pressed. Restricting our comparisons to the remaining two circuits, we can compare the 1924 Alfa Romeo lap of 104.24 m.p.h. at Monza with the 103.2 m.p.h. recorded by one of the Talbots when running in 1928. This gives a Talbot index of 125.5 which agrees exactly with the calculated figure.

In the French Grand Prix of 1927, at Montlhery, the Talbot attained an index of 127.8 by almost equalling the record lap put up by the 1925 2-litre Delage, whereas the 1½-litre Delage exceeded the speed of its predecessor by 1.8 per cent and must therefore be given an average speed index of 129.2. Owing to the absence of data it is impossible properly to assess the average speed capabilities of the double-six Fiat, but it was almost certainly faster than the Delage and rough justice will probably be accorded the three most powerful makes built under the 1½-litre formula by giving indices of 128, 129 and 130 to the Talbot, Delage and Fiat cars respectively. Putting the matter in another way, by reason of superior brakes, road holding and general control, these models beat calculated form by between 3 and 4 per cent, i.e., their improved chassis design gave results equal to a potential gain of 10 m.p.h. in top speed, so one may say that between 1925 and 1927 developments in road holding proved to be worth 40 h.p.

The Type 35 Bugatti was 7 per cent slower than the 1925 Delage in maximum speed and the calculated average speed index would, therefore, be 123, viz. 4½ per cent less than the Delage.

Between the Bugatti and the Talbot the difference is 4 per cent on maximum or an implied 2 per cent on the average speed index, but when these two cars met on level terms at Monza in 1928 the Bugatti was only a mere 0.5 per cent slower on lap speed, whilst on the San Sebastian circuit it was actually 4 per cent faster than the I½-litre, eight-cylinder, Delage, which for all practical purposes may be considered to have the same performance as the Talbot of corresponding capacity.

The relation between the 2.3-litre Bugatti and the 1925 2-litre cars is rather more difficult to establish. We can set up a table thus showing the speed relative to the P2 Alfa Romeo on three circuits. These are :

Monza	0.96 *per cent*	Bugatti deficiency
Montenero	4.0 *per cent*	
Trefontana	2.8 *per cent*	

We must, however, enter a *caveat.* The comparison at Monza is as between Alfa Romeo in 1924 and Bugatti in 1928, whereas the other two figures are based on Alfa Romeo performances in 1928-30, and in these years there is no doubt that the P2 was a good deal faster than it had been previously.

This is shown most clearly at Cremona. On its first appearance on this course in the early part of 1924 the P2 averaged 98.3 m.p.h. for the race ; in 1929 114.4 m.p.h. On the face of it it would appear that the Alfa average speed index rose from 121 to *circa* 140 in five years, but it is more likely that the car was not flat out in its maiden race in 1924. The maximum speed timed over ten kilometres increased from 123 m.p.h. to 138 m.p.h., which would lead one to expect that the index would rise from 121 to 131.6.

The 1930 Monza race gives a cross-check for on the short circuit used for this year the P2 Alfa proved itself 3 per cent faster than the eight-cylinder Talbot, and thus can claim a comparative average index of not less than 130.

Accepting, then, this figure for the fully developed P2 (developing 165 b.h.p.) we shall certainly not be far wrong if we place the Bugatti index at 127, that is four points above the figure predicted on the basis of known maximum speed.

These virtues kept the car in active competition with the higher powered models, of much more complicated engine design, built between 1924 and 1927, but in the 1930 Monza race the 2½-litre Maserati proved itself definitely the fastest road racing car built up to that time. The average circuit speed was no less than 7½ per cent faster than the Type 35C Bugatti, and even on the San Sebastian road course, perhaps a truer guide of relative merit, the Maserati was 3 per cent the faster car. On the Brooklands Mountain circuit the difference in speed between the two types was 72.6 m.p.h. and 78 m.p.h. and we are certainly justified in giving Maserati an average index of 133.

If the relation of average index to square root of the maximum speed were immutable the top speed of Maserati would have been 7 per cent more than the twelve-cylinder Delage or approximately 144 m.p.h. There are, unfortunately, no records to show the true maximum of the Italian car, but we can be certain that it was not so fast as this and we may doubt if it would reach 140 m.p.h.

In the next three years racing cars continued to be disproportionately faster round a circuit than they were on a straight line.

Chassis showed little visible change from 1929-30 but developments were continuous and figures for average speeds show clearly that these were worth up to a gain of over 5 m.p.h. in maximum.

The maximum speeds of the 1931 models were as one might expect, and the validity of the square root law is supported by the known facts. The 92 m.p.h. 1906 Renault had approximately 18 sq. ft. of frontal area and 90 b.h.p. ; the Type 51 Bugatti had a frontal area of some 11 sq. ft., and an engine output of some 160 b.h.p. Postulating that 5 b.h.p. per sq. ft. gives 92 m.p.h., 14.5 h.p. per sq. ft. gives a calculated maximum speed of 131 m.p.h. ; and the best timed figure for the Type 51 was actually 131.22 m.p.h. over the flying kilometre (10.3.32 AI No. 181).

Both the Monza Alfa Romeo and the Maserati had similar frontal areas but rather higher maximum power, the latter developing a claimed 175 b.h.p. equal to a theoretical maximum of about 136 m.p.h.

It will be recognised that this figure is less than that obtained on the 1925 Delage of 25 per cent lesser swept volume, but which had twelve cylinders compared to eight and a piston area of 38.7 sq. in. in place of 41.3 sq. in., a deficiency of 6 per cent, which was more than offset by the more ambitious layout. In consequence, the road racing cars built in 1932 were very little faster than the 1925 Delage flat out, and using square root law we are not entitled to expect that their average index would be more than 129. Direct comparison with previous cars over similar circuits proves that the real figures were much better than this.

From 1930 onwards there is a steady increase in the number of comparisons which can be made between different cars running over the same circuit and in order to exemplify the technique of establishing average indices the figures for the 1931/2 Type 51 Bugatti, the 1931 Monza Type Alfa and their immediate successors, viz. : the 1932 P3 Alfa Romeo Monoposto and 1933 2.9 Maserati, are set out in a table below. This shows average m.p.h., with average indices in parentheses, and where the latter have been established in data already quoted the figures are italicised.

EVIDENCE OF LAP SPEEDS 1925-33

	COURSE ; LAP SPEED (M.P.H.) ; AND AVERAGE INDEX.						
Make	*Spa*	*Montlhery*	*Pescara*	*Nürburg*	*San Sebastian*	*Monza*	*Rheims*
Alfa Romeo P2 1925	81.5 (126)					104.24 (126)	
Delage 1925		80.3 (127)					
Bugatti Type 35 1928-30				69.97 (127)	88.25 (127)		91 (*127*)
Maserati 2½ Litre 1930			78.3 (131)		91 (131)		
Monza Alfa 1931			83.4 (138)			105 (127)	
Type 51 Bugatti 1931-2	88 (136)			72.6 (132)			92.78 (129.5)
2.8 Maserati 1931		85.6 (135.5)					
P3 Alfa Romeo 1932-3				77.55 (141)		115.82 (140)	99.5 (139)
2.9-Litre Maserati 1933	92.33 (143)	86.6 (137)			96.59 (139)		

Note : *The Monza speed of the P2 Alfa Romeo was achieved in late 1924 and the average index has been correlated not with prior performances in 1924 but with subsequent speeds in 1925.*

On the mean of the above we can award average indices as follows :

1931-2 Type 51 Bugatti -132.5
1931 Monza Type Alfa -132.5
1931 Maserati -135.5
1932/3 P3 Alfa Romeo -140
1933 2.9-litre Maserati -139.9

The figure for the 2.8 Maserati is based on its performance on one circuit only, and may be something of an exaggeration, but this car beat both the Monza Alfa and the Type 51 Bugatti in the 1931 Monza Grand Prix and its margin of speed over the whole race was 1.35 per cent higher than the Alfa Romeo, which compares reasonably with the lap speed index margin of 2¼ per cent.

The lap speeds achieved by the Type 51 Bugatti and the Monza Alfa Romeo (where the average indices are supported by ample consistent data on road racing circuits) presuppose a maximum speed 58 per cent higher than the 1906 Renault, i.e. 146 m.p.h., after making due allowance for front brakes. This is 10 per cent more than they reached in fact.

In the succeeding cars, that is to say the P3 Alfa Romeo and 2.9-litre Maserati maximum recorded speeds again agree closely with expectations based on the power available, but the gap between them and the top speeds indicated by performances on a lap has grown even wider.

On the basis of h.p. per sq. ft. of frontal area one would expect the P3 Alfa Romeo to have a maximum of 143 m.p.h. and this must be very nearly a true figure since the car had a normal gearing giving 140 m.p.h. at the peak of the power curve. On the assumption that maximum speeds vary as the square of the average index we should, however, expect a top speed of 162 m.p.h. using the 1906 Renault as a datum, or 152 m.p.h. using the Type 35 Bugatti as a starting point. In other words, in 1930 the Bugatti was beating the " square law " by a margin ; in 1932-3 the P3 Alfa Romeo beat it by an even bigger margin which can be reckoned as 6 per cent, or 11 per cent compared with the rear-braked Renault.

We now come to one of the outstanding paradoxes in the technical history of automobile racing. Between 1928 and 1933 we have seen a steady and indeed substantial growth in average speeds with but small changes in maxima and with very little visible signs of change in design. In 1934 racing car performance factors were subject to a violent upheaval as engine outputs were raised by 50 per cent or more, maximum speed increased by over 20 m.p.h., weight if anything reduced. Simultaneously came the introduction of independent suspension for each wheel on the German cars.

The very large increase in performance factors coupled with the acknowledged merits of independent wheel suspension would lead one to expect a very considerable gain in the average speed index for 1934.

Taking first the orthodox Alfa Romeo which had a 1933 index figure of 140, one might expect the additional power to raise this to 142.5 and on similar theoretical reasoning that the German cars would lap sufficiently fast to justify an index figure of 154. A study of the lap speeds set out in Volume I demonstrates that the Alfa Romeos ran very close to form ; for using the same method of assessment as was disclosed in detail in the preceding table the Alfa Romeo P3 Type B index for 1934 comes to 143.5. The Type 59 Bugatti proved slightly faster than the Alfa Romeo and its speed in the Belgian, Swiss, and Spanish Grands Prix brings us to an average index of 144.5.

There are no facts which give us directly the maximum speeds of any of the 1934 racing cars for although some speeds based on times taken over a kilometre at Pescara were published, these are so palpably optimistic that one must reject them either on the grounds of error in measurement or by reason of some very special circumstances.

Assessing the road performance of the German cars is also far from easy for they took some time to settle down and discover correct tyre pressures, shock absorber settings, etc. Hence in the early races they showed only little or no superiority in performance over the more conventional and far slower models, and on figures for Montlhery and Nürburg achieved in June the German cars have an average index of no more than 145. In the later races such as at Monza and San Sebastian in September they achieved superiority over their rivals, bringing the index figure to 150. The details are worth setting out :

Lap time comparison 1934 Grand Prix cars

Circuit	*Car*	*Lap Time*	*Relative speed*	
Montlhery	Alfa Romeo	5mins. 6 secs.	100	June
	Mercedes-Benz	5 .. 6.3 ..	99.9	
Nürburg	Auto Union	10 .. 44 ..	100	
	Alfa Romeo	10 .. 56 ..	98	
Monza	Auto Union	2 .. 13.6 ..	100	Sept.
	Mercedes-Benz	2 .. 16 ..	97	
	Alfa Romeo	2 .. 19.2 ..	93	
San Sebastian ..	Auto Union	6 .. 20 ..	100	
	Bugatti	6 .. 27 ..	98	

The highest average index which can be given to the German cars was 152 for Auto Union and 148 for Mercedes-Benz (both at Monza). This is of particular interest for it shows that independent suspension did not bring any direct benefit although it undoubtedly gave advantages in respect of stability at speed and improved acceleration away from corners. It seems likely, however, that the conventional sprung Alfa Romeos and Bugattis circumnavigated sharp radius corners faster than their independently sprung rivals, and this supposition is confirmed by some most interesting times taken by Faroux at Monza and published in his paper *l'Auto*. At the Italian Grand Prix he observed a kilometre equally divided by approach to, and departure from, the apex of a hairpin corner and the times taken (converted to average m.p.h.) were :–

Times and Speeds over 1 km. at Monza, 1934

Car	*Braking Time and average speed 500 Metres*	*Accelerating Time and speed average 500 Metres*	*Total time and average speed over 1.0 km. with hairpin corner*
Auto Union	12.4 secs. 90 m.p.h.	14.4 secs. 77.5 m.p.h.	26.8 secs. 83.5 m.p.h.
Mercedes-Benz	12.6 secs. 88.5 m.p.h.	14.8 secs. 75.5 m.p.h.	27.4 secs. 81.5 m.p.h.
Alfa Romeo	12.0 secs. 93 m.p.h.	15.6 secs. 71.6 m.p.h.	27.6 secs. 81.0 m.p.h.

In round figures Alfa Romeo averaged 6 m.p.h. less than the Auto Union and 4 m.p.h. less than the Mercedes-Benz, over the 500 metres away from the corner, but over the entire kilometre was only 2.5 and 0.5 m.p.h. slower than its more powerful rivals. It is improbable that the brakes of the Alfa Romeo were the most effective of the three cars and a simpler and more likely explanation is that the P3 took the corner at the highest speed.

Although the 1935 Alfa Romeo was a faster and more powerful car than the 1934 model it remained basically inferior to the German cars with an anticipated maxima of about 155 m.p.h. compared with about 180 m.p.h. Correspondingly, one would expect that with a 10 m.p.h. gain in speed over the 1934 model (7 per cent) the lap index would rise by 35 per cent to 149. That is to say, one would expect a 1935 Alfa Romeo to put up about the same lap speeds as the 1934 Mercedes-Benz and Auto Unions. This proved to be so on the Nürburg Ring for, in winning the Gerrnan Grand Prix, Nuvolari lapped at 79.3 m.p.h. which can be considered identical with the speed put up in the previous year's event by the Auto Unions.

In both the French and Italian Grands Prix, run over circuits with artificial corners, Alfa Romeo proved faster than either of the German cars but the latter asserted their superiority on 100 m.p.h. circuits such as Spa and San Sebastian.

Mercedes-Benz put in a lap giving a comparative average index of 157 on the former circuit and Auto Union equalled this figure on the latter, but making a comparison of all the courses on which the cars can be fairly compared the index figure is 153 for both cars. Thus in 1935, as in 1934, the German cars failed to reach the figures which might be theoretically expected from them, viz. : between 158 and 160. Alfa Romeo, on the other hand, were as fast or perhaps faster than one might expect in view of their more moderate maximum speed.

One concludes that the Italian car made full use of all the power available but that chassis design had not yet progressed sufficiently far to enable the full reward of 400 b.h.p. to be reached in road racing. In particular, both Mercedes-Benz and Auto Union were hard to handle on short-radius curves which led the team drivers of the former to ask for a shorter wheelbase car. The Auto Union presented special handling problems of its own, for the drivers were placed very far forward and were thus in a difficult position to sense the beginnings of a back-wheel skid. Moreover, the use of swing axle with high roll centre and stiff rear springs produced cars which were inherent oversteerers and this, coupled with the great power under the bonnet, imposed a degree of discretion on the drivers which must have adversely affected lap speeds.

These facts should not blind us to the practical reality that the German cars had raised lap speed averages by some 10 per cent in two years whereas in the ten racing years 1924-33 the lap speed index had risen from 127 to 140, an average increment of 1 per cent per annum. Hence under the 750 kg. formula ten years of normal average gain were telescoped into two, and one has only to compare the 450 b.h.p., 175 m.p.h., vehicles of 1935 with the 180 b.h.p., 135 m.p.h., cars built only three years previously to realise that the racing car design had undergone complete metamorphosis.

In 1936, the 1935 cars themselves were made to seem under-powered vehicles, with moderate average speeds, despite the fact that the most successful model of the year, the C Type Auto Union, was no easy car to drive owing to the steering effects caused by the swing axle system, and by the enormously large and heavy tyres essential to ensure a life of over 150 miles before a pit stop was necessary for their renewal.

These defects were minimised by the comparatively hard suspension with friction damping, but nevertheless with the great increase in power the C Type car not only won a very large number of races, but also set up entirely new standards of average speed. On the Nürburg Ring, for instance, the C Type was used unchanged in design for two years and in 1936 it proved to be 4½ per cent faster than the B Type at Berne and 8 per cent faster than the A Type at Nürburg. In 1937 it was faster still.

On the basis of circuit speed varying with the sixth root of the h.p. per sq. ft., we should expect the C Type to be 10 per cent faster than the A Type and 6 per cent fasterthan the B Type, and during 1937 it did, in fact, prove exactly 6 per cent faster than the B Type on the Berne circuit, and (taking into account a remarkable practice lap) 10.5 per cent faster than the A Type on the Nürburg Ring. Using these percentage improvement figures we get an average index of 161 using a 1934 A Type as a datum, or 162.5 using the B Type 1935 model as a datum.

Compared with other known performances at Spa and Brno the C Type returned an index figure of 163 in 1937 and we may reasonably accept 162 as a fair figure of merit for this design. Taking into account the 11 per cent correction factors already touched upon we would thus expect the Auto Union to be faster than the 1906 Renault in the proportion of 2.1 : 1 equal to a maximum speed of 189 m.p.h. On the Pescara circuit two of these cars were timed at 183 m.p.h. and on the normal gearing used for road races the peak of the h.p. curve was reached at 185 m.p.h. The divergence between theory and practice is, therefore, less than 2 per cent, and whereas the 1934-5 cars had failed by an appreciable margin to reach the circuit speeds which might be expected from them, the 1937 C Type entirely lived up to expectations, at least when it was driven by the gifted Rosemeyer.

The 1937 Auto Union performance was far ahead of anything that could be achieved by Alfa Romeo, who continued with their twelve-cylinder engine in the all-independently sprung 1936 chassis. This proved to be 4 per cent slower than the C Type Auto Union in practice on the Nürburg Ring and 5 per cent slower in practice on the Leghorn circuit. Even the introduction of a new chassis with a much lower centre of gravity failed to bring Alfa Romeo into the picture during the 1937 racing, and during the whole of the year they failed to get into the first three positions.

The average speed index of the 1937 Italian cars was, in fact, about 155 (compared to a 1936 figure which can be established at about 152), but an advance of this order was quite inadequate to deal with the Auto Union C Type, and even more hopeless as competition with the Mercedes-Benz Type W125.

This car had the highest performance factors of any yet constructed, and the 646 h.p. developed by the engine is by far the greatest which any designer has asked his team drivers to control on a road racing circuit. The Auto Union, although not hopelessly outclassed, was definitely inferior during this year, the mean advantage of the Mercedes-Benz being 1.4 per cent (giving it an overall figure of 163.4) and the relative lap speeds being as shown in the following table.

BEST LAP SPEEDS C TYPE AUTO UNION AND MERCEDES-BENZ TYPE WI25 CARS

	Auto Union C Type	Mercedes-Benz W125
Spa	107.7 m.p.h.	109.9 m.p.h.
Nürburg	87 ,,	86.2 ,,
Berne	106.8 ,,	107.14 ,,
Brno	92.8 ,,	94.89 ,,

In 1938 the regulations excluded the 600 h.p. " monsters " which had developed during the years of the 750 kg. rating and led to cars with 3-litre supercharged engines. These used more fuel than their predecessors and hence left the starting line not only with less power but also weighing more.

In the first year of the new formula the Auto Union D Type suffered a series of misfortunes and the twelve-cylinder Mercedes-Benz Type W154 was beyond doubt the fastest of the year.

Although handicapped in acceleration and maximum speed factors the W154 fractionally improved on the lap speed of its predecessor on the Berne and Leghorn circuits. At Nürburg and Donington the 1938 3-litre cars were slower by 1.9 and 0.15 per cent respectively. Comparative figures on the Rheims circuit used for the French. Grand Prix can only be made with the P3 Alfa Romeos of 1932 and 1935, and these give an index figure of approximately 155. It should, however, be noted that this was the first major race of the season and that Mercedes-Benz had no serious opposition, so it is likely that this speed underrates the true capacity of the model, which in the face of other performances, merits an index figure of at least 160 and an anticipated maximum speed of 188 m.p.h. As can be seen from the specification table reproduced in Example No. 17 (Volume I) this was the figure obtained at 7,500 r.p.m. on the gear ratios used at Nürburg, although a basis of speed varying as the cube root of power per sq. ft. of frontal area the predicted maximum of the Type 154 would be only 180 m.p.h. Thus both in comparison with the higher power of the 1937 car, and absolutely, the Type 154 was substantially faster round a circuit, and flat out, than one might theoretically expect.

Performance factors for the 1939 Auto Unions were 405 b.h.p. per laden ton and 42.2 b.h.p. per sq. ft. of frontal area ; the Mercedes-Benz W163 disposed of 405 b.h.p. per laden ton and 39 b.h.p. per sq. ft. In theory, therefore, the rear-engined car should have secured a slight advantage in circuit performance ; in fact it failed to do so, as shown below :

BEST 1939 LAP SPEEDS D TYPE AUTO UNION AND W163 MERCEDES-BENZ

	Auto Union	Mercedes-Benz
Nürburg	84.7 m.p.h.	87.5 m.p.h.
Rheims	116.6 m.p.h.	117.5 m.p.h.
Berne	103.3 m.p.h.	106.23 m.p.h.

These figures give a mean superiority to Mercedes-Benz of 2.3 per cent.

In assessing the absolute performance of the W163 we find that it was 1.5 per cent faster on the Nürburg Ring and 0.45 per cent slower at Berne. We have previously established an average index figure of 163.4 for the W125, and on the Rheims circuit the best practice lap gives the 1939 Mercedes-Benz an index of 166, using the P3 Alfa Romeo as a datum. Although this is high in relation to performance at Spa and Berne it agrees almost exactly with the average ascertained by comparison with the W125 on the Nürburg Ring.

Giving full weight to this identity of evidence provided by lap speed on a very difficult and comparatively slow course, confirmed by the average on an extremely fast open course, we may fairly award the W163 an index of 165. The 1939 3-litre V12 two-stage boost Mercedes-Benz may, therefore, claim to be the proved fastest road-racing vehicle to be built in the period reviewed by this book, a matter of considerable technical interest in that the basic performance factors of this car were considerably lower than those of the 1937 models. This apparent anomaly can be accounted for, but to do so involves an analysis of quantities and qualities which will be more appropriately dealt with in the chapter dealing with overall trends in design between 1930 and 1939 in Part IV.

During 1938 and 1939 many responsible people advocated the replacement of the existing Formula (3 litres supercharged, 4½ litres unsupercharged) by a 1½-litre limit. The traditional reasons were advanced for such a change ; that is, it was represented that the existing cars were too fast for most drivers ; that they were excessively costly to build and operate ; and that competition was confined to two makes of only one nationality.

In 1946 such arguments had become irrelevant and the establishment of a 1½-litre category for Grand Prix racing was determined as much by *force majeure* as by reason or logic. None of the pre-war 3-litre cars were available for racing, with the exception of the Alfa Romeo models, and as it had clearly been established in the pre-war years that the 4½-litre cars were no match for blown 3-litres, the proposal to give them a new lease of life by enabling them to compete against 1½-litre supercharged types was quite an appropriate one.

The introduction of this new limit for 1947 and, as originally planned, for the ensuing four years, made certain that average circuit speeds would fall. The extent of the drop could be estimated both inductively and deductively.

Taking the first method and arguing from the particular to the general, it was possible immediately to write down the performances put up by various cars eligible for the new Formula on certain European circuits in 1938 and 1939, and also to compare the speeds achieved thereon both with the immediate pre-war and earlier Grand Prix types. By making this comparison on three differing circuits, i.e. Livorno (or Leghorn), which had a rather slow lap, Rheims, representing the highest speed achieved in Europe, and Berne as an intermediate course, we can set out a table as follows :

M.P.H. SPEEDS OF 1½-LITRE SUPERCHARGED AND 4½-LITRE U/S CARS ON THREE EUROPEAN CIRCUITS (including practice)

Make and Type	*Berne*	*Rheims*	*Leghorn*
1939 Alfa Romeo	98.8	–	90.8
1937/8 E.R.A. C Type	91.4	101.6	–

Make and Type	*Berne*	*Rheims*	*Leghorn*
1939 E.R.A. E Type	—	101.6	—
Maserati 4 CL	97.0	99.6	—
Talbot 4-litre	—	105.8	—
Delahaye 4½-litre	—	100.3	—
1938 Mercedes-Benz	107.5	109.6	91.2
1939 Mercedes-Benz	106.4	117.5	—

From these figures we can infer that in 1939 the Alfa Romeo Type 158 was the fastest car of Formula I type and also that on a comparatively slow course, such as Leghorn, Charles Faroux was justified in putting up as a headline : " Les 1.500 allèrent presque aussi vite que les bolides ...". Nevertheless, " Les 1.500 " were considerably slower at Berne and not, so to speak, in the same street at Rheims. Using these three circuits as a base we may arrive at lap speed index figures as follows :

Mercedes-Benz Type W. 163	In 1939 Form	165
Alfa Romeo Type 158		150
Talbot 4-litre		148.6
Maserati 4 CL		145.2
E.R.A. E Type		142
E.R.A. C Type		142
Delahaye 4½-litre		141

In the case of the Alfa Romeo allowance has been made in the above table for the fact that it did not run at Rheims. The E Type E.R.A. is probably underrated as this was its first public appearance, and the circuit at Rheims manifestly favours the cars with the highest maxima.

Generally speaking, however, it will be seen that on the basis of past results one could expect the 1947 cars to have a lap speed index lying between 145 and 150. They would thus be between 10 and 15 per cent slower than their predecessors and the fastest of them would have performances equivalent to those achieved by Mercedes-Benz and Auto Union in 1934. The slower cars would be equivalent in speed to the 1932 P.3 Alfa Romeo.

A deductive estimate of speed could have been made on the basis of power per sq. ft. of frontal area. The higher-powered 1½-litre engines of 1939 were developing about 230 h.p. and although the drivers were mounted centrally above a central propeller shaft it is fair to assume that the cars had a frontal area of *circa* 11 sq. ft. This being so, they would have 21 h.p./sq. ft. of frontal area, the reduction of this factor being therefore nearly 48 per cent as compared with an abatement of total engine power of 52 per cent. The consequence of such a reduction would normally be a fall in the maximum road speed of the order of 20 per cent (i.e. from about 195 m.p.h. to 155 m.p.h.), and one might reasonably expect that this in turn would lead to an 11 per cent.reduction in lap speed corresponding to a Py (or lap speed index) figure of 147.

The 4½-litre cars were developing some 200 h.p. and with a frontal area of 12½ sq. ft. the h.p./sq. ft. was 16 - a reduction of 60 per cent compared to pre-war performances. From this one might have deduced a fall in maximum speed of about 26 per cent and a reduction in average lap speeds of about 14 per cent, giving a Py index of 142.

It will be seen that whether argued from past practice, or on purely theoretical grounds, a reduction in highest recorded lap speeds of around 10 per cent and a reversion to 1934 performances could reasonably have been anticipated.

Immediately after the war Alfa Romeo raised the output of the Type 158 to 254 b.h.p. and to continue the deductive theoretical argument this should have led to a circuit index of 151. Turning from evidence to fact, the Spa circuit was lapped in 1935 at 103.7 m.p.h. by a 4-litre Mercedes-Benz with a Py figure of 150 and in 1946 by a Type 158 Alfa Romeo at 104.4 m.p.h.

In 1947, the first year of Formula I racing, it was hard to make accurate comparisons with pre-war figures. Alfa Romeo so clearly mastered the situation in Switzerland that they found it unnecessary even to equal their pre-war lap speed ; as the Grand Prix de l'A.C.F. was at Lyons they did not choose to run at Rheims ; and in the Marne Grand Prix held over the Rheims circuit a Type 4 CL Maserati improved very slightly upon the pre-war performance of this model.

During 1948, new cars, such as the 4½-litre Talbot, the 1½-litre Ferrari and the 4 CLT or San Remo Maserati, came into the picture, and the two-stage Type 158 Alfa Romeo was even further developed. Additionally, racing drivers themselves were able to polish off the rust spots which had corroded their technique during the retirement enforced by the war. By the end of 1949 the general performance of the Formula I cars had become sufficiently established to make possible a detailed analysis of their performance in comparison with pre-war types,

In relation to the 1939 cars the Alfa Romeo Type 158 could be evaluated at Spa, Berne and Rheims ; the 4 CLT Maserati at Spa and Monaco ; and the single-stage Ferrari at Berne and Rheims. Further, the Ferrari itself could be assessed in relation to the 4 CLT Maserati at Lausanne, Silverstone and Zandvoort ; the Maserati with the E Type E.R.A. at Jersey, Silverstone and Goodwood ; and the 4½-litre Talbot to one of the types aforementioned at Monza, Silverstone, Lausanne and Brno. The two-stage Ferrari was represented by a single appearance at Monza. Computations so based on the best performances in the first three years of Formula I racing give results which may be tabulated :

AVERAGE SPEED 1947-9 RACING CARS, cf. 1938-9 3-litre MERCEDES-BENZ

Make and Type		*Relative average speed*
Mercedes-Benz 3-litre		100
Alfa Romeo Type 158 two-stage	1949	94.2
Ferrari two-stage	1949	93.0
Alfa Romeo Type 158 one-stage	1947	91.2
Maserati San Remo two-stage	1949	91.2
Ferrari single-stage	1948	89.0
E.R.A. two-stage E Type	1948	88.5
Talbot 4½-litre U/S	1949	86.5

Bearing in mind that before Formula I commenced the outlook was that speeds would recede to the line held by the 1935 cars, it may further be interesting to set out the relationship between the immediate pre-war and immediate post-war models in a further table, thus :

COMPARISON OF AVERAGE SPEED INDICES OF 1947-9 AND PRE-WAR CARS

Relative to 1906 Renault

Year	*Make and Type*	*Py Factor*
1939	3-litre Mercedes-Benz	165.0
1937	5.6-litre Mercedes-Benz	163.4
1939	3-litre Auto Union	162.5
1937	6-litre Auto Union	162.0
1936	6-litre Auto Union	158.0
1948	1.5-litre Alfa Romeo two-stage	155.7
1937	3.8-litre Alfa Romeo	155.0
1949	1.5-litre Ferrari two-stage	154.0
1935	4-litre Mercedes-Benz	153.0
1947	1.5-litre Alfa Romeo single-stage	150.0
1949	1.5-litre Maserati two-stage	150.5
1934	4.95-litre Auto Union	150.0
1949	1.5-litre Ferrari single-stage	147.0
1949	4.5-litre Talbot U/S	143.0
1932	2.65-litre P.3 Alfa Romeo	140.0

Continuing, it is possible to interpret these figures as the handicaps which would be needed on a circuit such as Rheims, and this can be directly compared with a similar estimate for the leading pre-war cars made in Chapter XXXI.

HANDICAP FOR 500 km. RACE ON 1939 4.85-mile RHEIMS CIRCUIT

Year	*Make and Type*	*Starting Allowance*
1939	3-litre Mercedes-Benz	Scratch
1949	1.5-litre two-stage Alfa Romeo	9 min. 30 sec.
1947	1.5-litre Alfa Romeo single-stage	16 min.
1949	1.5-litre Maserati two-stage	16 min.
1949	1.5-litre Ferrari single-stage	19 min. 30 sec.
1949	4.5-litre Talbot U/S	24 min. 30 sec.

As it happens, the high boost two-stage Type 158 Alfa Romeo, on which the above calculations were based, did not actually run in the Grand Prix de l'A.C.F. held at Rheims in 1949, but the somewhat lower powered two-stage model took 14 minutes longer than the winning 1939 Auto Union would have done if the race had been held over the same distance.

As shown in the tables above, between 1947 and 1949 Alfa Romeo raised their lap speed index by about 2 per cent per annum of Formula I racing, and after retiring for a year they reappeared in 1950 with an improvement of the same order. This can be checked in two ways. Reference to the performances of the 1948 Alfa Romeo itself at Berne, Monza and Rheims brings a Py factor of 158.03 and reference to the 1937-9 Mercedes-Benz speeds at Beme, Monaco and Rheims gives an index of 158.8. A final figure of 158.4 for the Alfa Romeo makes it possible to set out a comprehensive lap speed table for the other 1950 cars and this shows that the 4½-litre Ferrari became immediately a formidable rival with a Py of 158.2.

As there are limited possibilities in the development of an unsupercharged engine, and as the Type 158 had by 1950 been run through seven racing seasons, there was no reason to suppose that the 1951 speeds of Ferrari and Alfa Romeo would show any great increment over those of the previous years. The fact is, however, that Alfa Romeo were able to make the very considerable advance of 3.7 per cent and Ferrari of 3.2 per cent taken over the whole of the year's racing. A substantial change in the Spa circuit ruled out any comparison with 1939 vehicles thereon, but the 1951 models were appreciably faster than the 1939 types at Rheims and the Nürburg Ring, and only slightly slower at Berne, on which last circuit comparisons over the full race distance were vitiated by exceedingly bad weather.

The hypothetical margin of superiority of an Alfa Romeo Type 159 over the 1939 Auto Union at Rheims would amount to 9 minutes in a 500 km. race. It is equally interesting to compare the performances of the Ferrari with the pre-war German cars on the Nürburg Ring. The fastest race on the latter circuit over the full distance of 500 km. was 82.77 m.p.h. by Caracciola on the 1937 Mercedes-Benz, equal to a total elapsed time of 3 hours 46 minutes. Over the same distance the 1951 Ferrari would have taken but 3 hours 44 minutes. Putting the matter in another way, if the German and French Grands Prix of 1951 had been run on *formules libres* over 500 km. the Alfa Romeo would have led a 3-litre Auto Union over the line at Rheims by the substantial margin of 164 miles (nearly 34 laps) and the Ferrari equally would have led the 1937 Mercedes-Benz over the line at the Nürburg Ring by some 2¾ miles.

The complete evidence of lap speed indices for all the major contenders in 1951 Formula I events is again set out in tabular form, and it should be remarked that the figures based on individual laps give results at times at variance with those taken over complete races. The reason is that the speeds for the latter depend not only upon whether the fastest combination of car and man covered full distance, but also upon the degree of competition experienced during the last few laps.

Enough has, however, been said to show that whereas the Formula I cars started their careers with an estimated deficit in speed of 10 per cent compared with the pre-war types, they were for practical purposes equally as fast after five racing seasons. The degree of improvement was unequal in that a steady advance of two per cent per annum (the standard rate during the whole history of Grand Prix racing) was almost doubled during 1951.

It is very difficult to assess with accuracy the development in average speed of the Formula I cars in the years 1952 and 1953. They were not run over the classic courses and all we can say from the short distance events staged in 1952 is that the B.R.M. was 0.5 per cent faster on a lap than the works Ferrari. It is fair to assume that the 1952 version of the latter car was slightly faster than the 1951 model (Py factor 163.2) and we must therefore give the B.R.M. a figure of at least 164.

The evidence in 1953 was even more tenuous and it is particularly difficult to interpret in the case of the B.R.M., which is obviously far more suited to really fast courses than it is to circuits with many corners. At Albi, for instance, the B.R.M. lapped at 115.57 m.p.h. which compares with the 106.63 put up by Fangio on a 1950

Maserati. Using the latter car as a datum we have a figure of 161 for the B.R.M., whereas if we use the Talbot speeds on the same circuit as a comparison we get a figure of 169. A fair but empiric figure would seem to be 165 on a fast course and 160 on a slow one. The Ferrari, as represented by the Thin-Wall Special, proved on the whole to be a slightly faster car and may have merited an index figure in excess of 165. To sum up, the Formula I cars running in minor events in 1953 were almost certainly as fast as, and possibly faster than, the 1939 Grand Prix cars. They thus have a claim to be called possibly the fastest road racing cars the world has yet seen.

It was a reasonable anticipation that the acceptance of Formula II as the limit for Grand Prix races in 1952 would result in a substantial reduction in lap and race speeds. The anticipated drop in the case of a car like the Ferrari, in which a 2-litre *circa* 200 h.p. engine replaced a 4½-litre approximately 400 h.p. power unit in the same chassis, was of the order of 74 per cent, but the reduction in fact was rather less than this. A comparison between these similar cars over identical circuits gives us :

AVERAGE SPEED (m.p.h.) 1952 FORMULA II FERRARI COMPARED WITH 1951 FORMULA I FERRARI

Car	*Nürburg Ring*	*Rheims*	*Monza*	*Spa*	*Berne*	*Average*
1951 Formula I Ferrari ..	85:69	117.95	122.5	117.4	102.2	109.148
1952 Formula II Ferrari ..	84.4	110.04	122.04	114.83	97.19	103.6

It will be seen that the difference was 5 per cent, but as one might expect, this average for the year contains within itself considerable fluctuations. For example, on the Nürburg Ring the drop in speed was under 2 per cent, whereas at Monza it was as much as 8 per cent. This shows that the Formula II cars suffered particularly where sheer lack of engine power prevented them from working up to comparable maximum speeds. Although somewhat outside the strict frame of reference of this chapter, it is relevant to point out that owing to the lower fuel and power consumption of the Formula II cars there was far less difference in their overall race times than might be supposed from the difference in lap speeds. This can be seen by comparing the times in 1952 with those put up in 1951 on the Nürburg Ring representing a slow course, and on Monza as an indication of a very fast course. These figures are :

OVERALL RACE TIMES FOR 20 LAPS ON NÜRBURG RING (283 miles)

Ascari (4½-litre Ferrari)	3 hr. 23 min. 3.3 sec.
Fangio (1.5-litre Alfa Romeo)	3 hr. 23 min. 33.8 sec.
Ascari (Formula II Ferrari)	3 hr. 26 min. 55 sec.

OVERALL RACE TIMES FOR 80 LAPS ON MONZA (312 miles)

Ascari (4½-litre Ferrari)	2 hr. 42 min. 39.2 sec.
Ascari (Formula II Ferrari)	2 hr. 50 min. 35.6 sec.

The Formula II Ferrari can be evaluated with both the preceding Formula I models and competitive Formula II designs on unchanged circuits such as the Nürburg Ring, Monza, Spa and Berne, and on the slightly changed circuit of Silverstone. It can also be compared with other Formula II models at Rouen and Zandvoort, and taking the overall picture we can set out the indices for the 1952 cars as :

MEAN INDEX LAP SPEEDS OF 1952 FORMULA II CARS

Ferrari	155
Maserati	153.6
Gordini	152
Connaught	148.5
E.R.A. Type G	146.5
Cooper	145
H.W.M.	144.2

In 1953, the 1952 lap speeds were in every case exceeded, although we must ignore the times put up at Rheims owing to the substantial change made in the nature of the circuit. The figures tabulated show that in 1953, as in 1952, Maserati and Ferrari achieved an approximate equality, with Gordini building the third fastest, and Connaught the fourth fastest, Formula II models. The mean index of the Ferrari is similar to that built up for the 1950 Alfa Romeo and as these figures are for the moment the endpoint in a study stretching over fifty years it may be of interest to compare these two cars circuit by circuit, and to put in parentheses the theoretical speed which would have been achieved by the 1906 Renault running on the same course.

RELATIVE RECORDED LAP SPEEDS FOR 1950 ALFA ROMEO FORMULA I CAR AND 1953 FERRARI FORMULA II CAR WITH THEORETICAL SPEED OF 1906 GRAND PRIX RENAULT

Car	*Silverstone*	*Monza*	*Berne*
1950 Alfa Romeo Formula I	98.2	118.83	100.47
1953 Ferrari Formula II	97.57	114.86	101.72
1906 Renault Grand Prix car	(61.8)	(72.6)	(64.4)

Finally one may estimate that if the 1939 Mercedes-Benz, 1953 Ferrari " Thin-Wall ", and 1953 B.R.M. had been running on the 1906 Le Mans circuit (which was the triangle Le Mans ; St. Calais ; La Ferté Bernard ; and then on the Paris-Le Mans Road) they would certainly have lapped at 120 m.p.h., and in view of the long straights, perhaps as fast as 130 m.p.h.

BEST RECORDED LAP SPEEDS AND MEAN AVERAGE SPEED INDEX FOR FORMULA I RACING CARS

Car	*Nürburg Ring*	*Good-wood***	*Spa*	*Monaco*	*Silver-stone*	*Zand-voort*	*Rheims*	*Monza*	*Jersey*	*Geneva*	*Barce-lona*	*Berne*	*Mean Index*
Alfa Romeo 158/9	85.69	97.36*	120.51	64.56* (158.4)	99.8	—	119.99	124.53	—	83.7* (158.4)	104.46	104.46	164.4
Ferrari 4.5-litre	85.69	95.2*	117.4	—	100.65	—	117.95	122.5	—	82.2	108.1	102.2	163.2
Ferrari 1.5-litre 2-stage	—	—	110	63.4	—	—	—	—	—	—	—	98	154.4
Ferrari 3.3-litre	—	—	108.9	—	—	—	—	—	—	—	—	—	150.7
Lago Talbot	—	—	110	62.4	92.85	83.9	110.2	108.6	—	79.2	92.2	95.2	150.0
Maserati 2-stage	—	89.26*	—	62.6	92.3	83	105	108.3	94.43	74.5	94.8	98	148.6
Ferrari 1.5-litre 1-stage	—	—	—	—	91.2	81.6	—	104.2	94.2	—	—	—	144.9
E.R.A. B type	—	85.38*	—	—	92.85	—	—	104.3	92.6	—	—	—	143.8
B.R.M.	—	88.7*	—	—	94.5	—	—	120.4	—	—	94.9	—	154.6
Simca Gordini 1.5-litre 1-stage	82.30	—	—	58.2	—	—	103.8	110.3	—	—	92.2	—	149.3

* 1950 models. ** Old course without *chicane.*

BEST RECORDED LAP SPEEDS AND MEAN AVERAGE SPEED INDEX FOR 1953 RACING CARS

Car	*Nürburg Ring*	*Silverstone*	*Albi*	*Rheims**	*Monza*	*Spa*	*Berne*	*Mean Index*
Maserati	84.6	96.67	—	115.9	114.76	117.3	101.72	158
Ferrari	85.62	97.57	—	115.9	114.86	115.5	101.4	158
Gordini	82.2	94.08	107.2	112.9	112.0	112.0	99.4	153
Connaught	77.6	94.08	106.4	110.4	110.1	(98.8)**	—	150.6
Cooper Alta	79.2	—	—	108.1	111.2	—	—	148.13
Cooper Bristol	76.38	94.08	100.0	107.2	108.4	—	95.0	146.9
H.W.M.	—	90.84	—	105.3	102.1	109.5	92	145.2

* Shortened, faster circuit used first in 1953. ** Ignored ; no " works " drivers.

Part Four

ANALYSIS AND SYNTHESIS

> *" The knowing more to-day than we knew yesterday ; the understanding what before seemed obscure and puzzling ; the contemplation of general truths, and the comparing together of different things–is an agreeable occupation of the mind : and, beside the present enjoyment, elevates the faculties above low pursuits, purifies and refines the passions, and helps our reason to assuage their violence."*
>
> HENRY, 1ST EARL OF BROUGHAM AND VAUX.

> *" Faced by the mountainous heap of the minutia of knowledge and awed by the watchful severity of his colleagues the modern historian too often takes refuge in learned articles or narrowly specialised dissertations, small fortresses that are easy to defend from attack. His work can be of the highest value ; but it is not an end in itself. I believe that the supreme duty of the historian is to write history, that is to say, to attempt to record in one sweeping sequence the greater events and movements . . . The writer, rash enough to make the attempt should not be criticised for his ambition however much he may deserve censure for the inadequacy of his equipment or the inanity of his results. . . "*
>
> STEVEN RUNCIMAN.

CHAPTER SEVEN

Bases of Comparison

FACTORS of performance fall into two broad divisions, one relating to a car as an entity, the other solely with engine design. But overall average speed on a circuit, the final criterion of racing car success, is dependent upon four principal factors, which are :

(1) H.P. per square foot of frontal area, which governs maximum speed.
(2) B.H.P. per ton, which determines acceleration.
(3) Braking power expressed over the entire race distance.
(4) Road worthiness.

The first two qualities are easily measurable, and if races were run on tracks with theoretically correct banking and perfect surfaces nothing more would be needed in order to predict the fastest car.

The above statement is, of course, a broad one. It needs modifying in detail to take account of the drag coefficient for a given frontal area ; the weight distribution of the car which determines how much power may usefully be put through the driven wheels ; and the important factor of tractive losses in the tyres concerning which little is known. Generally speaking, however, maximum speed follows very closely upon a cube root law, so that to raise the maximum speed by 10 per cent it is necessary to raise the power per square foot of frontal area by 33 per cent.

In theory such a rule could be substantially modified by changes in body form that affected the drag coefficient ; in practice this has not yet (1953) been so. Designers have found that the use of a really good aerodynamic form involves disadvantages such as greater weight, impaired cooling of the tyres (and greater difficulty of changing wheels) and, above all, inherent instability as the centre of wind pressure moves steadily forward until it is far forward of the centre of oscillation ; in fact, at high speeds the centre of pressure may be well ahead of the nose of the car ! These facts delayed the streamline form from Grand Prix racing on road circuits until 1954, and although the body shape of a 1953 Grand Prix car had lower wind resistance in itself than the hull of a 1914 type, this no more than offset the increased drag of the very large section tyres used on the later, and far faster, cars.

The power lost in driving the tyres themselves is, as has been said before, a subject about which little is known, but there are reasons for believing that at really high speeds it varies as between the square and the cube of the road speed and the frontal area and wind drag of the tyres is very large. In sum, application of the cube root law to the power per square foot of frontal area, gives a reasonable picture of maximum speed potentialities.

Power per ton is another clearly definable quantity which has to be interpreted through two aspects ; firstly, the net weight carried by the driven wheels, and secondly, that the power may be more than sufficient to spin them. In the former case we are fortunately not required to encounter any major variations. Probably the smallest proportion of weight placed on the rear wheels (and on all the examples considered, these are the driving members) was, say, 50 per cent, and the maximum 60 per cent. We shall not be far wrong to take a figure of 60 per cent up to 1934 and 55 per cent thereafter as normal practice.

Relating h.p. per ton to wheel spin is a more subtle affair, but the following figures will not be found wide of the mark :

B.H.P. per Ton	*Maximum Wheel Spin Speed*
100	50 m.p.h.
200	80 m.p.h.
400	150m.p.h.

The higher figure presupposes the use of a limited slip differential, the lower presumes an ordinary type. It will be apparent that in the higher powers variations in h.p. per ton figures do not give a direct guide to acceleration, since only part of the power available can usefully be employed. The relative influence of power : weight and the number of driving wheels on acceleration over a standing kilometre have been dealt with in some detail by Eberan von Eberhorst in his Paper, " Hochsleistung im Rennwagenbau " in the *ATZ,* Vol. XI, 1939. He says therein :

> " Calculations of the effect of weight and air resistance upon acceleration have to allow for the fact that (1) average figures produce serious errors ; (2) the maximum output of any engine cannot be represented by a simple mathematical function ; (3) possibility of integration is questionable. However, from the known total resistance curve and the maximum engine h.p. curve it is possible to determine the surplus forces available for acceleration on each gear with a known speed and rear wheel radius. The reciprocal values for acceleration can thus be determined allowing for both the translatory and rotating mass.
>
> In starting the surplus forces will be greater than the tractive limit on the driving wheels and acceleration will be determined by the weight on the rear wheels x the coefficient of friction, minus air resistance and tractive losses. The process of acceleration can be viewed in three phases. First, at the limit of the wheel slip, second, according to the surplus h.p. curves in the individual gears, thirdly, after the surplus forces fall to zero when constant speed is reached.
>
> Knowing the above factors speed can be obtained as a function of time, and by further integration a space-time curve can be derived.
>
> In the case of the Grand Prix Auto Union car of 1937 it was possible to check the actual results obtained over a standing kilometre with those theoretically calculated with various alternative designs. The Auto Union car holds the world's speed record over this distance, but the theoretical speed remains somewhat better if one assumes that there is no gear changing required and that the coefficient of friction could be raised to 1.1. Nevertheless, even with an infinitely variable gear the time required is shortened from only 18.4 secs. (actually realised) to 18.31 secs., and if the lower efficiency of such a gear be taken into account the mean speed would actually be reduced by 3½ m.p.h.
>
> Theoretically, the extra weight of a streamlined car should reduce the speed by 0.94 m.p.h. (and this was confirmed in record attempts on the Frankfurt-Darmstadt Road), but if the reduced drag could be obtained without extra weight there is the theoretical possibility of increasing the average speed by 3.76 m.p.h.
>
> It is interesting to note that four-wheel drive would reduce the time required to cover a standing kilometre by only one second if no weight penalty were incurred, but as this is hardly possible, and making reasonable allowances for the extra weight of this method of transmission, it would offer no improvement over rear-wheel drive.
>
> One concludes that for Grand Prix racing a normal four- or five-speed box with rear-wheel drive and the lowest possible weight represents the best combination. The overriding importance of weight is shown by the fact that if it were possible to halve the existing weight the s.s. Km. speed with four-wheel drive would increase by 25 per cent, or with rear drive and full streamlining by 24 per cent. It must, however, be remembered that such gains only take effect over at most half the length of an ordinary racing circuit, as the braking times would be increased and the maximum speed remain unchanged."

In another paper " Rennformel und Zukunft," published in the *Automobiltechnischen Gesellschaft,* Eberan reproduces some curves relating engine power and average speed on a number of circuits. Taking an average of fast and slow circuits and correlating them with other statistics, one concludes that average speeds rise as the square root of maximum speeds and as shown in the preceding Chapter the evidence of racing over fifty years confirms this.

As maxima vary with the cube root of h.p. per square foot it is evident that average speeds should rise with the sixth root of engine power, e.g. a 5 per cent gain in circuit speed demands a 34 per cent increase in power per square foot. Obviously, such a formula is empiric. It could not remain valid if increases in power were not matched with improvements in braking and road holding ; improvements in chassis design can in themselves lead to gains in speed with no increase in engine output ; and the formula is necessarily limited to the type and size of car used in Grand Prix racing.

The differences in average speed, which might, on theoretical grounds, derive from changes in various aspects of design, have been calculated by von Eberhorst in an article appearing in the fourth issue of Volume I of " Auto Course ". He shows here that an increase in engine performance by 10 per cent, from 390 to 430 b.h.p. would increase lap speed at Monza by 0.53 per cent, but at Silverstone by only 0.16 per cent, although on a sixth root basis the expected figure would be 1.56 per cent. On both circuits a greater gain could be attained by a 10 per cent improvement in braking ; from 0.5 g. to 0.55 g. This would raise the Monza lap speed by 0.56 per cent and the benefit at Silverstone would be 0.60 per cent. Finally, improvement in engine power or braking, of this order, and even the two together, are of far less value than an increase in cornering speed, arising from putting the limit of lateral acceleration up by 10 per cent, from 0.6 g. to 0.66 g. This would give a gain in speed of 2.67 per cent

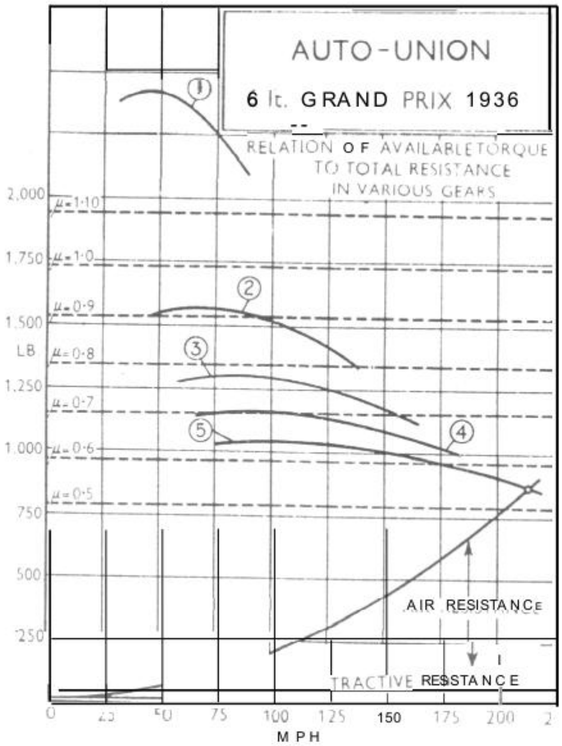

UNUSUAL ANALYSIS.-This graph has been specially prepared by Prof. Dr. Eberan von Eberhorst to show the surplus horse-power available on all five speeds on the 1936 Grand Prix car, using a top gear giving 210 m.p.h. at 5,000 r.p.m. The gear uiually employed gave 175 m.p.h. at this speed, but even on the higher ratio it will be noted that the wheelspin can be provoked below 100 m.p.h. on first and second gears on dry roads and at up to 175 m.p.h. on all gears with a wet road having a coefficient of friction of 0.6

at Monza, and 3.41 per cent at Silverstone. These figures explain how, at certain periods in racing car history, when special attention has been paid to braking systems and road worthiness, substantial gains in lap speed have been attained with little increase in engine power, or even, in some cases, in the face of a sensible debasement of engine power. But with a few notable exceptions, the relationship proves historically correct with an astonishing degree of accuracy and is a most useful guide to the general progress of design, provided it is used as a guide, and not as an infallible rule.

The influence of braking on average speeds is most difficult to assess. The exact proportion of a race during which the brakes are used will vary with the course, but a figure of 30 per cent of the time, that is to say, one hour total, may be considered typical on the fastest type of car. The rate of deceleration, particularly from the higher speeds, is not so high as might be supposed, and it is doubtful if 0.5 g. would normally be reached with 0.25 to 0.33 g. as more normal figures. One of the most important features of braking is stability of performance over a long period of time and there is no doubt that average speeds were raised not only by the introduction of four-wheel brakes (used by four constructors in the 1914 Grand Prix and universally from 1921 onwards), but also by the very much improved friction linings introduced *circa* 1930, by the re-introduction of hydraulically operated brakes in 1934 and multiple leading shoes from 1936 onwards.

To estimate the statistical effect of road worthiness is impossible, but as this technical narrative unfolds it will be seen that at certain times, and with certain models, the gain in average speeds is more than can be accounted for by any reasonable evaluation of the first of the three factors above set out and must, therefore, spring from the fourth.

No allowance is made for " super tuning " or super driving, although there have been occasional men who have had the reputation of being wizards of tune and able to make their individual motor-car lap far faster than any other example of the type. It can be fairly stated that in every case the design concerned was one which had not been fully developed by the experimental department of the manufacturers concerned. With Grand Prix cars this circumstance rarely, if ever, applied and one can think of hardly any instance where the circuit speed of one *car* in a team has been very greatly different to that of another.

There are very marked variations in average speeds secured by differing drivers, and some have been mentioned in Volume I. It follows that if one team of cars secured all the best drivers the relative performance of the design would be unfairly exaggerated, so from a technical point of view it is fortunate that this has never happened. One ace driver has often put up much better performances than his team-mates, but this has usually been balanced by equally " abnormal " performances on the part of stars driving rival designs.

It may be said that of only two drivers certainly, and less than six possibly, that their personal skill was sufficient to counterbalance a deficiency in engine or chassis design.

When we turn from comparing cars as a whole to power units in particular, we find it necessary to choose the bases of our comparisons with particular care, so as not to fall into errors from which false conclusions could be drawn. In particular it is necessary to demolish the value of h.p. per litre as a means of evaluating engine design.

We can calculate b.h.p. if we know all the quantities involved by using the classic formula $\frac{P \times L \times A \times N}{33,000}$ in which

P = the brake mean effective pressure in lbs. per square inch ;
L = the length of stroke in feet ;
A = the aggregate area of the pistons in square inches ;
N = the number of power strokes per minute.

The history of engine development is compounded of all four elements above mentioned. The value of P is determined by the weight of mixture which passes through the valves during the inlet cycle ; the pressure to which it is raised during the compression cycle and the efficiency with which it is burned through the power stroke.

The factors L and N are of particular interest in that they are virtually interchangeable. Piston speed, the product of L x N, is a fundamental limiting factor in engine design and no one has succeeded in producing an engine of any type which will run efficiently and reliably at much over 4,000 ft. per minute. It follows that if L is 152 mm. (i.e. 6 in. or ½ ft.), then for every revolution, the piston will travel 1 ft., so that 4,000 f.p.m. is equivalent to a maximum of 4,000 r.p.m. By reducing the stroke to 76 mm. (or 3 in.), it will be possible to raise the crankshaft speed to 8,000 r.p.m. without exceeding the previous limit of piston speed, since the product of L and N is unchanged, Hence if P and A remain equally unvaried the output will remain the same. In the second case, however, the swept volume of the cylinders (the product of A x L) has been halved and the power per litre doubled.

This, admittedly extreme, example discloses the inherent fallacy of comparing engines on a power per litre basis; but it must be admitted that the use of this value is deeply ingrained as a consequence of the use of swept volume in Grand Prix racing formula: and in record breaking. A capacity limit was first imposed in the 1907 Kaiser Prize Race (when it was 8 litres), and this was followed by a 3-litre limit for the popular Coupe de l'Auto Races of 1911, 1912 and 1913, and of 4½ litres for the French Grand Prix of 1914. A 3-litre capacity limit was in force in Grand Prix racing in 1920-1 and 1938-9, 2 litres was the limit in 1922, 1923, 1924 and 1925, and 1½ litres in 1926 and 1927.

In the post-war period Formula I stipulated 1½ litres (S.) or 4½ litres (U.S.) and Formula II 0.5 litres (S.) and 2 litres (U.S.). In these years power per litre had an absolute significance and has thus acquired a very respectable ancestry. Indeed, so long as the engine volume lay between 2 and 3 litres it formed a convenient and not grossly misleading factor with which to test the merits of a design. The compass of this book, however, extends over much larger variations, from engines having piston strokes of 185 mm. and a capacity of 18 litres down to types having a stroke of 76 mm. and a capacity of 1½ litres, and to make a fair comparison in so wide a field it is imperative that we should abstain from relating power to swept volume and pay regard to the fundamental formula expressed above. In other words, we must concern ourselves, not with crankshaft revolutions and cylinder capacity, but with piston area and piston speed and brake mean effective pressure. This will lead us from h.p. curves expressed against crankshaft revolutions to curves of b.m.e.p. (or of h.p. per square inch of piston area) against piston speed. These are convenient and absolute standards and it is interesting to compare the output curves of five unsupercharged engines of widely different type and age as an example.

As tabulated the figures are :

Date	*Car*	*Capacity Litres*	*B.H.P.*	*B. H. P./Litre*
1907	4-cylinder (180 x 160) Fiat	16	120	7.4
1914	4-cylinder (101 x 140) Vauxhall	4½	130	29
1921	4-cylinder (70 x 130) Delage (1922 Prototype)	2	80	40
1922	4-cylinder (85 x 132) Vauxhall	3	125	41.7
1924	12-cylinder (51.5 x 80) Delage	2	120	60

The h.p. curves of these engines set out in a graph show great dissimilarity, but when re-drawn on a basis of piston speed related to either b.m.e.p. or h.p. per sq. in. all the 1921-4 examples stand remarkably close together. It is particularly interesting to compare the two Delage engines having equal capacity but four and twelve cylinders respectively, as on a power per litre basis the twelve-cylinder engine is 50 per cent better than the four-cylinder design. The other curves reveal, however, that at 3,500 f.p.m. the 1921 engine develops 125 b.m.e.p., which is better by 15 lb. than the 110 b.m.e.p. of the 1924 model. The older type is also superior on a basis of h.p. per sq. in. of piston area. In other words, the 50 per cent gain in h.p. per litre was derived entirely by an increase in cylinder number and piston area, and in the face of a definite inferiority in detail design.

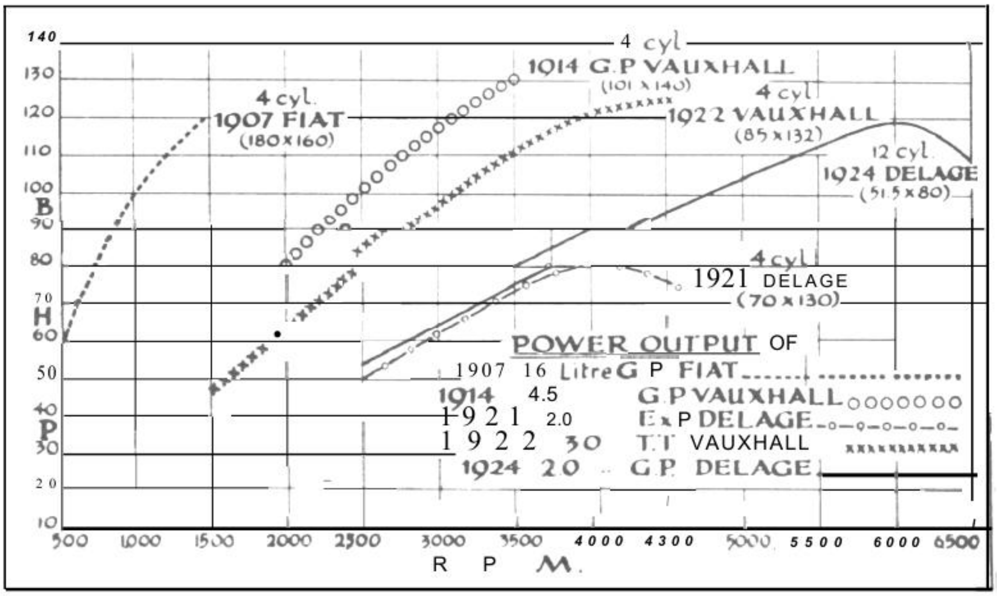

From the foregoing it will be apparent that under any capacity rating the designer who chooses the largest piston area, the shortest stroke, and the highest r.p.m., has secured a fundamental advantage. This notwithstanding, history is replete with examples of successful racing cars having few cylinders, limited piston area, long stroke and low r.p.m.

This apparent contradiction between theory and practice is explained by the fact that working within the framework of existing bearing surfaces, valve gear stresses, and materials, crankshaft speeds have often been limited irrespective of piston speed. The stressing of bearings, for example, is computed on a Pressure x Velocity factor, and in 1923 Sir Harry Ricardo wrote : " If a continuous mean speed of over 4,000 r.p.m. is to be maintained some form of crankpin bearing other than a plain, white-metal lining will have to be employed."

In 1912 Henri set a fashion for G.P. engines with big stroke : bore ratios, and by so doing produced tall power units which tended to have rather poor rigidity and demanded high bonnet lines. They gained by having small diameter (and easily cooled) pistons and valves, and compact combustion chambers which gave good burning of the charge but as, from 1923 onwards, the problems of revolutions in themselves were gradually overcome, piston strokes were steadily shortened, either by reduced stroke: bore ratios or, as an alternative, by an increase in the number of cylinders. Both of these developments are studied in detail in later chapters.

A study of valve area and power per square inch thereof is also germane to our line of technical enquiry. Power output is finally dependent upon weight of air efficiently burnt per minute, and this in the end is fixed absolutely by the breathing power of the valve gear. In detail the gas flow will depend upon the area of the valves, the lift, and the time during which they are open.

Throughout the examples area has been calculated on the basis of the overall diameter of the valve and the actual throat of the valve seat through which the gas flows will normally be 10 per cent less.

The importance of the valve timing diagram must not be overlooked, for the overall factor of importance is square inch degrees ; that is to say mean effective area multiplied by time per minute during which the valve is opened..

The shape of the ports and their relation one to another exercise an important influence on volumetric efficiency, and it will be seen that some engines have an appreciably higher flow value per square inch of area than others.

These curves are the counterpart of the data given on the previous page but expressed in absolute units.

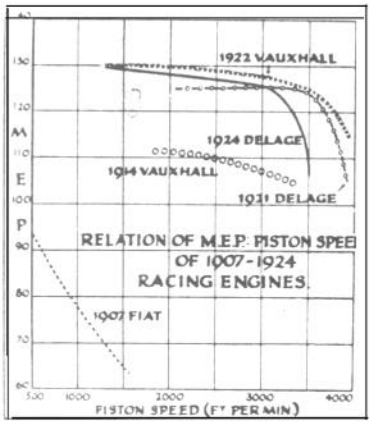

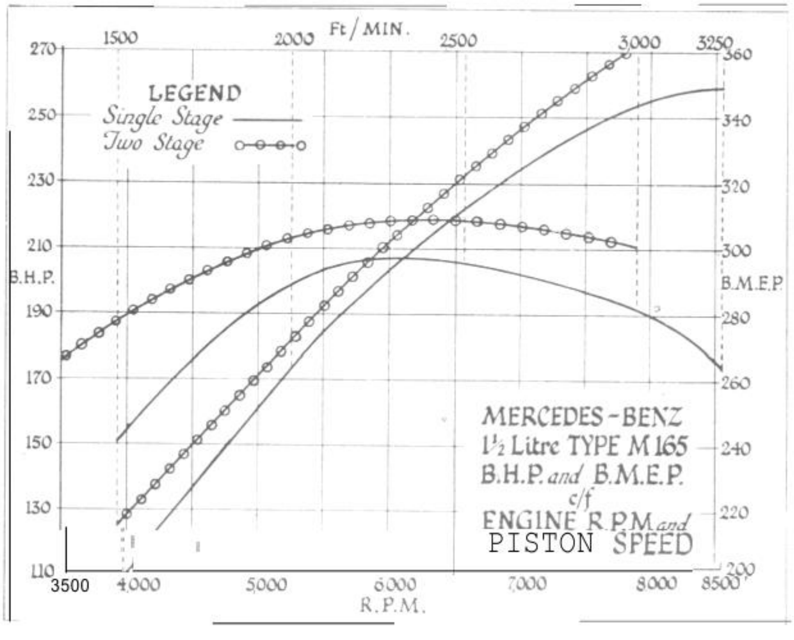

Curves for b.m.e.p. and piston speed can be combined with the better known comparison of b.h.p. and r.p.m. This example is taken from a 1939 Mercedes-Benz engine.

Artificially raising the inlet manifold pressure is an obviously simple way of avoiding a restriction on capacity based on the swept volume of the cylinders. In effect, by raising the absolute pressure in the manifold from 1 Atm. to 1.5 Atm., designers were able, in 1923-4, to use 3-litre engines whilst keeping inside the 2-litre capacity limit. From this point onwards, therefore, judgment on engine statistics has to be clarified by some knowledge of the supercharge pressure employed.

For the first twelve years (1924-36) in the history of the supercharged engine we can make a reasonable comparison between the unblown and the blown type by reducing all the figures obtained on the latter in proportion to the absolute manifold pressure. If, for example, we observe an engine giving 180 b.m.e.p. and 5 b.h.p. per sq. in. of piston area, with an absolute induction pressure of 1.5 Atm., we can say that it is the equivalent, from a design viewpoint, of an unsupercharged type with an output of 3.3. b.h.p. per sq. in. of piston area and 120 b.m.e.p.

From 1937 onwards such comparisons are vitiated by the increasingly large amounts of power absorbed in driving superchargers designed to produce manifold pressures of up to 2.5 Atm. For example, the supercharger on a 1924 2-litre car, with a pressure rise of 7.5 lb. per sq. in., would require about 20 b.h.p. compared to a net figure of 170 b.h.p. from the flywheel. The 1938 3-litre cars with a boost of 20 lb. per sq. in. required over 150 b.h.p. for the blowers compared with 450 b.h.p. realised on the crankshaft. In other words, the early type can be considered as a 190 h.p. engine less 10 per cent for the blower ; the latter type must be pictured as a 600 b.h.p. engine minus 25 per cent for the blowers.

These sacrifices notwithstanding, the supercharger became an integral part of engine design even when cylinder capacity was unlimited. The supercharged engine was in all circumstances able to show a superior power : weight ratio and, in addition, the mechanical mixing imparted to the ingoing charge eased many fuel distribution problems.

The entire development of the supercharged engine was closely coupled with changes in fuel. Although a major race (A.V.U.S.) was won by a car using a mixture of Petrol, Benzol and Tetra-Ethyl-Lead as late as 1934, from 1924 onwards racing car engines were normally run on fuels having a high content of alcohol. This gave improved anti-detonation characteristics and, far more important, lowered the temperature of the ingoing charge by reason of the high latent heat of vaporisation. On the other hand the lower calorific value of the alcohol resulted in much higher rates of fuel consumption. The quantitive effects are examined in a later chapter, but it is important to recognise that one cannot fairly compare an engine running on petrol with a 6 : 1 compression ratio and atmospheric induction pressure with one running on alcohol and using a 7 : 1 compression ratio with a manifold pressure of 1.7 Atm. It will, incidentally, be convenient to distinguish between boost pressure above the normal atmospheric and absolute manifold pressures by using a German convention of " Atu " for the former and " Ata " for the latter ; e.g. 15 lb. boost is 1 Atu but 2 Ata.

CHAPTER EIGHT

Ancient to Modern

UP to the 1914 war the Grand Prix of the Automobile Club de France stood by itself as an event of international importance. No races were organised by the Club for the years 1909, '10 and '11, so that there were only six events in the nine effective racing years. These, both technically and chronologically, may be conveniently divided into three pairs.

The first two races may be considered as virtually a continuation of the Gordon Bennett type of car ; the last two, 1913 and 1914, saw the embodiment of all the mechanical features (except superchargers and independent suspension) which have been used from that day onwards ; the races of 1908 and 1912 formed the bridge between the two movements.

In the 1906 and 1907 Grand Prix events all the effective competitors had four-cylinder engines with exceedingly large swept volumes judged by modern standards. The biggest power units had 18.3 litres in 1906 and 19.6 litres in 1907, the winning cars having engines of 13 and 16.3 litres. Moreover, apart altogether from variations in design with different makes, many of the leading competitors ran Grand Prix cars almost, if not completely, identical with their immediate predecessors. The Richard-Brasier, for example, which had won the 1905 Gordon Bennett Race, was continued almost unaltered for the first two Grands Prix, and it made the fastest lap in 1906. The broad specification of the 1907 winner was also scarcely changed from the 1905 design, although output had been increased by.approximately 10 h.p.

The dawn of the present age began in 1908, in which year the regulations limited the piston area so that the maximum bore for a four-cylinder engine was 155 mm. This forced designers to construct entirely new engines, and at once we see two marked developments from previous practice. Some constructors sought power by increasing engine r.p.m. and piston speed, others by developing brake mean effective pressure. The Itala (Example No. 1) followed the former trend ; the winning Mercedes design typifies the latter. It is significant to make a technical comparison between these two 1908 cars, the Richard-Brasier, which had been so successful in 1905. and 1906, and the winning Fiat of 1907.

ENGINE DEVELOPMENT 1905 TO 1908

Make	*Year*	*No. of cyls.*	*Cyl. dimensions m/m*	*Cyl. capacity Litres*	*B.H.P.*	*R.P.M.*	*Ft./ Min.*	*M.E.P.*	*H.P. Litre*	*H.P.sq ins.*
R. Brasier	1905	4	160 x 140	11.3	101	1,350	1,240	86.5	9.1	0.84
Fiat	1907	4	180 x 160	16.3	130	1,600	1,680	65	8.05	0.82
Mercedes	1908	4	155 x 170	12.8	135	1,400	1,570	96.5	10.4	1.15
Itala	1908	4	155 x 160	12.05	100	1,600	1,700	67	8.3	0.85

The crank and piston speed of the Itala may be considered exceptional, but it is interesting to note that during the first three Grand Prix events, designers maintained very short stroke : bore ratios, the figures for the winning cars being :

1906	0.90	: 1
1907	0.89	
1908	1.10	
Average	0.98	: 1

Improvements in detail design are plainly apparent in the gains in b.m.e.p. and h.p. per sq. in. of piston area realised in the Mercedes design. This was achieved without any basic changes in materials or layout, for at this stage in automobile development there was still much to be done in the way of minor refinements of cam form, induction pipe design and valve settings.

Transmission, frame, and suspension lay out showed little change, although there was a steady trend towards displacement of chains by live axles. Shock absorbers, which had been introduced by Mors in 1899, were now universally employed and this, in conjunction with light axles (the front beams being unembarrassed by the weight of brake mechanisms), permitted relatively soft suspension and excellent handling characteristics, thereby contradicting the high and comparatively unstable appearance of the cars.

The height was neither a whim nor a fashion retained without reason. A drawing of the 1908 winning car shows that the 21½ in. diameter flywheel was given a clearance of 6½ in. from the ground, and this brought the centre line of the crankshaft approximately 17 in. from the ground. With a 170 mm. stroke and allowance for overhead valve gear the top of the engine becomes 48 in., and the highest point of the bonnet 50 in., above the ground.

The driving position was built up in the following fashion. The rear wheel diameter was 35 in., making the centre line of the rear axle 17½ in. from the ground. The bottom of the frame was on the centre line of the rear axle and the chassis members were 5.1 in. deep, and the seat came 8 in. from the floor boards, so we get a final height from the ground to the seat cushion of 31½ in. This brings a normal driver's head rather over 5 ft. from ground level.

It will be seen from the foregoing statistics that although these cars had a high centre of gravity they also had a high roll centre and the 1908 models generally had an extremely effective performance on the road and were far faster than the 1906 and 1907 models.

The 1908 Grand Prix cars can be regarded as signposts of what was to come. The winner of the 1912 Grand Prix was the seed from which modern racing cars have sprung. The event, one of intense technical interest, was run over the Dieppe Circuit used in 1907 and 1908, and it is, therefore, possible to make definite speed comparisons despite the lapse of three years.

Designers had a free hand in the matter of engine size and type of car, and the race resolved into a struggle between a continuation of the 1908 type of car run by Fiat and a new concept sponsored by Peugeot. The former car was powered with an engine of four cylinders, 150 x 200 mm., giving it a capacity of 14 litres. The four over-

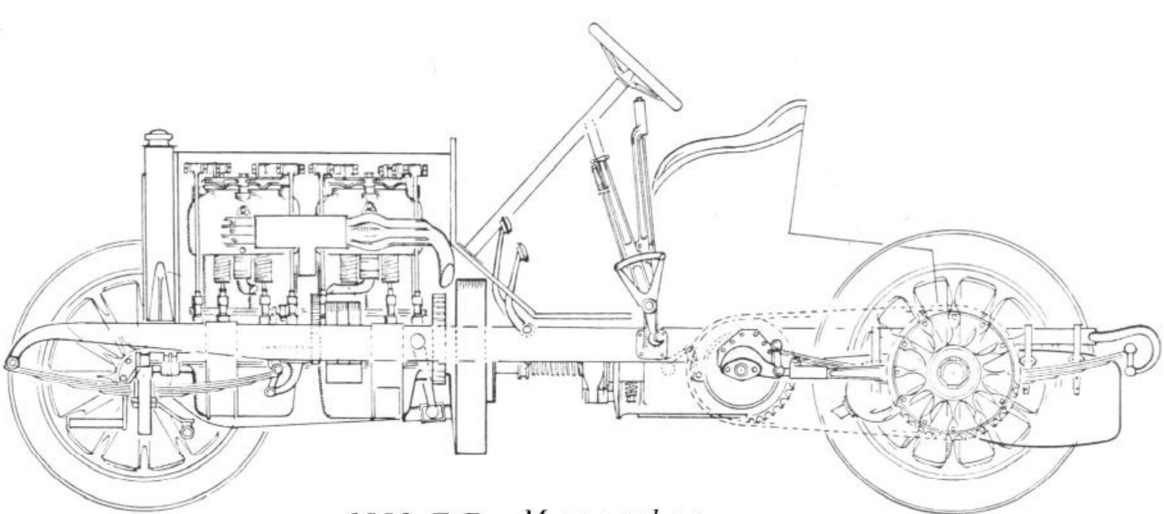

1903 G.P. Mercedes

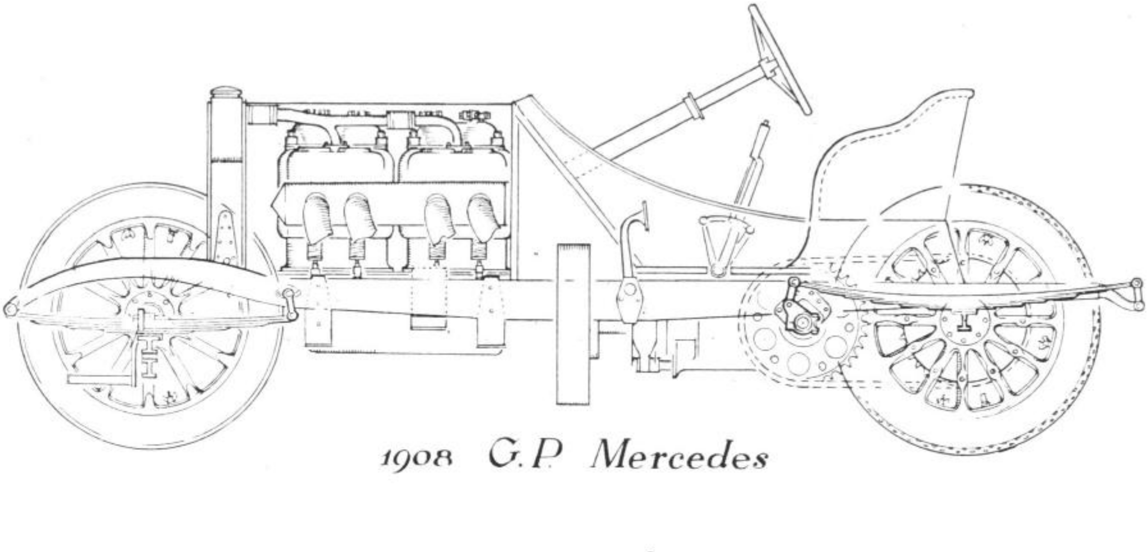

1908 G.P. Mercedes

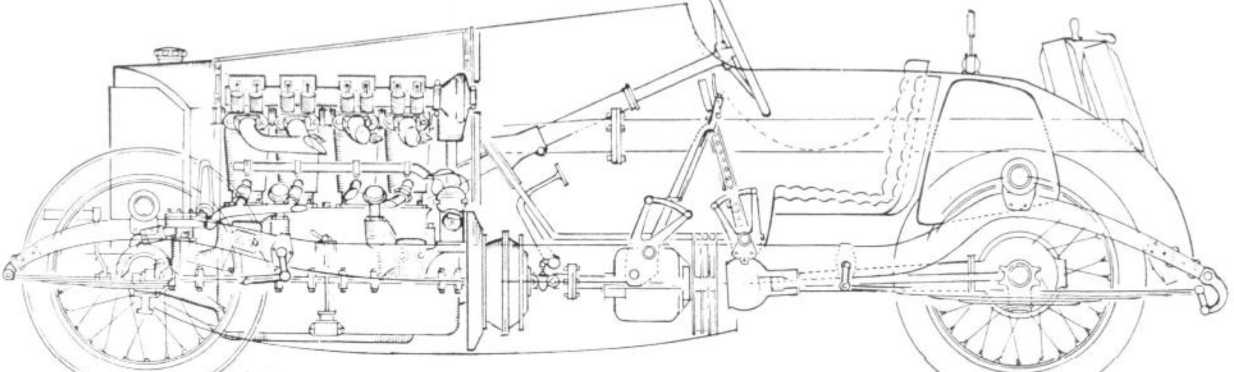

1914 G.P. Mercedes

Winning Mercedes racing cars, 1903-1914. Scale 1 : 25

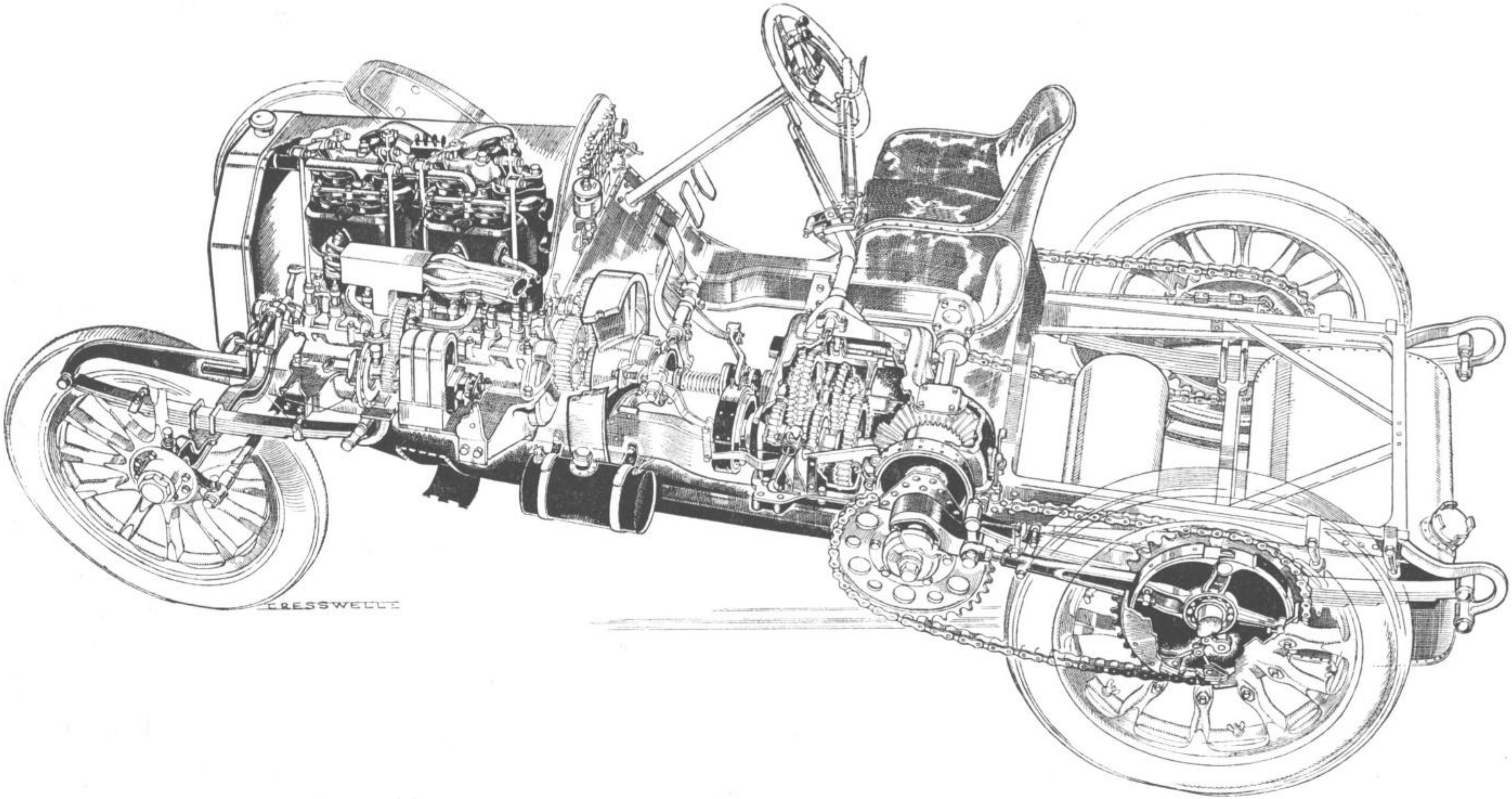

The 60 h-p. Mercedes–winner of the 1903 Gordon Bennett Race head valves per cylinder were operated by an overhead camshaft and chain drive was used to transmit the power to the fixed wooden wheels with detachable rims. These cars proved to be the fastest on the circuit, and if they had not been put out of the running by entirely petty troubles would most certainly have won. Victory was secured, fortunately perhaps, by the more technically interesting design of Peugeot. This car used a four-cylinder engine, 110 mm. by 200 mm. (7.6 litres capacity) and it should be immediately apparent that it represented a complete departure in the matter of stroke : bore ratio from the practice of 1906-8.

The source of this change may be found in the Lion-Peugeot entries in the voiturette racing of 1909 and 1910, voitures légères of 1911, and in particular those events sponsored by the French paper *l'Auto* . From 1906 onwards the engines used in the annual competition for the cup put up by this enterprising journal were limited in the following way :

1906-Single-cylinder engines maximum bore 120 mm., two-cylinder engines maximum bore 90 mm., minimum weight 700 kg.

1907-Single-cylinder engines maximum bore 100 mm., maximum weight 670 kg., two-cylinder engines maximum bore 80 mm., maximum weight 850 kg.

1908-Single-cylinder engines maximum bore 100 mm., two-cylinder engines maximum bore 80 mm., four-cylinder engines maximum bore 65 mm., with minimum weights of 500, 600 and 650 kg. respectively.

1909-Single-cylinder engines 100 x 250 mm. up to 120 x 124 mm., two-cylinder engines 80 x 192 mm. up to 95 x 98 mm., four-cylinder engines 65 x 150 mm. to 75 x 75 mm.

1910-Single cylinder, maximum bore 100 mm., maximum stroke 300 mm. = 2.35 litres capacity ; two-cylinder, maximum bore 80 mm., maximum stroke 280 mm. = 2.8 litres ; four-cylinder, maximum bore, 65 mm., maximum stroke 260 mm. = 3.45 litres, minimum weight, 650 kg.

1911-Maximum engine capacity 3-litres with S : B ratio not exceeding 2 : 1 or under 1 : 1.

1912-As 1911, minimum weight 800 kg.

1913-AS 1912, but maximum weight 900 kg. and superchargers barred.

As can be seen from a discussion of these events in the first section of the book, the result of these regulations was to foster cars with extreme S : B ratios and although the Lion-Peugeot cars were specifically the winners of the Coupe de l'Auto in 1909 only, they put up the fastest lap not only in that year but also in the two subsequent years. The automobile side of the Peugeot family enterprises was divided into two parts. Large cars were built in Paris whereas cycles, motor cycles and small cars, sold under the name of Lion-Peugeot, were constructed near Belfort. It is from this last-named concern that the Coupe de l'Auto cars emanated. The chassis of the models with semi-elliptic springs and chain drive was not particularly remarkable, but the engines showed great ingenuity.

Although in 1907 the limited cylinder bore of 100 mm. was used in conjunction with the then-orthodox S : B ratio of 1.2 : 1 from 1908 onwards the designer, M. Michaux, wholeheartedly joined, if indeed he did not lead, the trend towards quite abnormal stroke : bore ratios. One might have thought it logical to use piston strokes

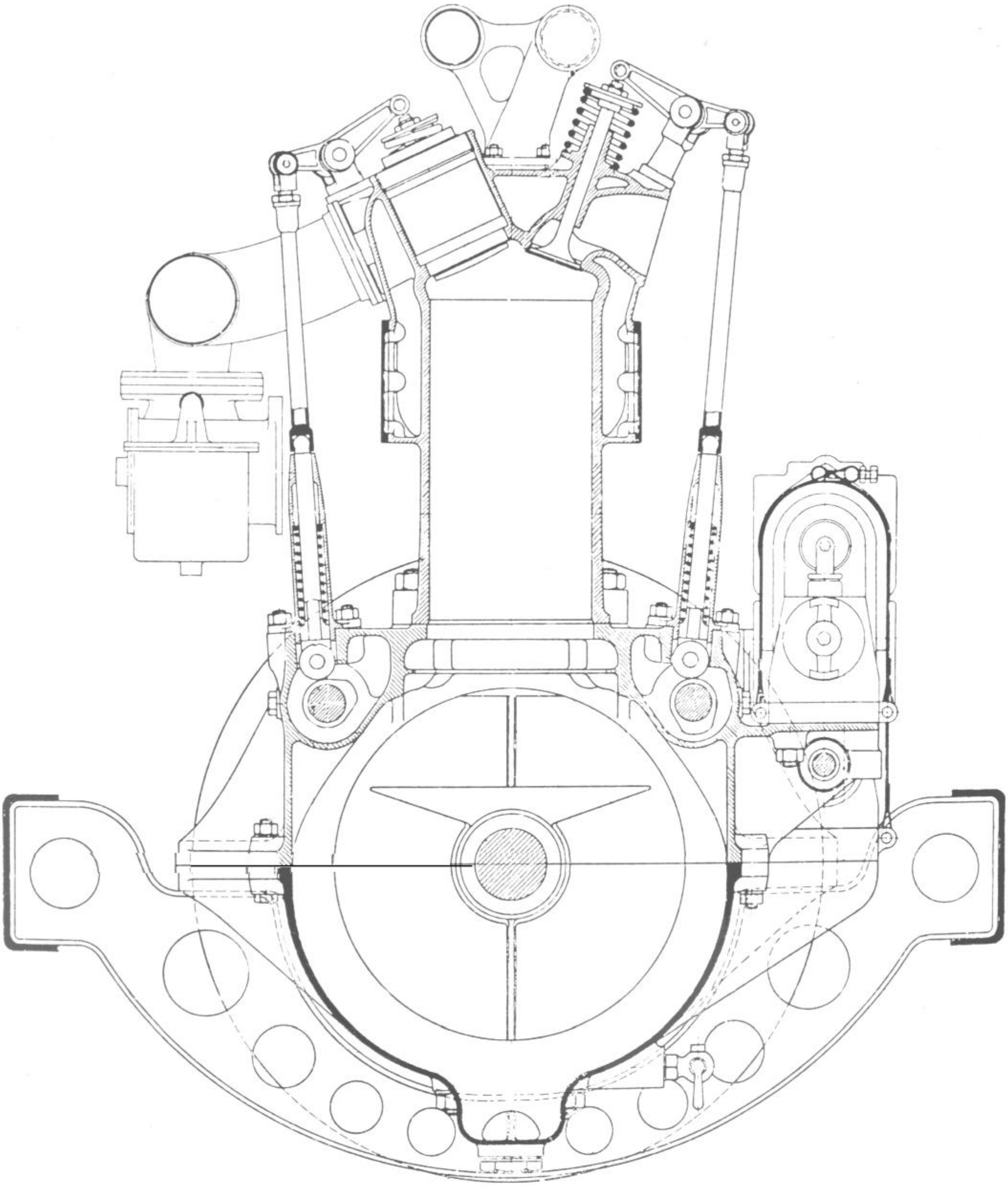

The 1910, 7.3 litre, Prince Henry Benz engine. Scale 1 : 4.

already established in the realm of Grand Prix racing, even when the cylinder bores were limited by regulation, and there would thus have been nothing surprising in the use of strokes of up to 190 mm. (for this dimension was used on the 1899 Peugeot and the 1901 Mors) and strokes measuring between 170 and 180 mm. were commonplace for the 1906-1908 Grand Prix cars. But figures of this order were quickly exceeded by the small cars and it is of interest to take some typical instances using the same criteria employed in the table of typical 1905-8 models set out on an earlier page.

LIGHT CAR ENGINE DEVELOPMENT 1908 TO 1911

Make	*Year*	*Cyls.*	*Dimensions*	*Piston area sq. in.*	*Cyl. capacity*	*b.h.p.*	*r.p.m.*	*ft/min.*	*b.m. e.p.*	*h.p./ litre*	*h.p./ sq. in*
Sizaire-Naudin . .	1908	1	100 x 250	12.2	1.96	25	2,400	3,937	79.3	12.8	2.07
Peugeot	1909	1	100 x 250	12.2	1.96	30	2,200	3,620	90	15.4	2.46
Brooklands Vauxhall	1909	4	90 x 118	39.4	2.99	45	2,250	1,775	86.5	15.0	1.14
Peugeot . . .	1910	2	80 x 280	15.6	2.80	40	2,200	4,042	85	14.2	2.55
Hispano-Suiza	1910	4	65 x 200	20.05	2.65	45	2,500	3,300	88.5	17.0	2.2
Brooklands Vauxhall	1910	4	90 x 118	39.4	2.99	60	2,750	2,170	101.0	20.0	1.53
Delage	1911	4	80 x 149	31.1	2.99	50	2,500	2,440	86.2	16.7	1.77

The h.p. figures given for the 1908 Sizaire-Naudin and 1909 and 1910 Peugeot cars are estimates based on their lap speed at Brooklands. The others are derived from various published information although it must be remembered that these races attracted comparatively little attention in the current motoring press and the data contained therein is very scanty. But whether or not the figures are exact for any individual car we can say that those performance factors influenced by crank and piston speed, i.e. h.p./litre and h.p./sq. in., show a tremendous increase in comparison with the Gordon Bennett and Grand Prix cars built in the preceding four years. Figures for b.m.e.p., on the other hand, showed little development ; indeed the designers were taxed to the limit to sustain this quality in the face of increasing speeds and they resorted to a number of expedients in order to retain adequate valve area.

Michaux for Lion-Peugeot showed a partiality for multiple valves and the 1909 single-cylinder car had three inlet and three exhaust valves placed horizontally and opened by a rather complicated system of eccentrics and connecting rods.

The 1910 two-cylinder model had a camshaft mounted vertically in front of the cylinders which opened two horizontal exhaust valves (each 46 mm. diameter) and simultaneously drove through bevels a horizontal camshaft passing between the cylinders which opened a single 62 mm. inlet valve in each cylinder head. Inlet and exhaust valves closed virtually at T.D.C., the inlet closing 39 degrees A.B.C. and the exhaust valves opening 50 degrees B.B.C. The inlet valve thus had a total opening period of some 219 degrees.

It will be seen that the valve area on this engine was 9.35 sq. in., giving 3.8 h.p./ sq. in. of valve area-a figure rather higher than that attained in the Grand Prix cars of an earlier period. On the Hispano-Suiza also the use of a T-head must have made it possible to employ four inlet valves not less than 55 mm. diameter, that is to say, a total valve area of 14.8 sq. in. and a flow value of 3.85 h.p./sq. in. On the other hand, the use of an L-head on the Vauxhall limited the valve diameter to 45 mm., giving the very high flow factor of 6¼ h.p./sq. in.

On paper the very long stroke engines produced an impressive set of figures ; indeed, as it was not until after 1920 that designers solved the crank and valve-gear problems associated with speeds of over 3,000 r.p.m., the long stroke type had much to recommend it as an engine under piston area regulations. But even as early as 1910 many disadvantages were making themselves felt. Big valve area derived from multiple valves produced complicated core work in the castings, leading to inadequate water passages and inherent overheating and the T-head and the horizontal valve alternatives gave poor shapes of combustion chamber. On the V-twin Peugeot engines in particular the height was such as markedly to reduce the driver's vision and, perhaps even more serious, to raise the centre of gravity to a point where the car could become unstable.

The 1910 regulations definitely encouraged multi-cylinders, the relation between singles, twins and fours- being 1.0, 1.27, and 1.7 on a basis of piston area, and 1.0, 1.2 and 1.48 on swept volume.

A turning point in the development of the Lion-Peugeot cars, and indeed of the racing car as a whole, followed the transfer of Zuccarelli from the Hispano-Suiza to the Lion-Peugeot racing team for 1910. He, like the two other principal drivers, Goux and Boillot, was engineer-trained, and they could all well appreciate the fundamental limitations of the Michaux engines, and indeed of Monsieur Michaux himself. Unlike the majority of racing car drivers, these three had the intellectual power to draw up a specification for a car that would represent a very great technical advance on anything hitherto constructed ; during 1911 they not only sketched out their design on paper but also made some unofficial approaches to various suppliers of components and raw materials. Having safely secured the promise of substantial support, they laid their plans before M. Robert Peugeot, who was so much impressed by the possibility of obtaining a team of racing cars at a cost to himself of only £5,000 that he gave the project his blessing. Moreover, as the A.C.F. were now known to be sponsoring a revived Grand Prix of 1912, the bold decision was made to make the racing department of the Lion-Peugeot Co. responsible for the production of three full-size Grand Prix cars plus a pair of 3-litre models for the ensuing Coupe de l'Auto.

The three drivers asked Peugeot to engage a young Swiss engineer called Henri to translate their ideas on to the drawing board, and in this way the foundations of subsequent engine development were laid.

The Vee engines of Michaux, which inherited a 16 degree included angle between the bores from the two-cylinder Daimler engines supplied to Peugeot in 1894 and described in the original Daimler patent of 1889 were replaced by in-line engines which retained an S : B ratio of approximately 2.0 : 1, but despite a long stroke the secret of the 1912 Peugeot's performance lay in the recognition that crankshaft speeds would continue to increase and that this would force the development of improved valve gear.

As late as 1909 the technical press ridiculed the notion that engines having a crankshaft speed of 2,000 r.p.m. could safely be sold to the public, but in 1910, the Vauxhall designer, L. H. Pomeroy, when replying at a discussion in the Institution of

Automobile Engineers to his paper " Engine Design for H.P. Rating Rules ", said " There is no doubt that before the end of the next twelve months the engine which cannot develop its maximum h.p., and keep going, at 3,000 r.p.m. will be a back number."

The specific Peugeot contribution towards the fulfilment of this prophecy lay in the use of valve gear which combined a compact combustion chamber with large valve area and low inertia. In 1904 the Belgian Pipe engine was built with inclined valve head and a central sparking plug, the included angle between the valves being 120 degrees. Two valves per cylinder were used worked through rockers and push-rods extending down into the crankcase, a camshaft being mounted on each side of the crankshaft. This same general layout was used in the 1908 Prince Henry Benz engine in which the four valves per cylinder were disposed at an included angle of 60 degrees.

Engines with overhead camshafts were also well known, the Mercedes Co. for example producing a six-cylinder of this type with vertical valves placed in a kind of inverted T-head, whilst the extremely fast 1908 Clement-Bayard used a single o.h.c. in conjunction with two inclined valves per cylinder operated through rockers. The advance made by the Peugeot team was in amalgamating all these anticipations and adding to them virtually direct operation. By using four inclined valves per cylinder with two overhead camshafts they lowered the valve gear stresses and enlarged the valve area.

As so often happens, the farm of their endeavour was not immediately garnered. If, for example, the 1909 single-cylinder engine had been built as an in-line four it would have theoretically resulted in an 8-litre power unit developing not less than 120 h.p. and this would have been but little less than the figure actually realised on the 7.6-litre 1912 model, but as crank speeds of 3,000 r.p.m. changed from prophecy to reality Peugeot received a handsome reward for their pioneer work and all their competitors were forced to follow along the same lines.

The 1912 Grand Prix car as it came from Henri's drawing board was also remarkable for being a balanced whole in which the superiority of, for example, the live axle over chain drive was finally established.

The chassis was notable in the use of detachable wire wheels and Hotchkiss drive. The Rudge Whitworth type " knock-off " wire wheel was invented in 1906 and was suggested as an alternative to the detachable rim type for the 1908 Grand Prix, but was specifically prohibited by the regulations for that event. In the following years this equipment became widely used on touring cars, and there were no objections raised to its employment in the 1912 Grand Prix. Peugeot took advantage of this, whereas, as has been before-mentioned, Fiat adhered to the detachable rim despite which handicap they were able to change a tyre in 40 sec. The Peugeot's live rear axle drove the car through the medium of the rear spring leaves on what is known as the Hotchkiss system. The weight of the torque tube was thereby eliminated, and although it was not realised at the time, rear steering effects were considerably diminished.

The car as a whole was remarkable for the care taken in the detail design, and this has been referred to in Part II, Volume I. As compared with its predecessors it will be seen that the h.p. per ton and per square foot were both subject to a useful improvement, but the timed performances of the car show it as more remarkable for the technical advance in engine layout than, prima facie, for any startling increase in speed.

In the 1913 Indianapolis 500-Mile Race this car realised more than 8 m.p.g. at a winning speed of 75 m.p.h. for the 500 miles, and this was an indication that little change in the overall design was needed to meet the requirements of the 1913 French Grand Prix which was run on a fuel consumption basis. A minimum of 14.12 m.p.g. was required, and the winning car, driven by Boillot, actually averaged 16 m.p.g. at a road average of 71.65 m.p.h.

The engine was a refined edition of the 1912 type, the stroke/bore ratio being maintained at 1.8 : 1 with absolute dimensions of 100 x 180 mm. giving a swept volume of 5.6 litres for four cylinders.

A specific consumption of 0.6 pt. per b.h.p. hour on the bench and 15 m.p.g. at maximum speed all-up on the road was claimed for these cars. These creditable figures were doubtless due to the great attention paid to the reduction of mechanical friction, including the use of a two-piece crankshaft bolted together through a centre roller bearing. Ball bearings supported the crank at each end and it was claimed that the engine developed maximum power at 2,100 r.p.m. In common with the 1912 type the designer introduced another feature which was intended to reduce friction loss between pistons and cylinders. This was the expedient known as " Désaxé," which was not uncommon at this time. Heirman, in his work, *l'Automobile à Essence, Principes de Construction et Calculs,* published in 1908, refers to an article by M. Louis Lacoin in No. 34 of the French paper *Omnia,* in which it is calculated that by offsetting the cylinder axes by 50 per cent of the crank radius the overall mechanical efficiency is raised from 77.22 per cent to 78.53 per cent ; and Peugeot made a regular practice of offsetting cylinders in this way. Considerable attention was also paid to increasing the rigidity of the engine by improved crankcase design. The 1912 engine had a conventional crankcase split on the centre-line of the five plain crankshaft bearings, but the 1913 type used a barrel-type crankcase, the crankshaft being inserted through the end complete with the centre main bearing.

Principal competition to Peugeot in 1913 came from a Delage, having four horizontal valves per cylinder and 105 x 180 mm. bore and stroke. Delage had also been prominent in the Light Car Races and the use of a stroke : bore ratio of 1.71 : 1 was, therefore, not unexpected. The lessons of Peugeot successes in 1912 were, indeed, widely disseminated by 1913, and the Excelsior entry had a stroke : bore ratio of 1.66 : 1, the Opel 1.76 : 1, and Sunbeam 1.87 : 1.

Even Itala, with their pre-1908 traditions, used a ratio of 1.36 : 1, and Schneider entered with an S : B ratio of 1.9 : 1.

From a technical viewpoint the outstanding car of 1913 was not the Grand Prix, but the 3-litre, Coupe de l'Auto, Peugeot. Reference to the data table shows that compared to the 1912 type both h.p. per litre and h.p. per sq. in. of piston area were nearly doubled and b.m.e.p. raised by one-third. The car was also extraordinarily light, so that despite an engine capacity of only one-quarter that used on the 1908 cars, there was little difference in h.p. per laden ton. The flow value of the valves also reached a remarkably high figure and the overall result was such that the car was not only much ahead of competitors in its own class, but could also successfully compete with the 1912 and 1913 Grand Prix types, in which engine capacity had not been limited (*vide* Chapter 5, and Example No. 4). It may indeed be said that the appearance of the British Sunbeam and Vauxhall cars in the 1912 Grand Prix, and the performance of the 1913 3-litre Peugeot, were definitive factors in the establishment, for the first time, of a capacity limit in Grand Prix racing in 1914.

The extent to which Henri dominated European designers in 1914 was shown by the entrants for the Grand Prix of that year. Of the thirteen makes (four French, three Italian, two German, two English, one Swiss and one Belgian), ten had four overhead valves per cylinder and one three valves per cylinder. Only Fiat with two valves per cylinder and a Piccard-Pictet with a Burt McCollum single-sleeve-valve engine represented alternative schools. All poppet-valve engines had the camshaft above the cylinder, and Delage, Sunbeam, Vauxhall and Nagant, in addition to Peugeot, used double overhead camshafts.

Peugeot practice in the matter of stroke : bore ratio was equally in evidence. Vauxhall and Fiat had the two shortest strokes, with bore and stroke 101 x 140 mm. and 100 x 143 mm. respectively, but the most popular size was 94 x 160, giving a stroke : bore ratio of 1.6 : 1. The stroke : bore ratio for the winning car of 1912-4 is :

1912	1.82 : 1
1913	1.80: 1
1914	1.71 : 1
Average	1.78 : 1

We observe a paradox inasmuch as the four-cylinder, 4½-litre engines of 1914 had actually a 15 mm. longer stroke than the 12.85-litre winner of 1906, that is to say, the rules enforced a reduction in capacity of 65 per cent ; the designers voluntarily accepted a corresponding diminution of piston area. But, as in the 1908-12 Light Car engines, designers could not convert speed into r.p.m. to the best advantage. If, for example, a four-cylinder engine had been built with dimensions 108 x 117 (a stroke : bore ratio of 1 : 1.08) the current piston speed of 2,800 f.p.m. would have represented 4,000 r.p.m. and a potential output of 165 b.h.p. or 41 b.h.p. per litre. At this time no successful racing engine had been run at over 3,000 r.p.m. or with an output in excess of 30 b.h.p. per litre, and for both mechanical and thermal reasons it was too much to expect designers to take a step forward amounting to 33 per cent in twelve months.

So far as engines are concerned it may, in fact, be said that the 1914 Grand Prix cars confirmed and consolidated in general the gains which had been made by the 1913 Coupe de l'Auto Peugeot in particular. Delage and the winning Mercedes were of particular interest in that they showed certain definite departures from the general acceptance, of Henri ideas. The former used valves at an included angle of 90 degrees, whereas the more general angle was 60 degrees, with Vauxhall only 18 degrees. Delage used positively closed valves, a scheme which was, however, not marked with success. Mercedes, using aero engine experience, employed a cylinder construction which was to have a marked effect on subsequent design. In the previous two races the use of four cylinders made from one iron casting including the head had become almost universal. The winning Mercedes went to the opposite extreme of having four separate cylinders attached to the crankcase and each one fabricated from a steel forging having one closed end in which the valve seats were bored. The ports were then made from steel sheet and welded on to the barrel, provision being made further for welding the guides into the ports. After this had been done a light steel water jacket was welded over the whole assembly with the addition of suitable connections for water flow between one cylinder and the other, and supports for the overhead camshaft. This construction, retrograde in that the overall stiffness of the engine was lowered by the use of individual cylinders, was markedly progressive in that complete control could be obtained over metal thickness and water brought very close to all the hot spots in the head with entire freedom from the possibility of the design being marred by errors in casting.

Progress in technique notwithstanding, the limit on engine capacity resulted in a definite reduction in total engine output, and the constructors estimate that the winning engine of 1914 developed 115 h.p., that is to say 25 h.p. less than their victorious model of 1908. Such lower powers were, however, offset by two noticeable changes in the design of the cars themselves. There was firstly a marked reduction in height, despite the fact that engine height remained virtually unchanged. By passing the rear springs beneath the rear axle instead of above it and by using a double drop in the frame, the height of the latter was reduced to 14¾ in. from the ground, and with a slightly lower seat this resulted in the driver's head coming just under 60 in. from ground level. The scuttle height was also a good deal reduced, leading in all to a reduction in area from between 18 and 19 sq. ft. for the 1908 cars to 13 sq. ft. for the 1914 types. This change is of greater magnitude than the reduction in h.p., so that we can put the power per sq. ft. of frontal area as follows :

1908 Mercedes 7.7 h.p. per sq. ft.
1914 Mercedes 8.85 h.p. per sq. ft.

The same general considerations apply to other makes.

An outstanding change was effected by a minority of the 1914 designs, and although it did not make the difference between victory and defeat, it transformed an important aspect of racing car design. Hitherto braking systems on racing cars had been restricted to the rear wheels only, although the brakes themselves were placed both adjacent to the rear hubs and on the transmission line. The possibility of braking on all four wheels had been the subject of discussion from a very early stage of design and was realised in practice by a number of cars such as the British Phoenix of 1908 and, more prominently, the Argyll of 1911, and Isotta Fraschini in 1910. In the 1912-13 period Louis Delage had much practical experience of front brakes on touring cars, which proved to him that the objections commonly voiced, that is to say the danger of locking the steering wheels on corners and excessive tyre wear, were not sustained, and that the system could safely be used on his 1914 racing cars. This came to the knowledge of Georges Boillot, who made some tests of the Argyll car with Perrot-type brakes during the London Motor Show of 1913. He made an enthusiastic report to Henri, but at this stage (November) it was too late to incorporate the Perrot system in the Peugeot design. This Company, therefore, adopted an alternative scheme developed by Isotta Fraschini and used by them on their 1910-11 racing cars in the U.S.A.

The principal differences between the two layouts were that in the Perrot system the camshaft for the front brakes was joined to an external shaft running above the front axle, which was pivoted on the frame and used two universal joints. It was thus possible for the axle to rise and fall, and for the wheels to run without disturbing the braking mechanism. In the Isotta system the whole of the shafting was fixed on to the axle and turning of the wheel was accommodated by a floating cam. These systems are illustrated in Example Nos. 6 and 9 respectively. Fiat and Piccard-Pictet also used brakes on all four wheels. Unfortunately, only Peugeot had sufficient power under the bonnet to keep within sight of the rear-braked Mercedes team and hence at a decisive point in the technical history of motor racing we are baffled in our endeavour to discover

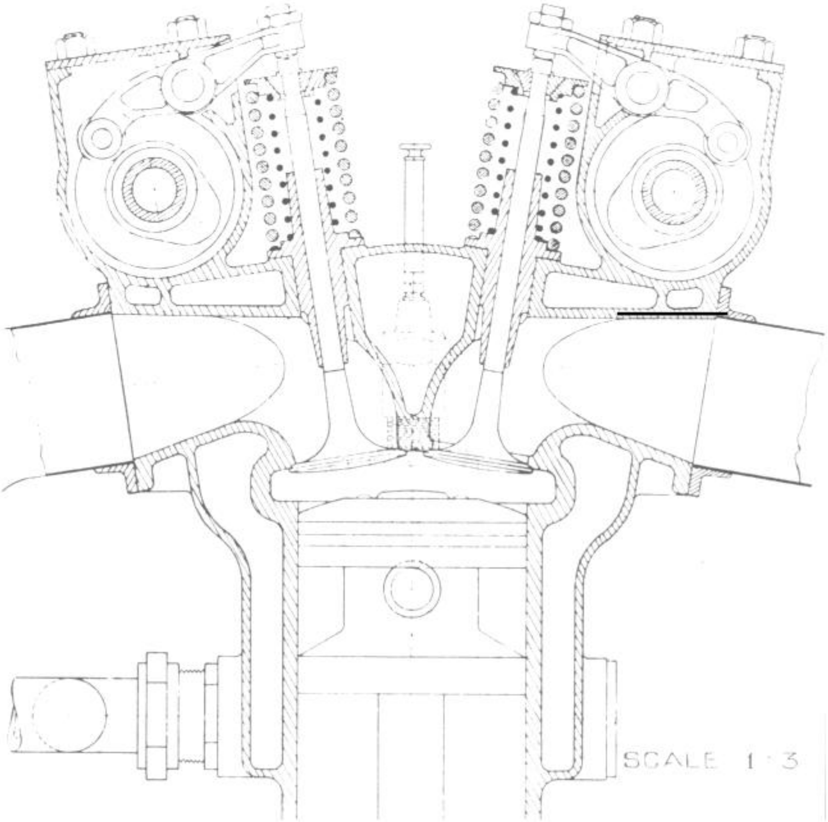

The 1914 G.P. Vauxhall engine. Scale I : 3.

the exact value of a revolutionary change. Observers on the course were all agreed that the Peugeot drivers had a very big advantage on corners. For example, speaking of a duel between Lautenschlager and Goux on a Peugeot, one writer says " Both went all out from the bend, tearing down to the village of Sept Chemins like a couple of speed demented monsters. Lautenschlager got there first-and then they were hidden from my view by the cottages. I put my glasses on the return road and it was a Peugeot model which first came into view ; I calculated, therefore, that the front-wheel brakes enabled Goux to catch up in the S-bend in the village." Despite this the Mercedes lap times were uniformly better than those of the Peugeot, and again referring to contemporary observation it was estimated that if the German cars had been front braked their times would have been reduced by 50 and 60 seconds a lap. This, purely a guess, was tantamount to saying that front brakes raised average speeds by 5 per cent without change in engine output.

CHAPTER NINE

The First Decade

STATISTICS OF RACING CARS 1906-1914

	1908 Itala	1910 Fiat	1912 Peugeot	1913 Peugeot	1914 Mercedes
Cylinders	4	4	4	4	4
Bore	155	130	110	78	93
Stroke	160	190	200	156	165
S/B Ratio	1.03	1.42	1.82	2.0	1.77
Cylinder Capacity	3,020	2,521	1,900	735	1,120.8
Engine Capacity	12,080	10,084	7,600	2,981	4,483
B.H.P.	100	120	130	90	115
R.P.M.	1,600	1,650	2,200	2,900	2,800
B.H.P. per Litre	8	10.1	17.1	30	25.6
B.M.E.P. lb./sq. in.	67	78	101	134	120
Piston Speed ft./min.	1,700	2,060	2,880	3,000	3,000
Inlet Valve Area sq. in.	44		28.4	14	21.5
H.P. per sq. in. Inlet Valve Area	2.28	2 %	4.58	6.43	5.4
Piston Area sq. in.	1'17	83	82	29.4	42
H.P. per sq. in Piston Area	0.85	1.45	1.59	3.06	2.73
Piston Area sq. in. per Litre	9.42	8.24	10.8	9.9	11.2
Induction System	Atm.	Atm.	Atm.	Atm.	Atm.
Available H.P.	115	120	130	90	115
Frontal Area per sq. ft.	18.5	18	16.2	14.5	13
H.P. per sq. ft.	6.2	6.8	8	6.2	8.9
Weight cwt.	27.8	28	22.5	16	21.5
Weight with Crew and Fuel	32.3	33	27.5	21	26.5
Engine Litres per Ton Laden	7.56	6	5.5	2.85	3.4
Engine B.H.P. per ton Laden	70	71	95	86	85
Maximum Road Speed m.p.h.	98	100	105	95	116

THE most pronounced feature in the map of the first ten years of motor racing is that maximum speeds rose by the order of 30 per cent and average lap speeds by 15 per cent, although engine size, whether measured by capacity or piston area, was diminished by two-thirds. Engine output was higher in the 1914 Grand Prix than it was in the 1906 event (a little below the peak figures realised in 1908 and 1912), and this proves that engine design made rapid strides, which is all the more interesting in that the number of cylinders was unchanged and ferrous material was used throughout for the constructional parts. In round figures, however, crankshaft revolutions were doubled, and piston speeds more than doubled, in this decade, and this could not have been achieved with reliable running without improved metals.

The use of alloy steels was a notable feature. Early engines relied on simple carbon steels for connecting rods and crankshafts, and on cast-iron for pistons. Valves, also, were made from straightforward materials with comparatively poor qualities at elevated temperatures.

In a paper read before the Institution of Automobile Engineers (Volume V, page 190), H. G. Burls stated that a reasonable estimate of reciprocating masses of an engine using cast-iron pistons was given by the formula :

$$M = 0.08d^3\ (1 + 0.15r) + 1.5\ \text{lb.}$$

in which M equals mass, d equals cylinder bore in inches, and r equals stroke/bore in inches.

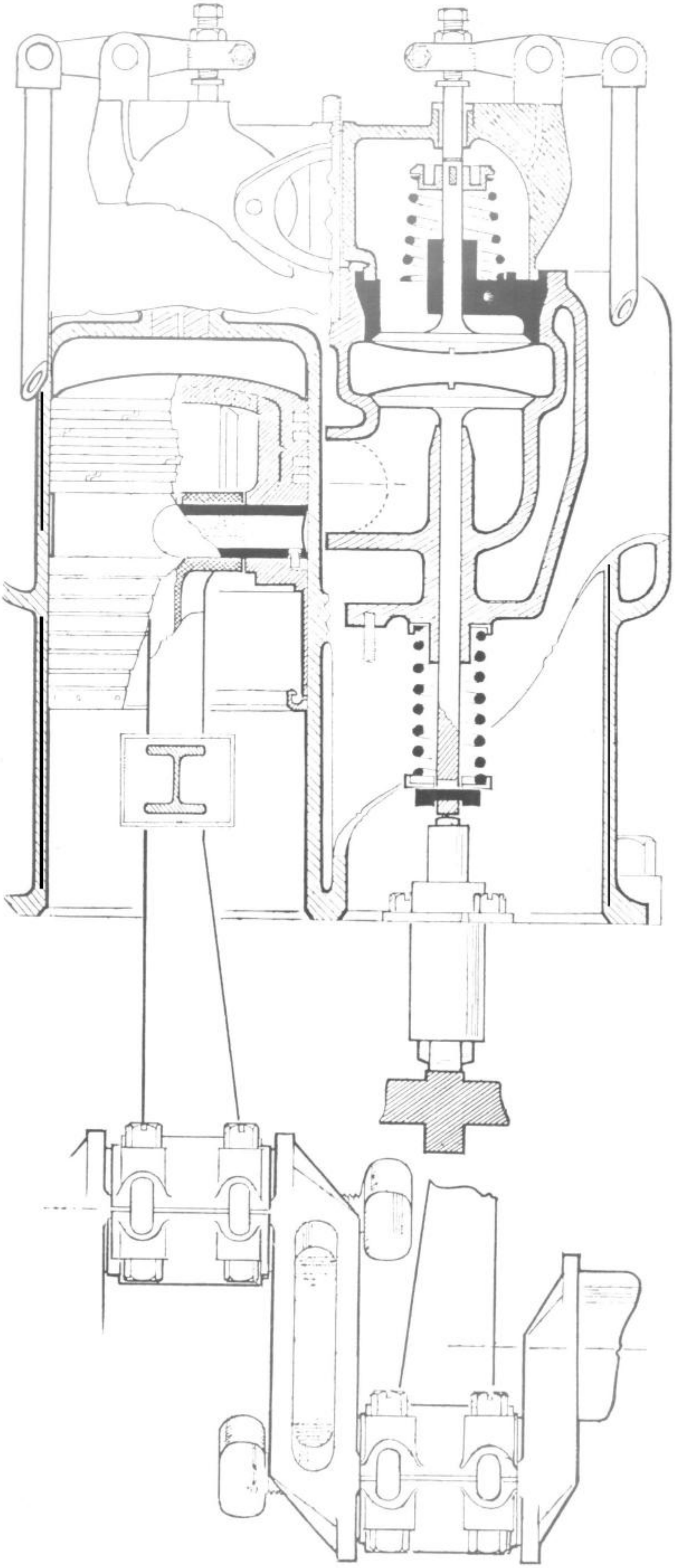

12-litre Engine
of the 1908 G.P.
Itala. Scale 1 : 4.

Taking as a typical case from a number of given examples in an engine with dimensions 130 x 140 mm., the calculated weight was 13.8 lb. and the scale weight 13.2 lb. ; equal to 0.66 lb. per sq. in. of piston area.

The first really high-piston-speed engine, the Peugeot, was also one of the first to employ BND special alloy steels developed by the great continental firm of Derhihon. In addition to being used for many chassis parts and for the crankshaft and connecting rod, this steel was also employed for the pistons which were, therefore, considerably lighter than the cast types hitherto employed. Improved valve steels were particularly necessary in view of the very large step-up in heat dissipated through the exhaust valve head and stem.

Lubrication, a further vital factor in the development of the high-speed engine, changed from the crude drip feed and splash systems, used in the earlier races, to fully forced feed through the crankcase bearings into the crankshaft, a special modification being utilised by Peugeot who circulated the oil through large tanks before bringing it back into the engine. Peugeot again were pioneers in the use of roller bearing main bearings which were copied by Sunbeam ; all the competitors used white metal big ends with thick bronze backing. Pure castor oil was used by most companies.

Compression ratios and brake mean effective pressures did not rise in the same degree as engine speed. Data on the compressions used on earlier cars is meagre but it was of the order of 4 : 1, whereas on the highly successful Peugeot design of 1913 it was 5.3 : 1.

A primary advance was made in gas flow through the valves, whereby it became possible to sustain the b.m.e.p. at high speeds. This was brought about by the obvious means of four valves per cylinder, giving greater valve area in relation to piston area ; less obviously by raising the lift of the valves, increasing their rate of opening, also lengthening the period during which they remained open. It was typical practice on the earlier types of racing car engines to open the inlet valve at top-dead-centre and even slightly after, and to close the exhaust valve at the same point.

Early aircraft engines were probably the first to use " overlap," but the use of this expedient on the 1912 Peugeot was still sufficiently novel to excite comment. However, by opening the inlet valve, say, 15 degrees before top-dead-centre and using a quick opening it will be evident that the total period of the stroke during which the valve was opened for useful work was very greatly increased. A comparison between the timings of the 1903 Mercedes and 1908 Itala and 19 14 Mercedes is of value.

	1903 Gordon *Bennett Mercedes*	1908 G.P. *Itala*	1914 G.P. *Mercedes*	
Inlet Opens	11°	12½°	0°	A.T.D.C.
Inlet Closes	11°	20°	35°	A.B.D.C.
Exhaust Opens ..	45°	42½°	50°	B.B.D.C.
Exhaust Closes ..	6°	0°	9°	A.T.D.C.

It should particularly be noted that in none of the foregoing examples was the inlet valve opened before top dead centre, the relatively small overlap being in every case secured solely by delaying the closure of the exhaust valve. As will be discussed in a later chapter, this practice was continued in the early 1920s.

1913-14 also witnessed the death-throes of any alternatives to the overhead poppet valve plus overhead camshaft mechanism for racing cars. The former year saw the last participation of side-valve engines, the latter the last serious use of sleeve valves, although it is only fair to add that the double sleeve, Knight, type was unsuccessfully employed during the 2-litre formula of 1922-5 and ran its last race in 1931.

There was little uniformity in the matter of drives to the overhead camshaft mechanism. Although a number of designers were influenced by the train of gears employed by Henri in 1913 and subsequently, there were also examples of shaft and bevel drives and (by Vauxhall) a shaft with a worm on the upper end, engaging with wheels at the end of the camshafts. Exposed valve springs and rockers were usual with the object of obtaining maximum cooling and accessibility for adjustment and/or valve spring renewal. The use of double valve springs to eliminate surge points became common.

Cooling was materially assisted by the universal acceptance of the integral cylinder head which permitted good water flow around the valve seats, as shown in a number of sections reproduced on various pages of this book. It is of interest that although Gobron Brillie used alcohol fuel mixture in their remarkably successful record-breaking cars in the 1903-7 period, their lead was not followed in Grand Prix racing, and until 1914 all engines ran on straight commercial petrol, supplied by the organisers, and the potential advantages of alcohol in respect of higher permissible compression and internal cooling were neither appreciated nor utilised. Petroleum technology was, however, as yet in the embryo stage, and it was not until the beginning of the second decade of Grand Prix history that fuels were consciously related to engine design.

The fixed choke type of carburetter with barrel throttle, of which Claudel was the chief exponent, was generally used throughout the whole of the period now reviewed, and a single instrument running into a wide branch manifold was normal practice. Fuel feed from the rear tank was by air pressure of 2-3 lb. above atmosphere, this usually being supplied from a hand pump worked by the riding mechanic, although on some early cars exhaust gas pressure was used.

The rotating and reciprocating parts of the 1906-14 engines appear decidedly undersized by modern standards, but there was, as the years went on, a definite trend towards increasing their proportions in relation to piston area and cubic capacity. But analysis of torsional resonance was in its infancy and designers were still calculating crank sizes and gudgeon pin diameters on the basis of required strength to avoid breakage rather than required stiffness to avoid deflection. The stresses were, however, kept well within reasonable limits, as proved by the extreme length of life in these engines, a number of which are still in being and reproducing their designed performance nearly 50 years after their original construction date.

Although in the early stages of Grand Prix car design the multi-plate clutch was most commonly used, the cone type achieved considerable popularity in later years and had the merit of simplicity and inherent freedom from slip. The rotating mass was substantially greater than with the plate type which led Mercedes to use the double cone mechanism described in Example No. 5.

After 1907 not less than four forward speeds came to be accepted as the minimum, with Delage in 1913 initiating the five-speed gearbox with the higher ratio indirect

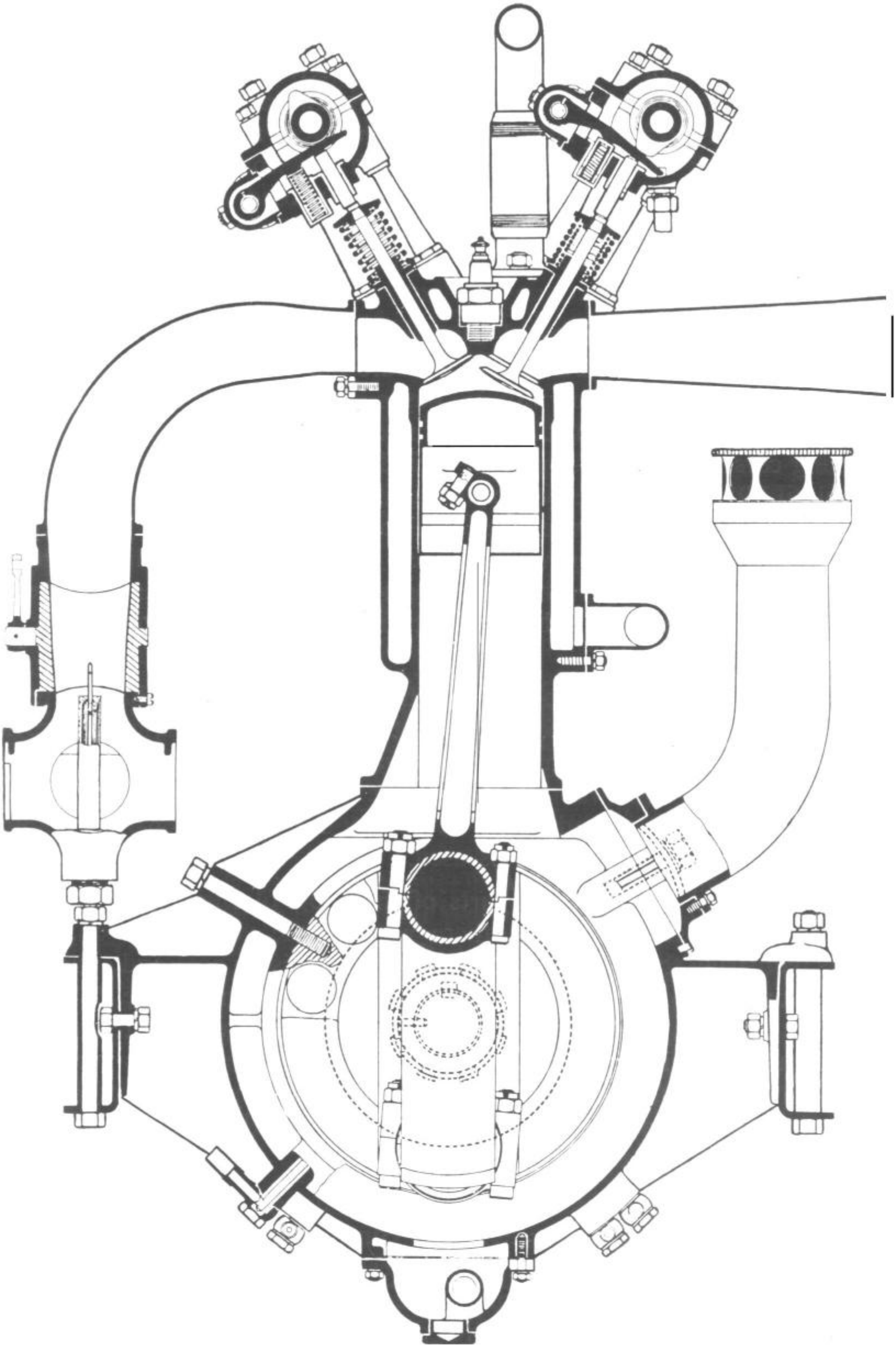

The 1913, 3 litre, Coupe de l'Auto, Peugeot. Scale I : 4.

and geared up. Fiat, in 1914, built the engine and gearbox in a combined unit (joined through a cast bell housing around the clutch), but all the other cars mounted the box separately on the frame with a foot-operated brake working through the transmission.

In the first four Grands Prix no clear-cut superiority was evinced either by chain or propeller shaft drive, but after continuing with chains in 1913 the Mercedes Company chose the live axle for their 1914 models, and in this they were joined by all other constructors. In this matter, as in so many others, the successful Peugeot of 1912 undoubtedly set a fashion, as it did also in the use of a double-jointed propeller shaft, the drive reaction being taken through semi-elliptic rear springs. Suspension and steering layouts changed scarcely at all, although in order to lower the whole car, there was a general move from 1912-14 towards underslinging the rear springs and in some cases using a double drop frame.

The frames themselves continued to be simple, light constructions of channel steel with a maximum depth of 3 in., but the immense additional stiffness provided, in most cases, by four-point engine mountings at the front, plus four-point gearbox mountings in the centre, should not be considered forgotten. Peugeot represented an opposing school of design which sought to immunise the engine from the effect of chassis distortion by locating it in a three-point mounted sub-frame.

From 1908-14 lowering the height of the top-most portion of the body led to a useful reduction in frontal area. No great effort was made to reduce drag on road racing cars by improved body shape.

In 1914, as in 1906, the typical body consisted of two seats, a rear petrol tank and two spare wheels placed athwart at the back of the car. This, of course, was the simplest and lightest structure, and it was generally held that any possible gain in maximum speed by using a long tail would be offset by impaired handling caused by weight behind the rear wheels and the difficulty of accommodating the spare wheels. Sunbeam used long bodies in 1912 but abandoned them in 1914, but in this year Peugeot and Fiat both used bodies with well-formed tails, the former enclosing two spare wheels in the main structure.

It is generally true that the drag on road-racing cars is not materially affected by changes in shape, but this major modification was undoubtedly worth many m.p.h. ; in fact, Brooklands experience has shown that a gain in speed of up to 10 m.p.h. can be obtained with no change in engine output. It is, therefore, not surprising that this development permanently affected the external appearance of future cars as, of course did the mechanical change introduced *inter alia* by Peugeot and Delage in the shape of brakes on all four wheels.

There was little variation in either dry or running weight between 1906 and 1914 due, of course, to the fact that the regulations in 1906, ‘8, ‘13 and ‘14 prescribed maximum and minimum weights of between 15.7 and 22.6 cwt. For this reason, the h.p. per ton available on the 1914 cars was rather less than that obtained in 1908, the 1912 models representing the peak in this aspect of performance.

In sum the first decade of Grand Prix car design may be considered a period in which engine output rose as a consequence of higher crankshaft r.p.m. and piston velocity, chassis design changed comparatively little and body design scarcely at all. Maximum speeds, however, rose by an average of 5 per cent per racing year and circuit speeds by between 2 and 2½ per cent per racing year.

CHAPTER TEN

Out of the Chrysalis

WORLD WAR I virtually put an end to the design and construction of Grand Prix cars from 1914-8, and when development went forward again in 1919 it was powerfully influenced by aero-engine practice. Once more, however, it was Henri who dominated the intellectual world of the racing automobile, and his post-war products set fashions no less firmly than did his design work in 1912-13. This, in particular, is true in respect of development of the eight-cylinder in-line engine, a type which, in principle, dates back to the earliest days of motoring.

The C.G.V. of 1902 preceded the six-cylinder type and in the 1907 French Grand Prix three makers entered straight eights : Weigel, Porthos and Dufaux.

Nevertheless, when war broke out in 1914 four-cylinder engines had proved overwhelmingly successful for racing cars, only one event, 1911 Indianapolis (six-cylinder Marmon), having been won with a power unit with more than this number of cylinders. It is, therefore, somewhat remarkable that when war was declared again, in 1939, a four-cylinder engine had not won a major race for over seventeen years and with two exceptions (the six-cylinder 2-litre Fiat and Sunbeam) all successful designs had eight cylinders or more. The vast majority had been straight eights.

This change over to multi-cylinder engines in general, and the straight eight in particular, did not come about gradually. It was wrought metaphorically overnight, literally, in two years 1919 and 1920. Hence, whereas in the 1914 French Grand Prix there were no straight eights entered and four-cylinder engines constituted 93 per cent of the entry and 100 per cent of the finishers ; in the next race run in 1921 only two of the starters had four-cylinder engines and all the others were of the straight-eight type. Similarly, at Indianapolis we find that eight-cylinder, in-line engines constituted 13 per cent of the entries in 1919, 25 per cent in 1920 and 56 per cent in 1921.

This remarkable change in racing car design derives from a chain of events which brought together Henri and Ettore Bugatti.

The Peugeots designed by the former have already been the subject of considerable comment and there can be little doubt that following his great successes in 1912 and 1913 this engineer was disquieted, to say the least, at having his designs beaten in the great race of the 1914 Grand Prix, and was determined to have a winner when racing resumed. He realised that this would be delayed in Europe, but Indianapolis was kept alive in the U.S.A. until 1916, and this encouraged Henri to have a design ready for immediate use. He had, however, by then severed his connection with Peugeot and was working for a company called Bara at Levallois in France.

Now to come to the interesting influence of Ettore Bugatti.

From 1910 to 1914 this highly original thinker was working in a very small way, producing two types of four-cylinder cars of widely differing size at Molsheim, then in Germany. One was the progenitor of the four-cylinder, high output, Voiturette, having a bore and stroke of 68 x 100 mm., giving a capacity of under 1½ litres, but utilising such modern features as an overhead camshaft operating two vertical valves per cylinder.

The other was a similar unit, having a rather different valve gear, incorporating three valves per cylinder, two inlet and one exhaust, but much larger in bore and stroke. A modification of this production type was entered for the 1914 Indianapolis Race and had dimensions of 110 x 160 mm., giving a capacity of approximately 6.25 litres.

In 1911 Bugatti built a straight-eight single-seater racing car with an engine made up of two four-cylinder units (65 x 100 mm.) mounted upon, and running in, a special crankcase and in this year one of these, driven by Friderich, won a hill climb which was probably the first competition success for this type of engine. In 1913-4 Bugatti built a second version of this engine with 68 mm. bore cylinders and thus had a very simply produced straight-eight 3-litre which was kept on the road until well after 1920.

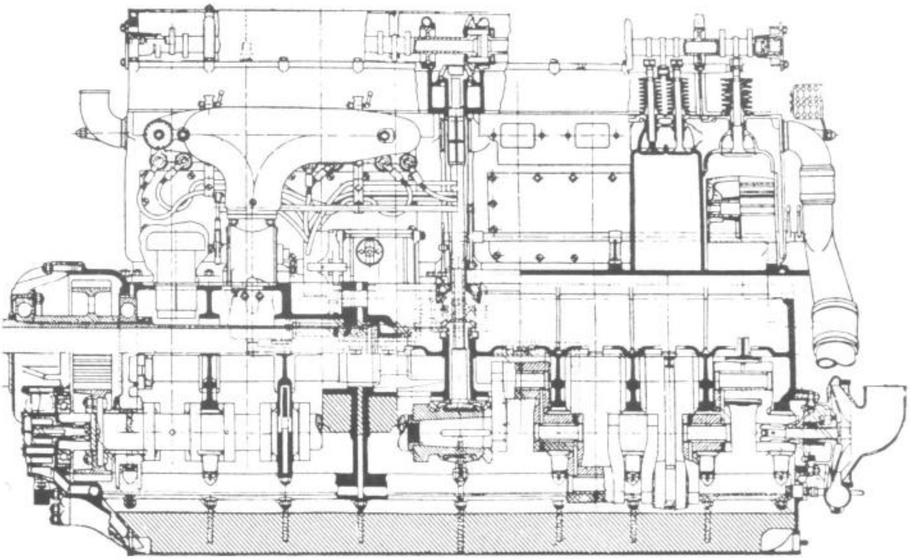

The straight-eight, 12.5-litre Bugatti aero engine built in 1915

The outbreak of the 1914 war prevented development and Bugatti went to France and was asked to design an aero engine. This he did by coupling two Indianapolis four-cylinder engines together on a common crankcase with a camshaft drive in the centre, as shown in a drawing. This engine was built very quickly, and in 1915 it went through a fifty-hour-type test, developing 205 b.h.p. An interesting feature of the design that can be seen is the manner in which the two crankshafts are placed at right-angles (to give a 4-4 firing order) and connected by a taper and key in the centre. This construction gave space for a vertical drive to the camshaft between the front and rear cylinder blocks, a concept that has been followed on many subsequent Bugatti car engines.

It was soon decided that an exceptionally powerful aero engine could be made by placing two of these straight eights side by side, making a " sixteen " with geared crankshafts. The engine developed rather over 400 b.h.p. at 2,000 r.p.m. In 1917 production was put in hand by the Duesenberg Motor Co., in Chicago, and, be it noted, by Bara in France.

Henri thus had very forcibly brought to his notice a straight eight in being, and quickly decided that this was the answer to his problem ; and that his next design should also be a straight eight.

During the war he thought out the engine which was later used in the Indianapolis Ballot cars which, it may be remembered, were constructed in the astonishingly short time of 101 days. With a bore and stroke of 74 x 140 mm. these cars had a capacity of 4.9 litres and were much the fastest on the track. This was shown by the way in which René Thomas easily broke the lap record. In 1914 Georges Boillot on one of the 5.6-litre 1913 four-cylinder Peugeots had made a tremendous effort to reach 100 m.p.h. for a lap but had just failed to do so. Thomas on a brand-new car which had had very little preparation immediately put up a speed of 104.7 m.p.h.

Duesenberg also continued under the Bugatti influence with an engine which was an interesting combination of American and European design practice. In common with the former the crankcase and cylinder block were one casting with a detachable cylinder head. In common with the latter, and Bugatti in particular, it retained three valves worked by a single camshaft. Whereas, however, Bugatti used three cams per cylinder on the Duesenberg the layout was simplified by using a forked rocker for the exhaust valves. The crankshaft, again like Bugatti, was of the 4-4 type.

The general benefits accruing from the use of the multi-cylinder principle have been the subject of a number of papers to learned Societies. A particularly able contribution was made by E. W. Sisman ; " The Straight-Eight Engine " read before the Institution of Automobile Engineers (Vol. XXI). In this he showed that if stroke : bore ratio, compression ratio, and connecting-rod length to crank-radius ratio were kept constant, there were very large advantages to be derived from changing from the four-cylinder engine of 85 x 132 mm. to an eight-cylinder of 65 x 105 mm. At 3,500 r.p.m. the inertia forces would be halved and the maximum explosion load transmitted to the big end reduced by one-third as a consequence of the smaller area of each individual piston. Piston speed at constant r.p.m. would be reduced by 20 per cent and total piston area would rise by 28 per cent.

From these figures it is apparent that increasing the number of cylinders offers much reduced stresses with greater reliability at the same engine speed ; alternatively there is the possibility of raising r.p.m. by 25 per cent without changing maximum piston speed.

When designing the 4.9-litre Ballot, Henri made practically no departure from the proportions which he had established on his 1914 car, and he retained practically identical ratio of engine to road speed, giving 2,600 r.p.m. at 100 m.p.h., the piston speed being reduced from 2,740 to 2,400 f.p.m. It is, therefore, apparent that the stressing on the Ballot engine was substantially lower at a given road speed ; it is also fair to assume the car was faster. Indeed, it is quite possible that under favourable conditions the Ballot engine would run up to 3,000 r.p.m. in top gear, whereas it is unlikely that the Peugeot often exceeded 2,800 r.p.m. The maximum piston speed of the two cars was, therefore, 2,960 f.p.m. and 2,880 f.p.m. respectively. It is thus apparent that Henri compromised between lower stress and increased power-output and worked in the continued belief that 3,000 r.p.m. was the limit for crankshaft speed.

The disappointing results (fourth and tenth) obtained at Indianapolis in the first and only appearance in major racing of this newly designed car might have suggested that it was best to continue on the old lines with four-cylinder engines, but although the 1919 race might have appeared inconclusive to the layman, engineers were convinced that a new era in design had commenced. Both Europe and America became definitely eight-cylinder minded.

The next big race was the Indianapolis of 1920. For this year the maximum piston displacement was 3 litres and entirely new cars, therefore, had to be designed. Seven eight-cylinder cars were entered, three by Ballot and four by Duesenberg. All the Ballots and three of the Duesenbergs finished within the first ten, and but for accidents an eight-cylinder engine would certainly have won.

Both the Ballots and Duesenbergs were scaled-down versions of the previous year's 5-litre cars, the bore and stroke being 65 x 112 mm. and of 63.5 x 117.5 mm. respectively. The makers' claims were 90 b.h.p. for the Duesenberg and 108 b.h.p. for the Ballot, but in view of their remarkably similar performance the true figures may well lie more closely together.

The 1920 3-litre Ballot was similar to its bigger predecessor but two significant technical changes should be noted. The stroke : bore ratio was reduced to 1.72 : 1 and whereas the big car had followed 1913 body design with a square tail, the small one followed on the lines of the 1914 Peugeot with a long tail body. The rear axle gave a direct drive of 3,150 r.p.m. at 100 m.p.h. and a piston speed of only 2,320 ft./min. at this speed, a fact which permits us to make an interesting comparison between Henri's 3-litre capacity concepts in 1913 and 1920.

A 112 mm. stroke gave the designer a neglected opportunity to put the peak of the horsepower curve at 4,000 r.p.m. without exceeding the 3,000 ft./min. piston speed which had been reached on his 1913 car ; allowing for the further experience of seven years one might suppose that piston speed could be safely raised by, say, 10 per cent, bringing the maximum engine speed up to 4,400 r.p.m. and raising the peak power to approximately 125 b.h.p. but although r.p.m. were increased by 30 per cent. piston speed was reduced.

Henri's hereditary distrust of high r.p.m. was, however, more than justified, since the 3-litre Ballot could never be run to the peak of the power curve for prolonged periods without mechanical disaster. This was undoubtedly due to the combination of a somewhat primitive lubrication system with definitely inferior design of the big end. The former provided dry sump lubrication with only one pump, but considerably limited the pressure at which oil could be supplied, whilst in the design of the big end Henri fell into the double error of offsetting the centre-line of the rod in relation to the centre-line of the crankpin and using a floating bush within the eye of the rod. It has since been shown that the extra overhang area obtained by offsetting is virtually useless, and also that despite having the *prima facie* virtue of reducing the pressure x velocity factor a floating bush has about half the load-carrying capacity of a fixed bearing (*vide* The Load Carrying Capacity of Journal Bearings by J. M. Stone and A. F. Underwood, S.A.E. *Journal,* Vol. I, No. 1, 1947). If we add to these errors a somewhat ill-chosen section for the rod we have ample explanation that the usable maxima of this engine was only 3,500 r.p.m., at which we may assume it developed approximately 100 b.h.p. Thus the dividend paid by the additional complications of the eight-cylinder engine amounted to only 10 per cent on continuous rating compared to Henri's 1913 3-litre despite an increase in piston area of 37 per cent. In short, Henri sowed but did not reap so far as the eight-cylinder in-line engine was concerned.

The principle was used to better advantage by others, notably Duesenberg and Fiat. Both of these power units followed the long stroke theme, but they ran reliably at high r.p.m. and piston speeds, largely as a result of detailed refinements in mechanical construction and lubrication. One must refer immediately to the fact that all the post World War I 3-litre cars used light alloy, in place of iron or steel, pistons.

The Burls' equation referred to in Chapter 18 would assign a total reciprocating weight of approximately 2.7 lb. for a car of 65 mm. bore, whereas the weight of the Ballot connecting rod and piston amounted to only 1.03 lb. or 0.22 lb. per sq. in. The Duesenberg also used extremely light tubular connecting rods and it had in addition pistons of unusually thin section, the total weight of the connecting rod and piston amounting to only 1.15 lb. (0.234 lb. per sq. in.). This was slightly heavier than the Ballot, but the Duesenberg engine was thoroughly reliable ; the Ballot was not. Much of this difference was probably due to the direct babitting of the white metal into the Duesenberg rods with a coating only 1/32 in. thick. By this means heat transfer from the surface of the bearing to the rod was considerably improved, and resistance to cracking substantially raised compared to the extremely thick linings of white metal which were then current practice. Fiat developed the use of roller bearings so that they could be employed for both main and big ends with a solid crankpin. This arrangement, as mentioned earlier in the book, involved splitting the bearing cages of the housings and, in the case of the big ends, using hardened tracks in the eye of the rod itself.

Fiat also carried further the Mercedes scheme of welded steel cylinders, using this arrangement in two blocks of four each having a common water jacket. Both Duesenberg and Fiat (which developed greater power than the Ballot) did so with one inlet valve per cylinder.

The figures for h.p. per square inch of valve area prove that the flow values through the ports was considerably greater per unit of area with a single valve per cylinder than with two, although Ricardo showed what careful design could achieve on the two-inlet valve head of the Vauxhall. Mechanically, the engine of the Duesenberg, which won the French Grand Prix of 1921, showed much of interest, including three-bearing crankshaft, plain big ends, tubular connecting rods, crankcase and cylinder block cast in one, and a detachable cylinder head with one inlet and two exhaust valves operated from a single camshaft. The inclined angle between the valves was approximately 50 degrees, and the drive from crank to camshaft by bevel gears and vertical shaft in the front of the engine.

The Fiat, on the other hand, had a ten-bearing crankshaft, roller-bearing big ends, welded cylinder construction and the valves inclined at an angle of 96 degrees. This naturally gave two widely separated camshafts, which were driven by a train of gears from the rear of the engine.

The Vauxhall 3-litre engine, designed by Dr. H. R. Ricardo, was never used in a Grand Prix event, but by reason of the great technical merit of the design it is worth comparing with its contemporaries. The excellent results were obtained in spite of the limitations on piston area which the four-cylinder principle made inevitable. As on the Fiat the crankshaft was a full roller-bearing type, but Ricardo chose the alternative of a built-up shaft and one-piece connecting rods. The design and performance of this engine are considered in Example No. 7, Volume I, but it is particularly relevant in this analysis to note that the weight of the reciprocating parts was held

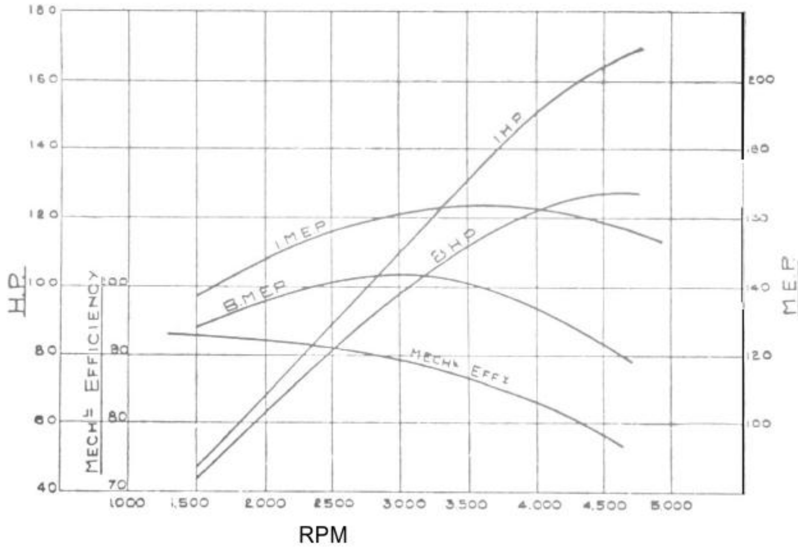

These curves show the very high b.m.e.p. and mechanical efficiency that were obtained on the 1922 Ricardo-designed 3-litre Vauxhall engine.

down to 1.7 lb. per cylinder, or 0.195 lb. per sq. in. of piston area, which is a good deal lower than the figure obtained on the Ballot and Duesenberg, although both these engines had the advantage of plain bearing big ends.

Reference to the data table shows that the Vauxhall engine operated at 4,000 ft. per min. piston speed ; a substantially higher figure than anything hitherto realised, and one which was, in fact, never exceeded during the subsequent history of racing car engines. This in itself is adequate testimony to the high efficiency realised by Ricardo in what must remain one of the finest manifestations of the automobile engineer's art.

In view of the decline of a four-valve head in subsequent years it is particularly interesting to compare the flow values of the Vauxhall engine both with the similar four-valve Ballot and the two-valve per cylinder Duesenberg and Fiat.

The figures given in the table show clearly how the Vauxhall valve gear maintained efficiency at high piston speeds ; less clearly the relative merits at equivalent piston speeds. If we fix the Vauxhall power curve at a point where the piston speed is equal to the peak figure on the Ballot, i.e. 3,250 r.p.m., we get the following facts :

Engine	*H.P./sq. in. Piston Area*	*B.M.E.P.*	*H.P./sq. in. Valve Area'*
Eight-cylinder Ballot	2.65 (100)	120 (100)	7 (100)
Four-cylinder Vauxhall ..	3.0 (113)	140 (117)	7.9 (113)

Taking the comparison further with the Duesenberg (of which we have equally reliable data) we have at 3,800 r.p.m. on the Vauxhall :

Engine	*H.P./sq. in. Piston Area*	*B.M.E.P.*	*H.P./sq. in. Valve Area*
Eight-cylinder Duesenberg ..	2.93 (100)	113 (100)	9.6 (100)
Four-cylinder Vauxhall ..	3.4 (116)	127 (113)	8.95 (93)

These figures show that the port efficiency on the Ricardo-designed Vauxhall was considerably higher than on the Henri-designed Ballot. It was, in turn, somewhat lower than on the Duesenberg which had only a single inlet valve, but the greater valve area available on the British car gave it a marked superiority in b.m.e.p. and h.p. per sq. in. thus proving that the greater absolute efficiency of a single port could only lead to improved results if it were joined by very large valves and port areas.

The outstanding fact about the immediately post 1914-18 War 3-litre engines was, however, that the highest output of all was secured by a four-cylinder and not by an eight-cylinder engine, despite the many theoretical advantages of the latter.

This example of what can be almost laid down as a law of automobile design : " The first concept of superior principle is always defeated by the perfected example of established practice." Thus, the 1914 Grand Prix cars, with four-wheel brakes, were defeated by rear-wheel brake cars in the first contest between them, and the 1919 eight-cylinder Ballot was defeated by the 1914 four-cylinder Peugeot, designed by the same man. In later years, the supercharged engine and independent suspension, were in turn to be defeated on their first appearance. The preliminary setback overcome, we observe that by 1921 the straight-eight engine was firmly established, and although stroke : bore ratio had fallen somewhat from 1914 figures they still remained much above 1908 practice, so that an engine with a ratio of 1.5 : 1 was regarded as a short-stroke type. Nevertheless, there were many minor signs of a break from the almost slavish copying of Henri technique which had been prevalent since 1913. Duesenberg and Vauxhall, for instance, used detachable cylinder heads, Fiats were using wide angle valves and forged steel cylinder blocks, and maximum engine speeds were rising considerably above the limits which Henri imposed upon his products.

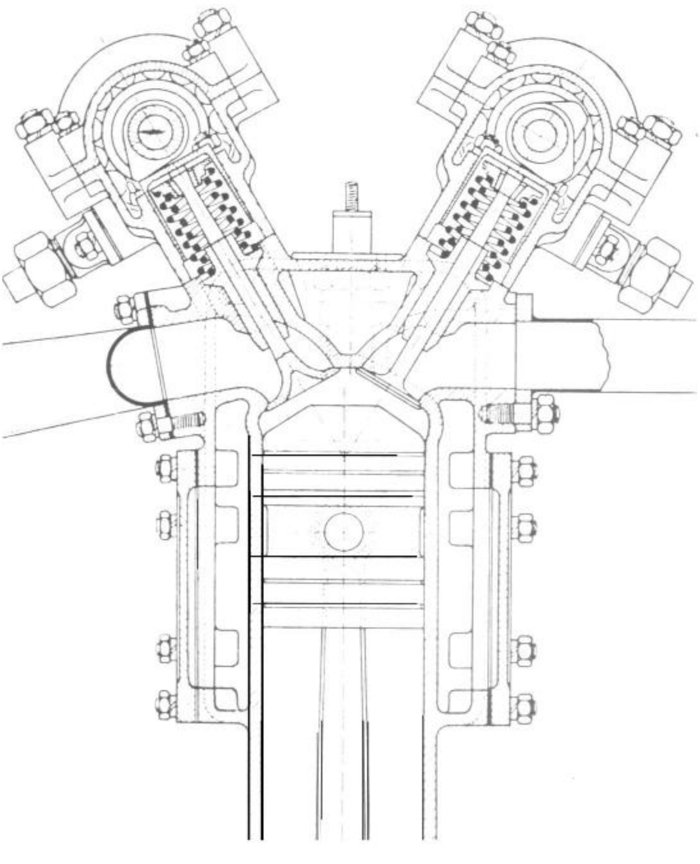

This cross section (Scale 1 : 3) of the 1922 G.P. Aston Martin engine shows the typical four valve per cylinder layout popularised by Henri on the immediate post 1918 racing cars.

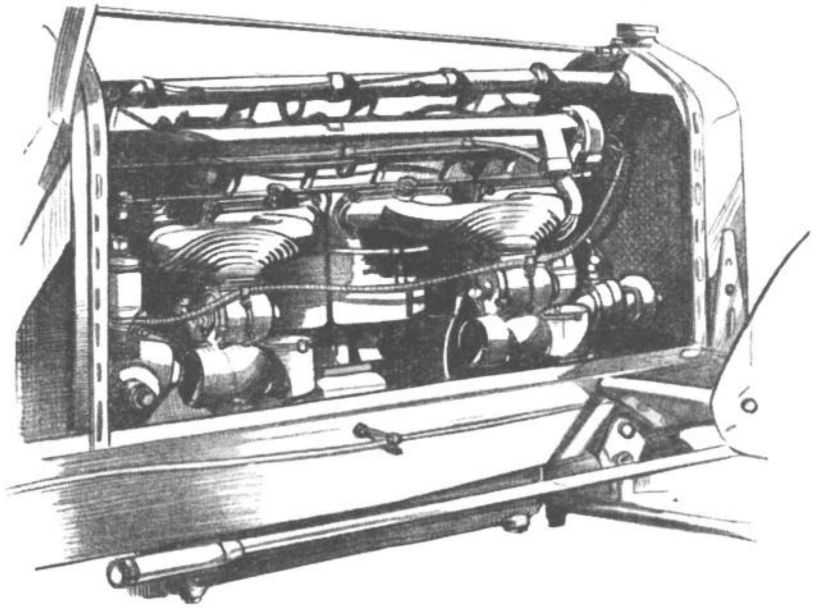

Left.-The first racing car to have a straight-eight engine was the Henri-designed Ballot of 4.9~litres capacity entered for the 1919 Indianapolis Race. It was easily the fastest car. Although unsuccessful owing to trouble with wheels, it set a lead for the straight-eight which has since been followed in the majority of racing power units.

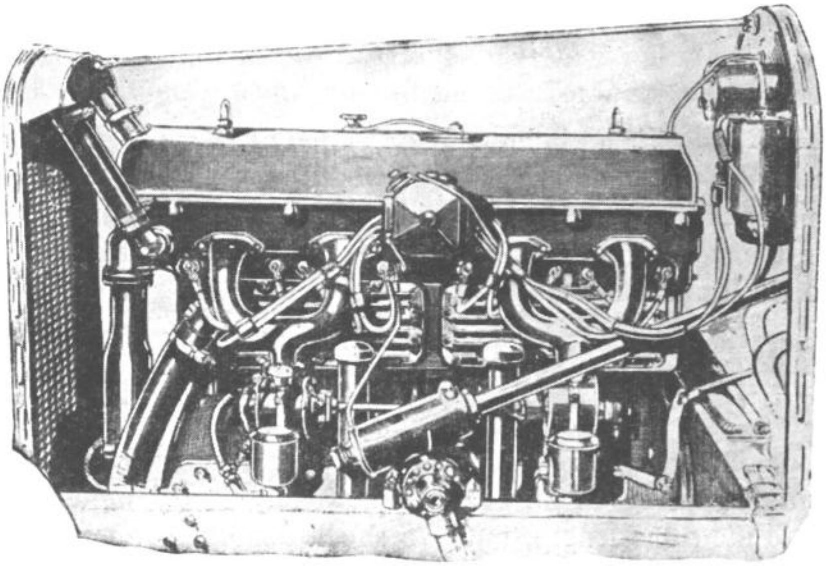

Right.-In 1921 the eight-cylinder in-line engine received the seals of success, winning the Indianapolis Race in America and the French Grand Prix. The American Duesenberg Corporation, which had built the Bugatti aero engine in the previous war years, provided the winner for the latter event, and the induction side of the engine is shown in this drawing.

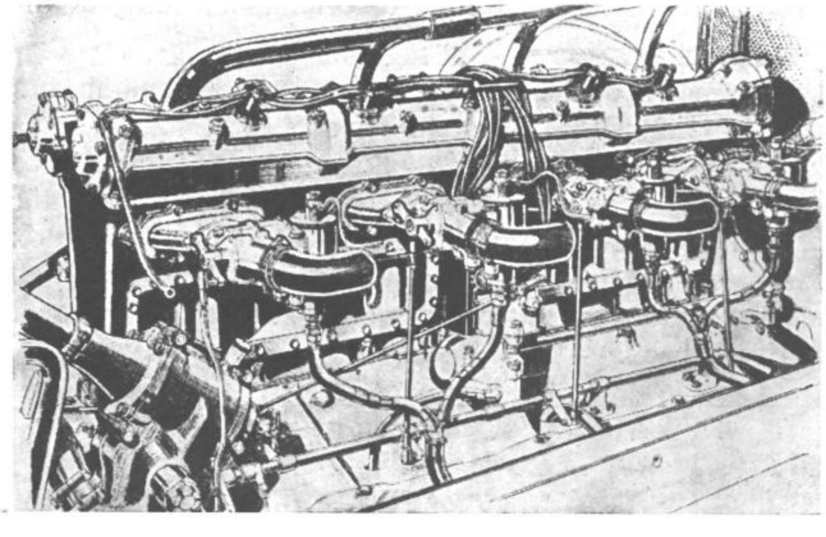

Left.-One of the few English straight-eight racing cars was the 1921 Sunbeam that ran in the Indianapolis and the French Grand Prix races that year, although without great success. The drawing shows its general similarity to the Ballot design, although the manifolding and many other details are quite different.

So far as chassis design is concerned, the 1919 to 1921 period does not display any considerable novelty. The successful use of front-wheel brakes in 1914 naturally led to these components being standardised on the cars of the post-war era. In this field Perrot was responsible for most of the equipment, with Birkigt designing an ingenious servo mechanism which would give a high unit pressure on the brake shoes with reasonably light pedal pressure, despite the mass of mechanically inefficient compensating mechanism which usually existed between the pedal and the brake drum.

There was a further factor which biased designers in favour of servo assistance on the brake pedal. At this stage in the history of automobilism, brake linings had relatively poor resistance to wear, and to fade at high temperatures. By reason of the latter defect high surface pressures were required, and by reason of the former the leverage between the pedal and the shoe had to be kept to a minimum so that slight wear on the lining would not be translated into a very large loss of useful travel on the pedal, leading in turn to the imperative need for " taking up " the brake rods or cables. The servo mechanism made it possible to combine relatively small mechanical advantage with high shoe pressure and low pedal pressure.

Duesenberg provided the first example of successful hydraulic brakes in racing. The brake shoes themselves were made from a flexible strip of metal with multiple segments of lining attached thereto. Although this arrangement did not become popular they were undoubtedly efficient.

Fiat had an interesting combination of mechanical brakes assisted by a hydraulic servo motor. The use of compressed air braking on the 3-litre Vauxhall was unique and cannot properly be considered as servo assistance as it was controlled by a lever on the steering column. Alternatively, pedal and hand levers could apply direct effort to the brake shoes.

Semi-elliptic springs with friction shock absorbers were standard at the four corners of the chassis.

The effect of greater unsprung mass on suspension was, however, becoming apparent. A typical 1907 racing car had front springs measuring 35 in. between centres and rear springs 39 in. with comparatively light damping. On the 1921 Ballot the leaves were the same length, but two shock absorbers were fitted to each spring so that the damping was very materially increased.

The relative merits of Hotchkiss drive and torque tube remained fairly evenly balanced in designers' minds.

So far as body designs are concerned, the 1919 Ballot (and the 1921 Sunbeams which were derived from it) had square tails, but some other cars were notable for a real effort towards streamlined form. The Duesenbergs, particularly, possibly due to their track racing traditions, had really beautiful lines. A typical body width at the largest section can be taken as 32 in., i.e., about 5 in. less than that of the Grand Prix cars of 1914. Despite this it was possible to have both the driver and mechanic well enclosed by staggering the seats and putting the latter back about 4 in. so that he could put his right arm behind the driver's back.

CHAPTER ELEVEN

End of a Theme

WE have seen how the general proportions of racing car engines became almost standardised between 1913 and 1921 under the influence of the highly successful work of Henri. Engines designed by him or his disciples had the following characteristics :

(1) A stroke : bore ratio of between 1.7 and 2 : 1 giving a compact combustion space with good thermal efficiency.

(2) Four valves per cylinder inclined at approximately 60 degrees, giving a high ratio of inlet valve to piston area. Each row of valves was operated by its own camshaft and the sparking plug was fitted centrally between valve seats.

(3) A barrel-type crankcase in which the built-up crankshaft ran on roller main bearings with plain big-end bearings.

(4) A limit of approximately 3,500 revolutions per minute.

(5) From 1913 onwards, a steady diminution at piston speed, brought about by the use of eight cylinders and reduced absolute stroke, despite the continued large stroke : bore ratio. To be specific the 1913 four-cylinder, 3-litre Peugeot engine had a stroke of 156 mm., and a piston speed of approximately 3,000 ft./min. at 2,900 r.p.m. ; the 1920-l eight-cylinder, 3-litre Ballot engine had a stroke of 112 mm. and a piston speed of 2,600 ft./mm at 3,500 r.p.m.,

A 2-litre, eight-cylinder, four valve per cylinder, engine, with a typical Henri stroke : bore relationship of 1.8 : 1 would have had a bore and stroke of 51 x 92 mm., and the valve diameter would be reduced to approximately 20 mm. Assuming 5 mm. to be the minimum diameter of valve stem there would be a severe friction loss through the ports, and at the established piston speed of 3,000 f.p.m. the crankshaft would be turning at 5,000 r.p.m. Hence, in 1922, Henri had to do one of two things, reduce the stroke: bore ratio and raise r.p.m. for the multi-cylinder engine, or maintain his tenets and meet the 2-litre formula with a four-cylinder engine. In designing the 1922 Sunbeam car he chose the latter course and used a four-cylinder engine, 68 x 136 mm., which followed precisely along the lines of previous designs.

Henri was additionally, if indirectly, represented by two other entries in the 1922 French Grand Prix–the four-cylinder, 2-litre Ballots, and the 1½-litre, four-cylinder, Aston Martins. The former engines had been designed by him in 1920 and one of them had finished third in the 1921 French Grand Prix, despite the handicap imposed by competing against 3-litre cars. These engines had a bore and stroke of 69.9 x 130 mm. (1.86 : 1) and the only departure from Henri's conventional layout was the drive to the camshafts, which was by a vertical shaft and bevel gears in place of the usual train of spur wheels.

The engines used in the Aston Martin cars were actually designed (so far as the cylinder block and head are concerned) by Gremillon, a member of the Peugeot drawing office, the work being commissioned by Count Louis Zborowski and carried out under the supervision of Captain Clive Gallop. By courtesy of the last named it is possible to reproduce drawings of this engine, which show that the designer had drunk deeply from the waters of the Henri stream, indeed, the similarity between this engine and Henri's eight-cylinder Ballot is particularly noticeable, not only in respect of having identical bore and stroke (which was fortuitous), but also in the layout of valve gear, sparking plug position, and so on. The valve timing, moreover, was precisely as used In the Peugeot engines of 1913-4, being :

Inlet opens 3 degrees A.T.D.C. Inlet closes 40 degrees A.B.D.C.
Exhaust opens 56 degrees B.B.D.C. Exhaust closes 12 degrees A.T.D.C.

The piston areas for the three makes inspired by Henri were Aston Martin 20.6 sq. in., Sunbeam 22.5 sq. in. and Ballot 23.8 sq. in. Engines of this period gave *circa* 2.7 h.p. per sq. in. of piston area at 3,000 f.p.m. piston speed, and on this basis the estimated outputs would be 61 b.h.p. at 3,500 r.p.m. on the Sunbeam, 64.5 b.h.p. at 3,500 r.p.m. on the Ballot and 55.5 b.h.p. at 4,100 r.p.m. on the Aston Martin. Peak figures realised on the brake were 55 b.h.p. at 4,200 r.p.m. on the Aston Martin, 70 b.h.p. at 3,800 r.p.m. on the Ballot and 83 b.h.p. at 4,250 r.p.m. on the Sunbeam.

Obviously Henri was wringing the last ounce of b.m.e.p. out of the engine he had designed, for he was obtaining 3½ b.h.p. per sq. in. of piston area at 3,640 ft./min. piston speed, but good as these results were they were inadequate to meet newer types of engine with larger piston area and greater r.p.m. The Henri theme had been originally applied to engines of fairly large capacity and moderate r.p.m. ; admirably in harmony with these requirements it was incapable of counterbalancing diminished swept volume, not only from geometrical weaknesses, but also by reason of certain mechanical defects common to this designer's constructions. Henri was wedded to running crankshafts on roller main bearings with plain big ends, and the latter could, therefore, only be lubricated by jets, or, to put it more crudely, by splash. They were, therefore, fundamentally unsuited for high speed operation, which demands a copious supply of pressure oil to plain bearings (for both lubrication and cooling) or, alternatively, ball or roller bearings throughout.

The year 1922 saw the advent of the full roller-bearing engine into Grand Prix racing. The senior members of the Fiat Technical Department, Fornaca and Cavalli, had under them a team of brilliant designers, including Zerbi, Bertarione and Becchia. In 1921 they had produced a superb design for the 3-litre formula which embraced welded steel cylinders and a one-piece crankshaft with full roller bearings, using split housings for both main- and big-end bearings. Additionally, they had discarded the four-valve head in favour of two ports per cylinder, offering better flow values, the total valve area being sustained by placing the valves at an included angle of nearly 100 degrees. The eight-cylinder engines had had the dimensions popularised by Henri, viz. 65 x 112 mm., and as a simple means of producing a 2-litre version for 1922 the number of cylinders was reduced to six, the stroke reduced to 100 mm., and the bore left untouched.

Using the same fundamentals that were applied above we see that the Fiat engine (with a piston area of 31 sq. in.) was capable of giving 84 b.h.p. at 4,600 r.p.m., and in point of fact, owing to the superior mechanical construction, it could be run at 5,200 r.p.m. with an output of rather over 90 b.h.p. equal to 3 b.h.p./sq. in. at 3,420 ft./mm. piston speed.

The only other serious competitor in 1922 was Bugatti, who created an entirely original design. Using eight cylinders with a bore and stroke of 60 x 88 mm. his engine was, within the frame of reference used in this analysis, capable of 94 b.h.p. at 5,200 r.p.m. but as he, also, was at this time an exponent of roller main bearings with white-metal big ends, the realised power of his engine was substantially below the theoretical possibilities.

In the French Grand Prix at Strasbourg in June and in the Italian Grand Prix at Monza in September, the Fiats were overwhelmingly successful ; thus after nine years of renown the Henri theme was completely discredited and utterly cast down within a space of three months. For the next six years the Fiat school of design was in the ascendant. This was as true in the realm of chassis design and the general form of body work as it was in the realm of engine layout.

The frame of the Strasbourg Fiat was in-swept in plan so that it followed the lines of the tapering wedge-shaped tail. The body was comparatively flat-sided and as can be seen from illustrations, the appearance was notably different from the comparatively barrel-shape, long-tailed cars which had come directly after the square-backed bodies used until 1914. On the Fiat even the exhaust pipe was moulded into the body's side, giving a clean appearance which promoted a definite fashion during the next three years, and an easily recognisable inspiration to other designers for more than a decade.

Owing to the narrowness of the frame at the back it was necessary to hang the rear semi-elliptic springs on to a cross-bar, and at the front the spring leaves were passed through the axle beam in the manner pioneered on the 1914 Vauxhall Grand Prix cars. In accordance with current practice, four-wheel brakes were servo operated, oil pressure being used to increase the effort of the driver's foot, but with diminishing all-up weight the mass of the brake drums began to have a very undesirable effect on road holding.

Ready for the starting line, with crew aboard, the 1922 Fiat was some 4 cwt (nearly 20 per cent) lighter than the previous year's Ballot, but there was but little change in the unsprung weight. On these 2-litre cars, therefore, we see the first step towards stiff springs giving very limited travel, adhesion being to some extent deliberately sacrificed in the interests of high speed stability.

The breakaway from Henri design in the Fiat transmission was as marked as in the engine layout. As we have seen, the former popularised the Hotchkiss-drive for racing cars, but the Fiat successes focused attention on the torque tube rear axle with only one universal joint and rear springs free to perform with no extraneous loading. Bugatti used reverse quarter-elliptic springs with an external torque arm ; and also continued to employ a separately mounted four-speed gearbox.

The light weight of the 2-litre Fiat cars has already been touched upon but this notwithstanding, the performance factors of the car compare unfavourably with both preceding and following Grand Prix models on account of the comparatively low maximum power available. In consequence, only 7.6 h.p. was produced for each square foot of frontal area and the output per laden ton was only 102 h.p.

The 1923 season was remarkable for three things, In the French Grand Prix the only serious rivals were Fiat and Sunbeam, for Bugatti prejudiced his chances by introducing an envelope-type streamlined car with proportions of wheelbase to track which were both unorthodox and unsuccessful. The second feature was that the Sunbeam Company had built, under the direction of Bertarione, who had been secured from Fiat for the purpose, a six-cylinder 2-litre engine which was almost a replica of the previous year's Strasbourg Fiat. The cylinder bore was enlarged by 2 mm. and the stroke reduced by 6 mm., and by detail attentions the output was raised from 85 b.h.p. at 5,000 r.p.m. when first constructed to 102 b.h.p. at the same engine speed as raced at Tours. The chassis remained almost unaltered from the 1922 Henri car, but the body work was rebuilt along Fiat lines.

We may presume that an additional 10 b.h.p. raised the maximum speed of the Sunbeam to about 110 m.p.h., and this, coupled with complete reliability, was sufficient to win the French Grand Prix.

The third, and most vital, contribution of 1923 in motor racing history was, undoubtedly, the introduction by Fiat of supercharging to Grand Prix racing. Mechanical troubles prevented these cars from winning at Tours, but technically they were so clearly superior that they had virtually a walk-over in the 1923 Italian Grand Prix at Monza three months later. The introduction of supercharging was indeed a matter of so great moment that it has to be considered in a separate chapter.

CHAPTER TWELVE

The Beginnings of Blowing

THE introduction of the twin-camshaft engine in 1912 ; front brakes in 1914 ; and the eight-cylinder in-line engine in 1919 exerted permanent effects upon subsequent racing cars, but none of these changes had such potentially far-reaching consequences as supercharging which added, as it were, an extra dimension in engine design and led to tremendous developments in fuel, cooling problems and, in the long run, to the maximum power available, irrespective of engine capacity.

The gains to be derived from the use of a blower were obvious at an early stage in automobile history and it appears that the first idea of supercharging came from the brain of Louis Renault in 1902, in which year he patented an arrangement in which a centrifugal fan blew air into the mouth of the carburetter.

In 1905, Lee Chadwick, with the assistance of his able engineer, John T. Nichols, designed a six-cylinder car called the Type 15 with a bore and stroke of 127 x 152.5 mm. This was about 5 m.p.h. faster than preceding four-cylinder models, but in this, and in various other ways, the car was not wholly up to expectations. It was replaced by a Type 16 in 1907 which had *inter alia* larger inlet valves and was followed by a Type 19 with overhead inlet valves of exceptional diameter. These did not provide the gain in power that was expected, the power curve dropping off sharply on the higher ranges of r.p.m. This led Chadwick to suggest to Nichols that the carburetter be put under pressure in order to secure at least 100 per cent volumetric efficiency at high engine speeds.

The first experiment embraced a single-stage centrifugal booster driven at nine times crank speed by a flat belt from the 18-in. flywheel. The results were excellent and led to a decision to ensure actual supercharging of the cylinders by means of a higher pressure booster in three stages. This was driven, again at nine times engine speed, by a 2-in. Vici leather belt. Two universal joints were fitted in the drive to permit belt adjustment and keyed to the driving shaft were three 12-bladed impellers all of 10-in. diameter but of varying width so as to provide the required three stages of compression. Air was delivered to the carburetter under pressure and received from a pipe running up to the back of the radiator core which was intended to give some ram effect. This pipe was jacketed and fed with hot water.

As evidence of the advanced thinking by Chadwick at this time this layout was adopted after serious consideration had been given to an exhaust-driven blower and success was immediate. The car was entered for, and won, the Wilkes Barre Hill Climb on May 30, 1908, and was thus victorious in the first event for which a blown engine was entered. On October 24, of the same year, the car was lying third on the first, and second on the ensuing two laps, of the Vanderbilt Cup Race. Haupt, who was driving, took the lead in the fourth lap which he retained up to the sixth. He was then put back by magneto trouble caused by some extraneous brass nuts which had been placed within the contact breaker case. In the Savannah Grand Prize the car broke down from the after effects of an accident which had taken place on the road prior to the race. In subsequent U.S. events many wins were recorded, the most important being the 200-mile road race at Fairmount Park in 1910.

Replicas of these cars were sold to the public and one was timed by the A.A.A. to exceed 100 m.p.h.-almost certainly the first catalogued model to achieve such a speed. Well over 110 m.p.h. was frequently realised on these vehicles but in 1911, Chadwick abandoned his automobile interests, and although he had made no effort to hide his work, it was not until 1923 that it was continued by Miller and Duesenburg with the assistance of Dr. Sanford Moss.

In Europe, the first serious attempts to supercharge a racing car engine were made in 1911, by Sizaire, who experimented with a centrifugal blower, and by Birkigt, who carried out some most interesting experimental work with a piston type displacer on a car intended for the 1912 Coupe de l'Auto. This was described by W. F. Bradley, the Continental correspondent of *The Motor,* who stated that nearly 100 h.p. was being obtained from a 3-litre engine. Drawings supplied by him showed that it was an intelligent adaptation of the existing T-headed Hispano Suiza engine with four additional cams on the inlet camshaft. Each of these opened an overhead inlet valve which received mixture from a separate carburetter through the intermediary of a rotary valve placed centrally in the cylinder head. By this means it was possible to draw in the normal charge to the normal inlet system, the piston type displacer (which is expensive in size and weight for a given swept volume) being relied upon solely for the additional volume required to supercharge.

Development troubles prevented this engine from appearing in the race, and in the subsequent year superchargers were forbidden on the 3-litre cars entered for the Coup de l'Auto race, as they were in 1914 under the regulations setting a limited 4½-litres for the Grand Prix at Lyons.

The 1914-18 war put a full stop to European racing, but it focused attention on supercharging as a means whereby aeroplane engines could retain good power at height despite the natural reduction of air density. Towards the end of hostilities German engineers were paying particular attention to this problem, and as soon as it was possible to consider peace-time projects, the manufacturers of the Mercedes car began to study the question of supercharging road vehicles.

The first pump used by Mercedes was a piston compressor with three radial cylinders. This was discarded in favour of a vane-type pump patented by Wittig. Mercedes, however, experienced mechanical and lubrication troubles with the Wittig and turned to the Roots blower. All the original experimental work was carried out on either aero-engines or submarine power units.

Development on automobiles was initiated in September, 1919, with a Roots blower running at a maximum speed of between 8,000 and 10,000 r.p.m., fitted to a Mercedes Knight sleeve-valve engine as it was thought that this valve gear would reliably withstand a higher thermal loading than the poppet-valve type.

Trials began in mid-October of 1919, and these quickly proved that the sleeve valve was incapable of standing up to the extra heat involved, the oil burning badly near the exhaust port and leading to seizure of the sleeves. The experiments were, therefore, continued with the poppet-valve type of engine and a supercharged 28/95 six-cylinder Mercedes was entered for the Coppa Florio race of 1921. Driven by Max Sailer, this car won the first victory in racing for a supercharged model.

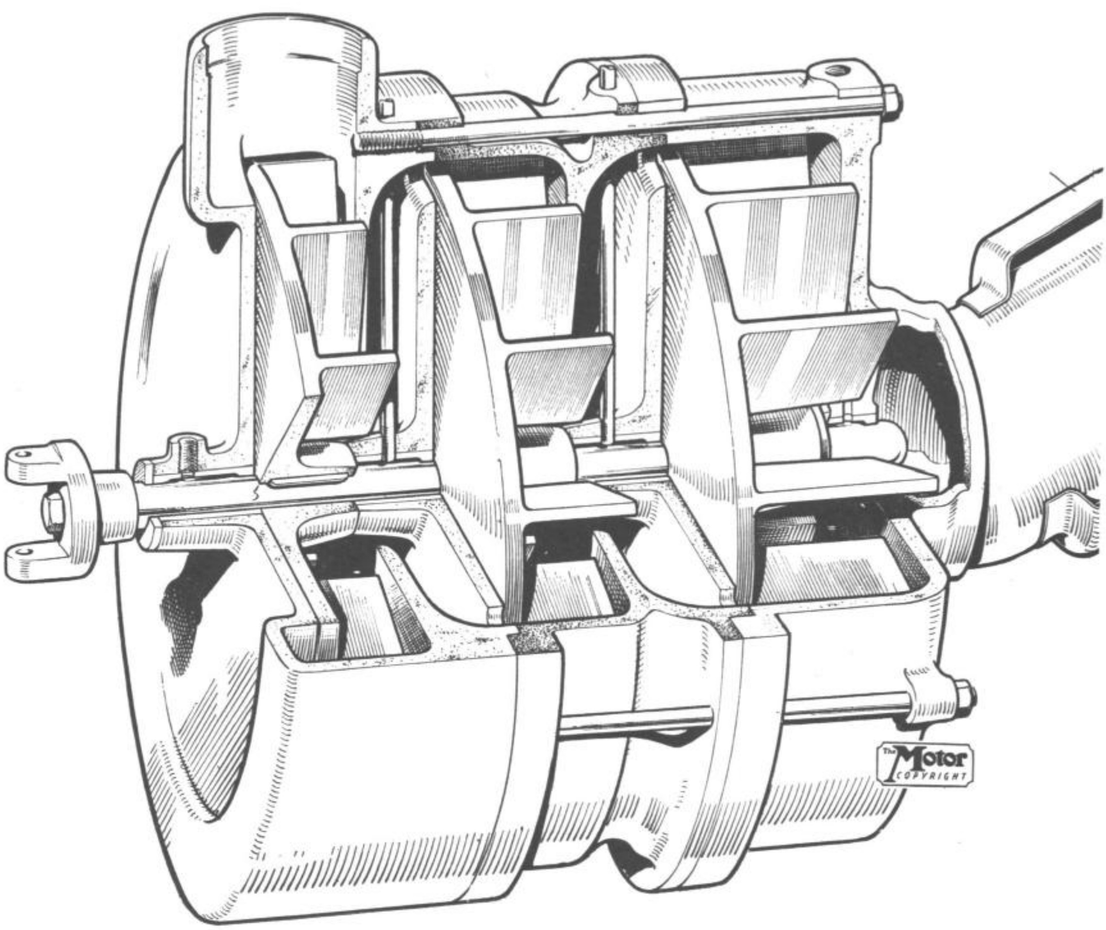

These drawings show alternative systems of supercharging. developed by Chadwick in the U.S.A. in 1907-8 and Birkigt, in Paris, in 1912. The American arrangement used a centrifugal blower driven at nine times engine speed, so that the rotor speed was about 18,000 r.p.m. The rotor diameter was 10 in., giving a tip speed of 700 ft./sec. As can be seen from this drawing, compression was divided into three stages by varying the width of the rotor blades, the air passing through ports cut in the dividing walls between the three sections In the Hispano-Suiza layout a double piston pump was driven from the nose of the crankshaft, this being connected with a supplementary overhead inlet valve placed in the T-head. By using phased rotary valves for the displacer it became possible to have normal aspiration through the carburetter for most of the inlet stroke followed by a pressurised surcharge in the last few degrees of crank travel. Although this experimental engine was not raced, it is claimed to have given 100 b.h.p. from 3 litres capacity.

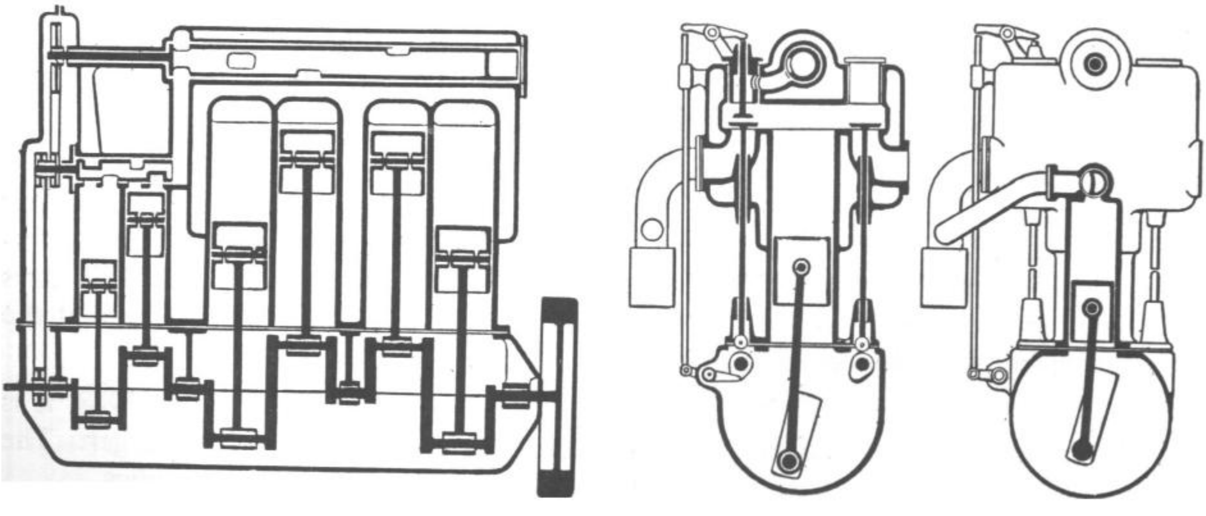

Thus encouraged, Mercedes designed a sports 1½-litre car with a supercharger.

Two of these cars were entered for the 1922 Targa Florio Race, driven by Scheef and Minoia ; they had poor brakes and road holding, one of them retired and the other finished twentieth–twenty minutes behind a tuned standard Fiat and forty minutes behind an o.h.v. Fiat of the same capacity.

One of these cars came to England and it is thus possible to show the full working of the device which is as follows. A small Roots blower mounted vertically at the front end of the crankcase and driven by bevel gears at 2.2 times engine speed forced air into the carburetter only when the throttle pedal was fully depressed, a feature that was characteristic of almost all Mercedes supercharged engines up until 1937.

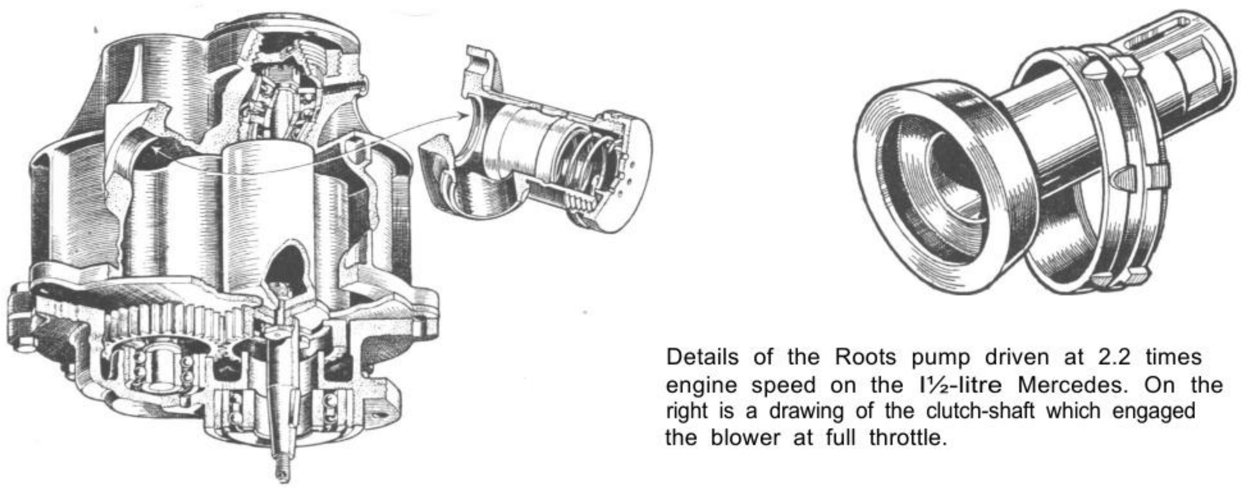

Details of the Roots pump driven at 2.2 times engine speed on the I½-litre Mercedes. On the right is a drawing of the clutch-shaft which engaged the blower at full throttle.

The driving bevel was connected to a large drilled sleeve internally splined and fitting into these splines was a light floating bush which had a coned face. The drive from the crankshaft was transmitted through a male cone member which could be drawn into engagement with the loose bushes, thus connecting up the supercharger drive and providing full boost. This cone clutch was connected to the accelerator pedal and further linkages cut off and sealed the normal air intake to the carburetter which then received only pressure air from the blower.

The float chamber had to be sealed and it was necessary for the fuel to be delivered at a higher pressure than the supercharged air, otherwise it would be impossible to replenish the carburetter. This was achieved by mounting a small rotary pump on top of the blower. When the latter was running, this auxiliary pump forced fuel into the carburetter ; when it was not running, fuel was circulated past the working clearances of the pump by the normal air pressure in the fuel tank.

It is interesting to note that the supercharger, as fitted, had a theoretical swept volume of approximately 600 c.c. which gave it a theoretical output of 1.32 litres per engine revolution, taking into account the ratio of the gearing. If we assume a volumetric efficiency of 80 per cent. the charge of air displaced was approximately 1.05 litres per r.p.m., as compared with 0.75 litre, which would be naturally induced, so that the net supercharge was 40 per cent., or approximately 6 lb. per sq. in.

By the courtesy of Lord Ridley, the owner of a car of this type in 1948, it is possible to publish results of bench tests made with and without supercharger. The figures are as follows, the output in supercharged form being shown in italics.

STATISTICS FOR 1922 MERCEDES 1½-LITRE ENGINE

R.P.M.	*B.H.P.*	*B.M.E.P.*	*H.P. per sq. in. of piston area*
1500	19	109	0.88
2000	27	112	1.25
2500	36	120	1.67
3000	45	124	2.1
3500	49 *65*	116 *153*	*2.24 3.1*
4000	54 *72*	112 *150*	2.5 *3.35*
4250	*75*	*148*	3.5
4500	*79*	*147*	*3.68*
4750	*82*	*145*	*3.8*

In sum, three principal features characterised the initial application of supercharging to the 1922-3 Mercedes cars. They were :

(1) The supply of pressure air to the carburetter.
(2) The temporary engagement of the blower on full throttle in order to achieve brief periods of overload.
(3) A substantial step-up in output. The gain at 4,000 r.p.m. (3,000 ft./min. on the 1922 1½-litre model) was 34 per cent ; the overall increase some 50 per cent.

The application of supercharging by Fiat, the first company to use the principle in Grand Prix racing, was somewhat different. They used the Wittig vane-type blower which had been tried and discarded by Mercedes in 1919, but it was coupled permanently to the nose of the crankshaft and ran at engine speed. A drawing shows that the delivery side of the casing was made in the form of a hinged flap, so designed that it could be swung aside, whereupon the vanes would rotate without positively displacing any air. Hence, Fiat, like Mercedes, regarded the supply of pressure air as a temporary expedient for brief periods and ensured that the driver could in effect engage or disengage the supercharger at will. Furthermore, and again following Mercedes practice, the blower pumped air only into the carburetter. This necessitated a sealed float chamber and a mechanical pump was used capable of supplying against the supercharge pressure, this pump having an overriding hand control for use in emergencies.

But, unlike the Mercedes experiments, the effect of the Fiat-Wittig blower on engine output is not easy to assess because it was applied to a new type of engine which, although falling within the 2-litre capacity class, had a greater piston area than the unsupercharged type used in the previous year. From published information we can, however, set out a table of comparison.

Car	*Cyls.*	*Bore*	*Stroke*	*B.H.P.*	*R.P.M.*	*F.P.M.*	*B.M.E.P.*	*H.P./sq. in.*
1922 Monza Fiat	6	65	100	118	5,000	3,280	145	3.6
1923 Fiat-Wittig (S)	8	60	87.5	130	5,500	3,160	154	3.73
1924 Fiat Roots (S)	8	60	87.5	146	5,500	3,160	169	4.19

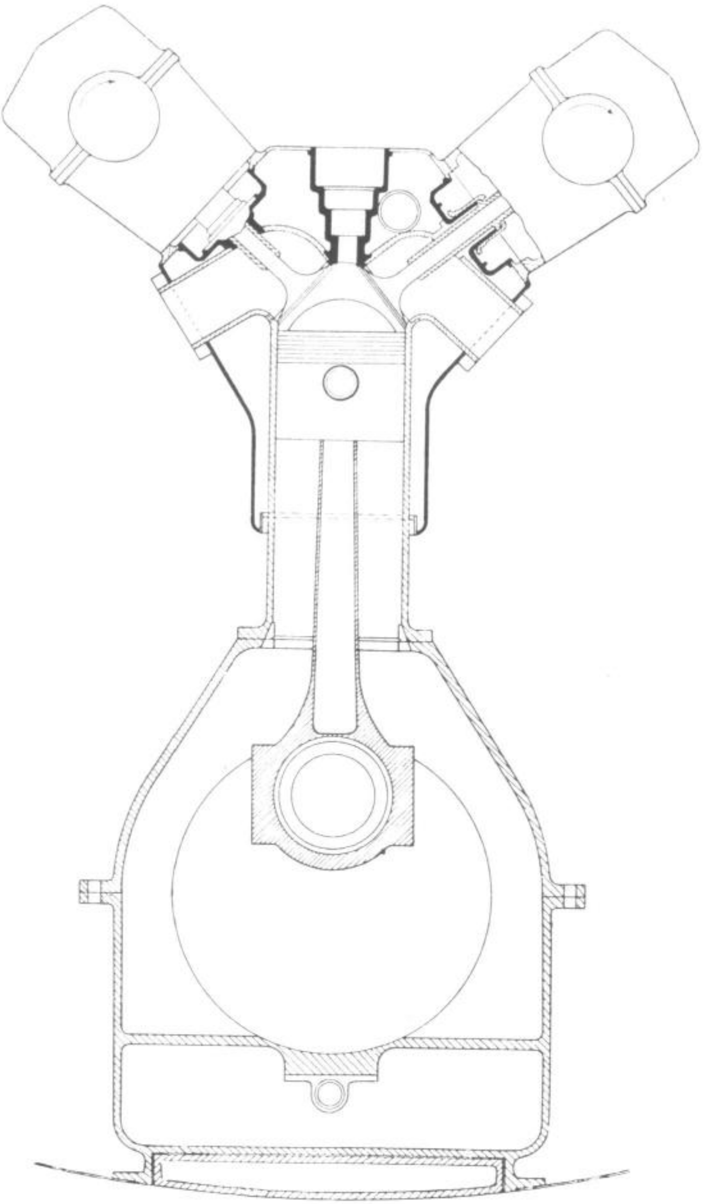

Cross section of 1923-5 Sunbeam 2-litre engine. Scale 1 : 4

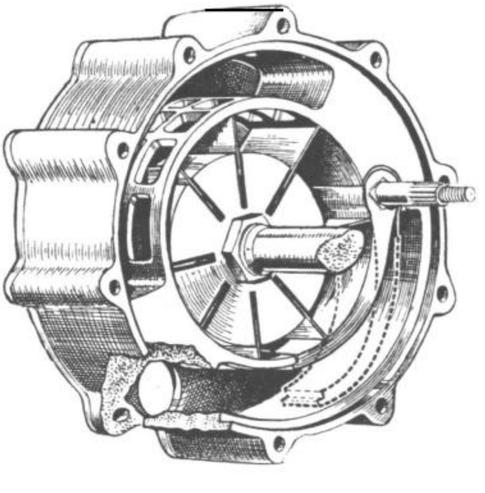

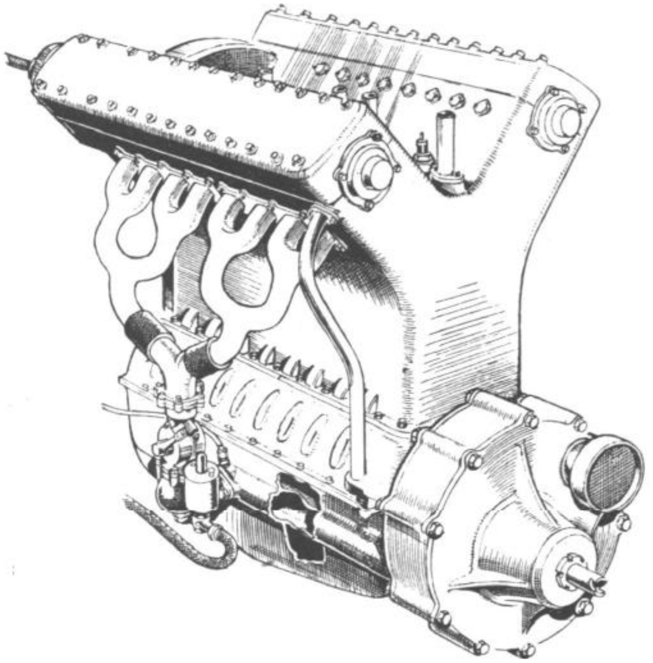

Right : The mounting of the Wittig vane-type blower for the 1923 Fiat engine is shown with (above) details of the blower itself.

The figures for the engine as first designed make an interesting contrast with those of the Mercedes engine. On the latter Paul Daimler and Ob. Ing. Gros used supercharging, to raise the h.p./sq. in. by some 50 per cent, whereas on the Fiat the engineers responsible (Fornaca, Cavalli and Zerbi, Cappa having resigned) were rewarded by an increase in specific output of only some six per cent, the gross output increasing by only ten per cent despite the use of substantially enlarged piston area.

It is easy to see from these figures why the supercharged Fiats at Tours were but very little faster than their unsupercharged rivals and these somewhat disappointing results can probably be ascribed to the poor adiabatic efficiency in the supercharger leading simultaneously to high power consumption in the blower and (probably) very high temperature of the pressure air supplied to the carburetter. Additionally, this early vane-type blower, which had proved reliable on the test-bed and at trials on the Monza track, suffered mechanical failures when subject to the harder tests of Grand Prix racing on a dusty circuit with many violent changes of engine speed. It is therefore scarcely surprising that it was quickly replaced by a Roots type, the naturally high mechanical efficiency of which more than offset the absence of pre-compression within the blower casing at contra pressures of up to 10 lb./sq. in. Still further to improve the overall efficiency a somewhat elaborate inter-cooler was placed between the blower and the carburetter so that mixture was finally delivered to the cylinders at a boost of 8.5 lb./sq. in. and 54 degrees C. with the engine running at peak power.

These developments took place between the French and Italian Grands Prix of 1923 and the same engine and blower combination was retained throughout the 1924 season. It will be noticed that in its second manifestation b.m.e.p. was increased by 16½ per cent compared with the earlier unsupercharged engine and this may be considered a somewhat disappointing result in view of the comparatively high supercharged pressure. If, however, we compare b.m.e.p. at the same crankshaft speed we find that there is an increase from 145 lb. to 179 lb. with a blower pressure of 8.2 lb./sq. in., that is to say, an increase of 23 per cent in a b.m.e.p. following a rise in manifold pressure from 1.0 to 1.57 ata. Examination of the output curves makes it clear, however, that the peak of the b.m.e.p. curve was at the comparatively low speed of 4,000 r.p.m. at which the excellent figure of 187 lb./sq. in. was realised with an absolute manifold pressure of 1.5 ata. It is therefore fairly clear that this engine suffered from poor breathing despite the use of large diameter valves, and this was probably due to somewhat abrupt bends in the inlet ports coupled with inadequate inlet valve opening periods. In this matter the curves reproduced in Chapter XIV should be studied.

Despite these technical criticisms the effect of supercharging on road performance was very marked. It is claimed that the fully developed six-cylinder engine would give a road speed of 112 m.p.h. whilst the blown type gave 124 m.p.h. in its first form and 136 m.p.h. when fitted with a Roots blower. These gains in speed are all rather higher than one would expect on the basis of the cube root law, but there is no question that following the increase in engine output over a wide band of the speed range the speed at Monza with the Roots blown car in 1923 was five per cent faster for a lap than that of the 1922 unsupercharged model. As the overall annual increment in road speed lies between one and two per cent, a gain of this order in one year was both abnormal and decisive.

The technical details of the Fiat engines of 1922-7 may be found in Chapter XIV, and the influence of their success on the design practice of other companies was immediate.

By the Spring of 1924 not only Sunbeam but also the Alfa Romeo Company were running a supercharged 2-litre car which largely followed Fiat principles. This, the celebrated P2 model, which had a useful racing life of over five years, also had a constantly driven Roots-type blower driven directly from the nose of the crankshaft and although an inter-cooler was not used, the pressure air was supplied to the carburetter through a large ribbed aluminium pipe.

As already mentioned, the first successful supercharged racing car was built in the U.S.A. and used a centrifugal-type blower. The determination of design by tradition is one of the more remarkable features of automobile history and explains in part that when supercharging was at last revived in the U.S.A. for the Indianapolis races a centrifugal blower was employed. The 2-litre Duesenberg which ran in 1924 used an 8 in. impeller mounted at right angles to the crankshaft on the inlet side of the engine, a short cross-shaft passing between cylinders Nos. 4 and 5, connecting to a right-angle bevel drive joined in turn to a shaft running backwards to the timing gears at the front of the engine. The overall gear ratio was such that the impeller was driven at eight times engine speed, so that at 5,000 r.p.m. the tip speed of the impeller was over 1,300 ft./sec.

Rotor tip speed is of vital importance in centrifugal blowers, for unlike the positive delivery type, pressure is built up as a conversion from velocity, and, as a direct consequence, the supercharge produced by a centrifugal blower is far more dependent on engine speed than it is with a positive displacement type, such as the Roots.

Some examples are worth quoting. With the positive displacement type delivery per revolution increases with rise in the speed since the slip loss (or leak) through the required clearances forms a diminishing fraction of the total volume of air pumped per minute. Empirically the change will be as from, say, 65 per cent volumetric efficiency at 2,500 r.p.m. rising to 80 per cent at 4,000 r.p.m. and constant after. If, therefore, a supercharger with a theoretical swept volume of 2 litres per revolution be geared directly to the crankshaft on a 2-litre car the net volume delivered at 1,000 r.p.m. will be $\frac{2 \times 65}{100}$ which equals 1.3 litres, whereas at 4,000 r.p.m. it will be $\frac{2 \times 80}{100}$ which equals 1.6 litres. In round figures, therefore, the boost will vary as between 4½ lb. (1.3 Ata) (in the lower part of the speed range) to 9 lb. (1.6 Ata) and will be constant between, say, 4,000 and 5,500 r.p.m.

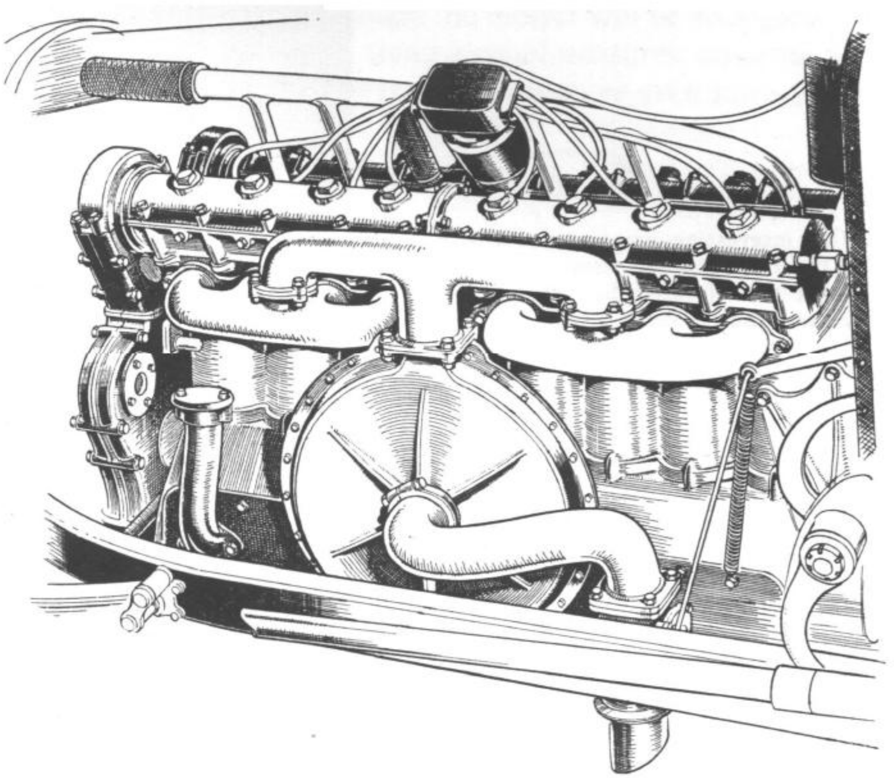

The drawing shows the 1924 Duesenberg engine which won the Indianapolis Race of that year : this engine was one of the first to suck mixture from a carburetter mounted on the intake side of the blower, a practice which has since become universal.

The centrifugal blower behaves differently. Some curves published by the A.C. Sparking Plug Co., relating to Miller engines, show that a 9lb. boost at 4,000 r.p.m. rose to 18 lb. at 6,000 r.p.m. and calculations prove that at 3,000 r.p.m. the blower would provide little or no positive pressure.

Hence applying a centrifugal blower to an engine results in a radical revision of the b.m.e.p. and torque characteristics, there being little gain at low speeds and a very substantial step-up at the top of the power curve. By contrast, with a Roots blower, particularly if it is driven at more than engine speed, the b.m.e.p. curve is lifted up along its entire length but retains basically the same form as on an unblown type. Some graphs show this clearly, a particularly interesting comparison being between the b.m.e.p. figures for the 1925 Delage and for the Miller. At over 2,500 ft./min. (circa 5,000 r.p.m. on both engines) the Miller is superior, but below this speed the curve falls away very rapidly indeed. In U.S.A. track racing, where the cars run at virtually constant speed, the centrifugal blower is admirably suited for it is light, compact, presents no lubrication or mechanical friction problems and will give high pressures with excellent efficiency. By contrast the Roots blower becomes increasingly inefficient with contra pressures above 10 lb. (1.6 Ata), and the alternative vane types are bulky and present many mechanical difficulties. However, the sensitive relation between r.p.m. and delivery characteristics of the centrifugal blower put a car so equipped at an almost hopeless disadvantage in road racing where there are wide variations in engine speed, whereas the good pumping of the Roots type, particularly when driven at over engine speed, is of the greatest value in sustaining m.e.p. and torque at the low end of the r.p.m. scale. For these reasons the use of the centrifugal blower by Duesenberg (afterward followed by Miller and the other leading U.S. constructors) effectively debarred American cars from becoming serious competitors in European Grand Prix racing and negatived any possibility that the 1921 French Grand Prix success could be repeated after 1923.

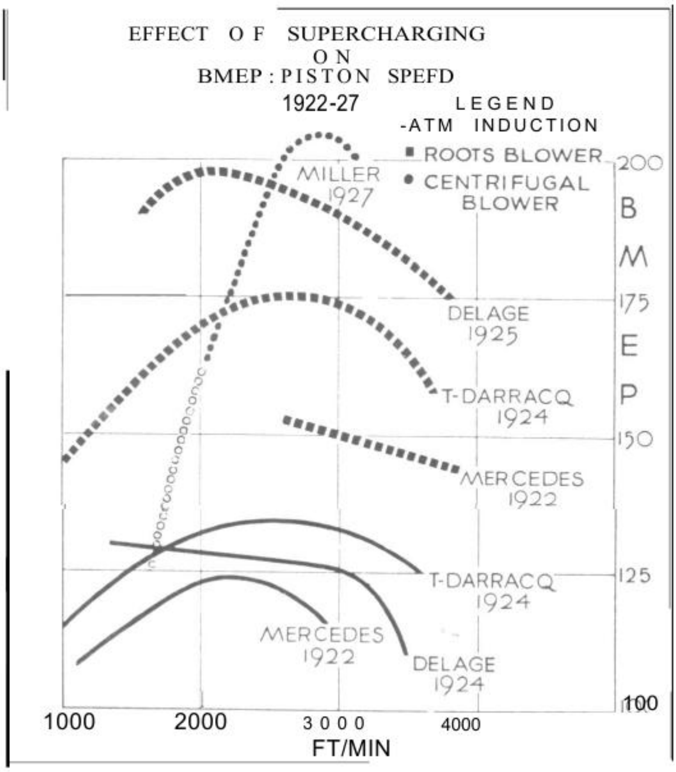

This interesting graph shows that the B.M.E.P. curves of unsupercharged engines are elevated by using a Roots blower but remain similar in shape. The characteristic curve with a centrifugal blower has a pronounced peak and falls off badly at low engine speed.

In one detail Duesenberg made a most useful contribution to the art of supercharging, for the 1924 car initiated the supply of mixture to the blower, and thus of fuel and air under pressure to the inlet manifold. This apparently simple change (which may well have had its origin in the accident of practical convenience) had far-reaching results. The mechanical carburation imparted to the mixture ensured better distribution between the cylinders, and, perhaps even more important, the latent heat of vaporisation of the fuel could be used to limit the temperature rise in the blower and the intake manifold. This last-named factor led in turn to the widespread use of alcohol fuels, although with moderate boost pressures the anti-knock qualities of alcohol blends were not seriously needed.

It is sometimes assumed that raising the manifold pressure by, say, 50 per cent is equal to raising the compression ratio in like proportion (from, say, 6 : 1 to 9 : 1), and that fuel quality must be correspondingly adjusted but a more realistic relation is given by the formula (O. Thornycroft, *The General Question of Supercharging,* I.A.E. Proceedings, Vol. 30) :

$$R_2 = R_1\left({}^{P_1}/_{P_2}\right) 0.6$$

The experience of the writer gives a lower power–0.5, on which basis 50 per cent boost on a 6 : 1 ratio is, from an anti-knock viewpoint, equal to 7.75 : 1 running unblown. From this it will be seen that it is quite possible to cope with all normal supercharge pressures by adding reasonable quantities of Tetra-Ethyl-Lead to straight petrol, if detonation is the only problem, and that the special virtues of alcohol blends are a result of their high latent heat of evaporation.

With a 60 per cent adiabatic efficiency in the blower and 10 lb.boost (1.66 Ata) the delivery temperature with air alone passing through the blower will be 80 degrees C., and with petrol added it will be 60 degrees C. By using alcohol mixtures, however, the ingoing charge can readily be reduced to the ambient temperature, or even below, with a substantial reduction in power required to drive a supercharger, a gain in weight of charge delivered to the engine and a reduction in temperature of internal danger areas, such as the exhaust valves and sparking plugs.

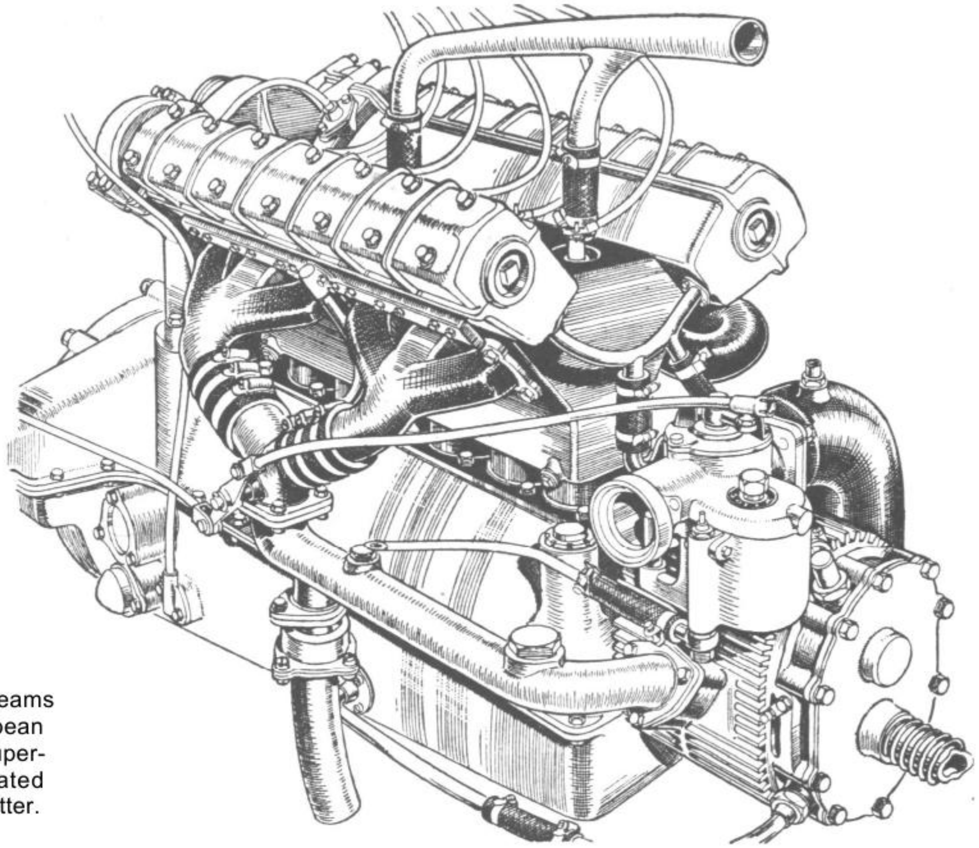

The 1924 G.P. Sunbeams were the first European engines to use a supercharger that aspirated through the carburetter.

Moreover, although with petrol enrichment of the fuel : air ratio beyond 1 : 12 leads to a substantial loss in power, extremely strong mixtures of alcohol (of the order of one part fuel to four parts of air by weight) can be fed into engines without power loss. Developments along these lines were, however, to come much later in the history of the supercharged engine ; in the early years, with which this chapter is concerned, one of the most significant developments was the combination by Sunbeam of the Roots-type blower with a carburetter on the induction side.

From the technical viewpoint the supercharging of the 2-litre Sunbeam engine in 1924 is of two-fold interest. Because it was an existing design it is possible to make direct comparison between unblown and blown outputs ; because experiments were made with the carburetter placed both fore and aft of the blower we can examine the effect of this change.

By the courtesy of J. L. Wyer, Esq., sometime member of the Sunbeam Experimental Department, it is possible to provide complete information on these experiments. The unsupercharged engine at its highest point of development, running with a 7.3 : 1 compression ratio, developed 102 h.p. at 5,000 r.p.m., corresponding to 134 b.m.e.p. at 3,100 ft./min. This was almost the peak of the m.e.p. curve, the figure falling off sharply so that at 3,500 r.p.m. only 124 lb. was realised. The application of a supercharger elevated the b.m.e.p. figure to 140 lb. at 1,000 r.p.m., and with the carburetter placed on the pressure side of the induction system, the m.e.p. curve rose gradually and in a straight line from this figure up to 150 lb. at 3,500 r.p.m. It then flattened, declining to 146 lb. at 5,200 r.p.m. corresponding with a maximum power of 115 b.h.p.

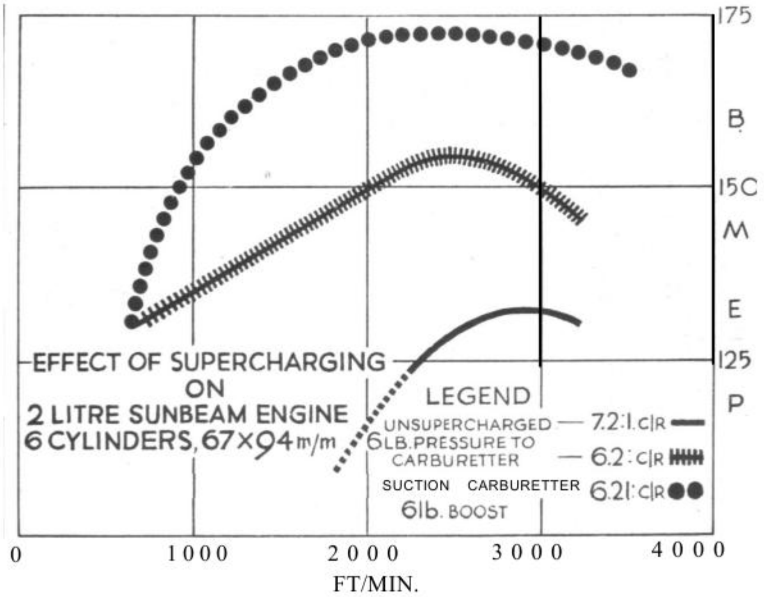

Bringing the carburetter on to the suction side of the blower transformed the characteristics. The m.e.p. curve rose rapidly in the lower part of the engine, speed reaching 150 lb. at 1,400 r.p.m., 170 lb. at 2,800 r.p.m. and peaked at 178 lb. at 4,500 r.p.m. At 5,500 r.p.m. the figure realised was 170 lb., corresponding with 138 b.h.p.

The b.m.e.p. curves reproduced in graphical form are related to piston speed so as to make them directly comparable with previous (and later) facts, but the advantages of supplying mixture to the blower are clear whatever system of presentation be adopted. It is scarcely surprising that following the pioneer work of Duesenberg and Sunbeam in 1924 the practice of placing the carburetter on the suction side of the blower became uniform with the solitary exception of Mercedes-Benz who, somewhat obstinately, clung to the pressure air arrangement until the mid-summer of 1937. Generally speaking, however, the principles of supercharging were thoroughly established in the brief space between the French Grand Prix races of 1923 and 1924, and there were no great developments during the ensuing ten years.

CHAPTER THIRTEEN

1924-5 – Fixing the Type

IT has been remarked in the early chapters that the year 1925 is remarkable for being the first occasion in which a driving mechanic was not required. The regulations, however, still prescribed two-seater bodies, and although frontal area was slightly reduced by the absence of the mechanic's head, left shoulder, and arm, the change cannot sensibly have modified circuit performances. The three years 1923-5 saw the evolution of the classic type of racing car ; after some twenty years of development the type was, as it were, fixed and it is, therefore, of value to make a general summary of the state of the art at this time.

A notable development during this period was a steady increase in weight, although the engine capacity remained constant. In 1922 the winning Fiat had a wheelbase of 8 ft. 2½ in. and weighed approximately 14 cwt. In 1923 the eight-cylinder Fiats weighed nearly 15 cwt., and the unsupercharged Sunbeams turned the scales at the exceedingly low figure of 13.3 cwt., but by 1924, when Sunbeams developed new chassis to take the blown engine, having torque tube drive and a longer wheelbase (8 ft. 6 in.), the weight went up to 16 cwt., with Alfa Romeo about half-a-cwt. lighter. Delage and Bugatti, running unsupercharged, were much lighter, about 14 cwt. only.

Nevertheless, due to the greater power developed by the blown engines, the power-to-weight ratio figure very much favoured the latter type. In assessing this figure we should really take the car in running trim, i.e., with fuel and crew. If we do this we find that the 1922 Fiat had about 102 b.h.p. per ton, the 1924 Sunbeam 150 b.h.p. per ton, and the 1925 (driver only) Alfa Romeo 180 b.h.p. per ton ; in other words, in three years the power-to-weight ratio increased by 77 per cent.

The power per square foot of frontal area also rose from about 7½ h.p. on the Fiat and 13½ h.p. on the Sunbeam, to about 17 h.p. on the twelve-cylinder Delage of 1925. On this basis one would expect the maximum speeds of the cars to be of the order of: Fiat, 100 per cent ; Sunbeam, 121 per cent ; Delage, 133 per cent. As we know that the latter car had a timed maximum over the kilometre of 134 m.p.h., it follows that the calculated maxima would be : Sunbeam, 124 m.p.h. ; Fiat, 102.5 m.p.h. ; we know that under neutral conditions these figures are very close to the truth and that they correlate well with the estimates derived from average indexes.

A study of the data table shows that power per litre, which is, after all, the determining issue under a capacity formula, was more than doubled during the course of three years. B.M.E.P. was elevated by nearly 50 per cent and power per square inch of piston area raised by 66 per cent, and although piston speeds did not increase very greatly, r.p.m. were raised from approximately 5,000 to as high as 7,000 on the Delage by reducing the piston stroke. The stroke : bore ratios varied between 1.4 and 1.55 : 1, in place of the 1.72 : 1, which was so popular during the 1920-21 period.

Compression ratios changed but little, being about 6 : 1 on the earlier engines and 7 : 1 on the 1925 types. Using atmospheric induction one would, from the foregoing considerations, expect maximum horsepower to increase from the 92 b.h.p. of the 1922 Fiat up to about 125 b.h.p. for the Delage, i.e., by 40 per cent. It is, therefore, evident that 40 per cent of the 100 per cent gain in power per litre may be credited to mechanical improvements and increase in piston area and 60 per cent to supercharging. This in turn implies a supercharge pressure of between 7.5 to 9 lb. per square inch.

Conservative ideas on valve timing were held by practically all designers. On the 1922 Fiats the inlet valve opened on top-dead-centre and the exhaust valve closed only 10 degrees after top-dead-centre, but on the 1924 supercharged Sunbeams, developed from the Fiat, the inlet opening was 10 degrees before top-dead-centre, and the exhaust 15 degrees after, giving an overlap of 25 degrees.

The period under review marks the end of petrol-fuelled racing engines, for as compression ratios were increased in 1922 and 1923 from 6 : 1 up to 7 : 1 it became necessary to add liberal percentages of benzole to the petrol. With supercharging it also became desirable to add alcohol and, although the earlier blown engines used something like a 40 : 60 petrol-benzole mixture, later types ran on about 40 : 40 : 20 petrol-benzole-ethyl alcohol.

In construction the V12 Delage stood alone, for the straight-eight type was dominant throughout. Design conformed very much to a pattern in which the crankshaft ran on ball or roller bearings and was of one piece, the connecting rods also having roller bearings and split big ends and roller cages. Pressure lubrication through the crank was general, as were two valves per cylinder, inclined at a very wide angle around 100 degrees. In other words, the Fiat concept replaced that of Peugeot.

In the previous chapter certain details particularly relevant to the supercharging of the 1923 Fiat engine were set out, and although this eight-cylinder type 405, as it was called, closely resembled the six-cylinder type 404, the weight, surprisingly enough, was actually reduced from 397 lb. to 375 lb.

As before, the crankshaft (which was formed in two halves) ran in roller bearings but the diameter of both the main journals and the crank pin was increased from 40 mm. to 44 mm. The use of roller bearing big ends with split big end caps and cages was continued but the connecting rods made, as previously, from nickel chrome steel, were substantially shortened both absolutely and relatively, whereas the 1922 engine had rods 250 mm. between centres (stroke x 2.23), the 1923 type rods were 165 mm. between centres, i.e. stroke x 1.89.

The fabricated steel cylinders were grouped in two pairs of four, and a detail point of interest is that the plug bosses were given internal circumferential fins and the masking hole was elongated to 18 mm. on the longitudinal axis of the engine. As before light alloy pistons were separated from the bores by bottom seating rings and the valves gave an included angle of 100 degrees. On the eight-cylinder the camshafts were driven by two very short shafts at an angle with a train of three spur wheels running up from the back of the crankshaft.

The use of split cage roller bearings and big end was a feature which has subsequently been used by a number of other constructors, and in view of the fact that the Fiat steel cylinder construction was definitely taken over from Mercedes, it is not uninteresting to note that the latter company were also using split cage roller bearings in their 1922 racing engines, which were on the drawing-board in 1921.

Bugatti was consistently exceptional, with engines having three vertical valves per cylinder, two inlet and one exhaust, plain big ends, and jet-type lubrication to them.

For the journals he employed a centre ball bearing on his three-bearing types, which had solid crankshafts, and five roller bearings on his later models, which had built-up crankshafts held together by taper keys.

The cooling on the majority of the engines was exceedingly good, being facilitated by the wide angle of the valves ; by contrast, Bugatti, with his vertical valves, found himself with what may be best termed iron-cooled head, although it must be admitted that performance did not seem to suffer greatly thereby.

In chassis design, one sees universal employment of four-speed gearboxes and typical ratios taken from the Sunbeam car give speeds for the indirect gears of about 90 m.p.h., 65 m.p.h. and 45 m.p.h.

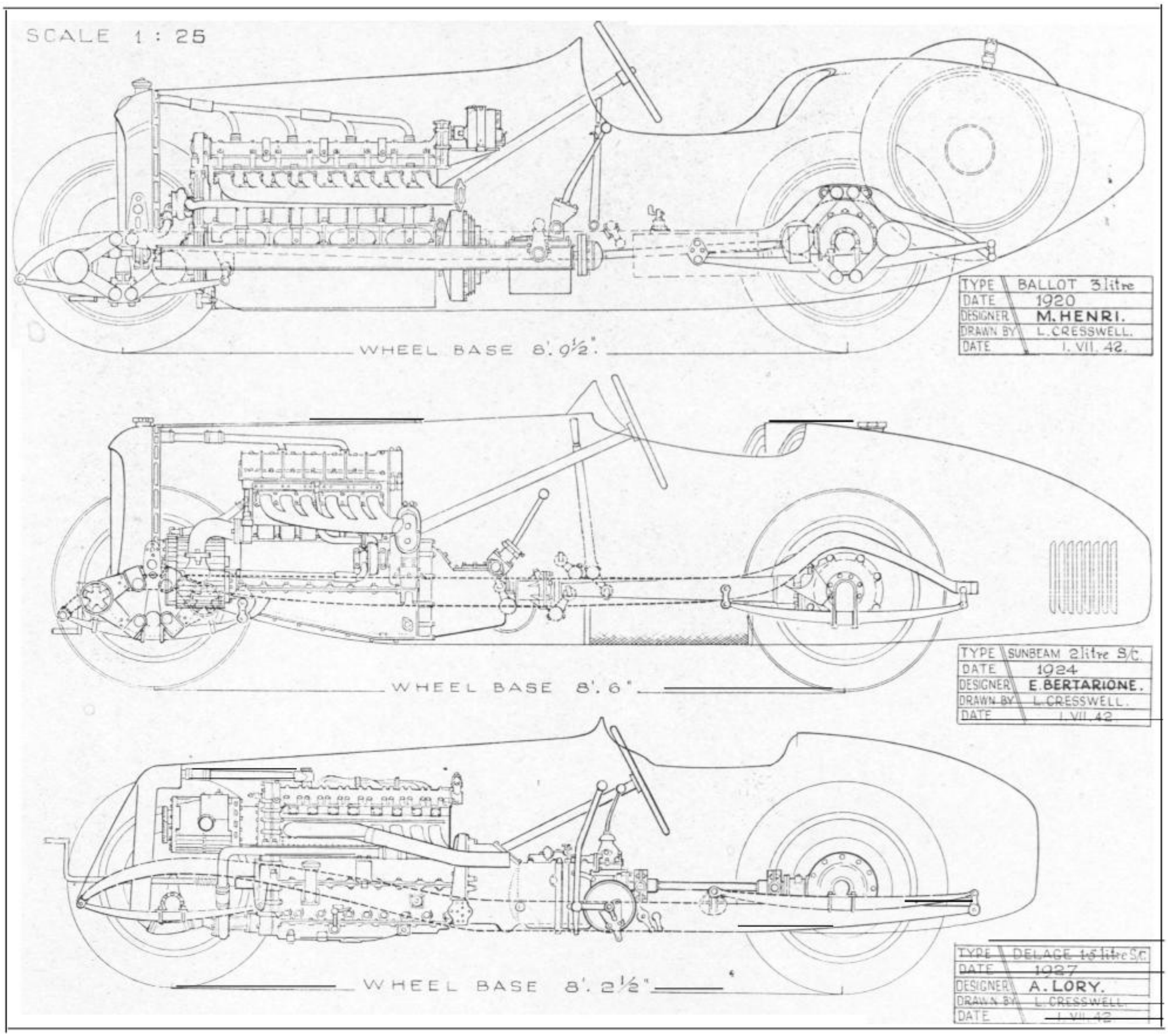

Braking systems showed exceedingly little change, 14½ in. brake drums, giving a brake area of about 330 sq. in. per ton of car weight, being almost standard components. These were operated at high unit pressures between the brake lining and the drum, and this in turn involved a friction servo mechanism driven off the rear and off the gearboxes. Movement of the brake pedal applied a middle brake system running at one-thirtieth engine speed and the reaction was used to apply the normal brake shoes.

Frames, springs, shock absorbers and steering mechanism remained basically unchanged ; in fact, the only chassis trend worthy of note is a gradual acceptance of the view that the rear springs should be relieved from torque either by torque tube drive or by separate radius arms, as employed by Bugatti. The latter designer, incidentally, was one of the few who omitted the brake servo motor.

Chassis design to some extent stagnated, but engines made greater strides in the two years 1924 and 1925 than they have done at any similar period subsequently. On twisty circuits, which put a premium on brake stability and cornering power, the 1925 2-litre cars were slower than the 1½-litre types which followed them, but on really high speed circuits they maintained their superiority for an astonishing length of time ; it was, for instance, six years before the lap record at Monza, put up by the P2 Alfa Romeo in 1924, was beaten.

It was this disproportion between engine power and maximum speed on the one hand and inadequate chassis design on the other which led to the abandonment of the 2-litre formula in the interests of safety and the introduction of a capacity limit of 1½ litres for the period 1926-7, which will be reviewed in the next chapter.

CHAPTER FOURTEEN

The Nemesis of Power

THE 1½-litre limit for the racing seasons 1926 and 1927 accelerated the trend towards engines of high r.p.m., high piston speed, large piston area in relation to capacity, and led to complicated construction.

From the point of view of power per litre, the results were very striking, and were not, in fact, exceeded during the ensuing ten years, but the comparative complexity of the high speed, eight-cylinder, 1½-litre engines was, however, their undoing in the first phases of the new formula. In 1926 neither the Talbot nor Delage cars were able to do themselves justice, the honours going to Bugatti, who adopted the comparatively simple expedient of reducing the bore and piston area of his 2-litre engines and compensating for these changes by adding a supercharger. Exact statistics on the output of the 1926 Bugatti engine are unobtainable, but it is likely, on first principles, that it did not develop over 105 b.h.p., equivalent (with cylinder dimensions of 52 x 58 mm.) to 4.0 b.h.p. per square inch of piston area, and a b.m.e.p. of approximately 150 lb. at 6,000 r.p.m. The gross output available was thus reduced by some 60-70 b.h.p. compared to the 2-litre Alfa Romeo and Delage cars, and lap speeds on fast courses fell in sympathy. For example, at Monza, the Bugatti lap of 98.3 m.p.h. compares with the best figure of 104.24 of the Alfa Romeo, a drop of roughly 6 per cent. Using our established guide of average speed, varying with the sixth root of power per square foot this implies power deficiency of about 33 per cent. On a slow course such as San Sebastian the reduction in circuit speed was only 2.5 per cent.

It must, however, be admitted that the three Bugatti wins in 1926, that is the French Grand Prix, the European Grand Prix and the Italian Grand Prix, were due more to the unreadiness of the opposition than to any superiority of Bugatti design.

Technically, the principal interest in the 1½-litre formula lies with the Talbot and Delage cars, and neither of these were in proper running condition until 1927. Both engines had almost identical bore, stroke and piston areas, but the designers (Bertarione and Becchia for Talbot, and Lory for Delage) approached the problem of developing maximum horse power per litre from substantially different viewpoints. Lory built a straight-eight version of the Vee twelve-cylinder Delage, running at the remarkably high piston speed of 4,000 ft./min., with moderate boost and b.m.e.p 1.47 (Ata), and 177 lb. per sq. in., respectively. The Talbot designers, on the other hand, accepted a limit of a little over 3,000 ft./min. piston speed, but took the boost pressure up to 1.92 (Ata), with a resultant b.m.p. of some 210 lb. sq. in.

By the courtesy of John Wyer, Esq., it is possible to reproduce an actual test curve of the Talbot engine, which reveals, not only the power output, but the extraordinarily interesting influence of alcohol fuel on boost pressure, manifold temperature and power output. The curves A reproduced were taken on a petrol-benzole mixture, whereas curves B relate to the use of a 40 per cent alcohol, 40 per cent benzole and 20 per cent petrol blend. When running with the latter, the compression ratio was raised by half a ratio, and the area of the jet increased by 56 per cent with a corresponding rise in fuel consumption. This reduced the manifold temperature from 87º to 50ºC., with a drop in boost pressure of about one-fifth of an atmosphere. Output rose from 137 to 144 b.h.p., and the mean effective pressure from 184 to 193 lb.

The Talbot engine was entirely characteristic of the times, and just as the 1½-litre Delage may be considered a logical development from the previous twelve-cylinder type, so the Talbot was an obvious extrapolation from the previous six-cylinder Sunbeam. It should perhaps be emphasised that although the 1½-litre formula was new in so far as Grand Prix Racing was concerned, this size had been in common use in Voiturette racing for the previous five years.

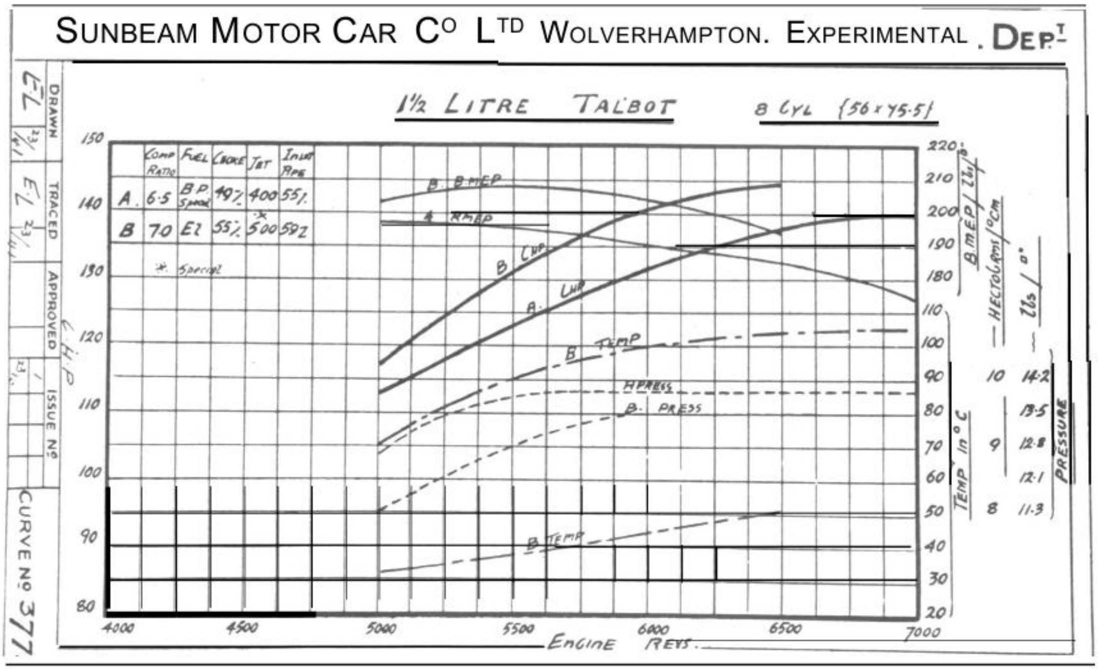

It is, therefore, of interest to make a comparison between the 1926-7 types and those of the same pedigree which immediately preceded them in the Stud Book.

It is especially valuable to analyse the difference between the best specimen of 1924, i.e. the Talbot-Darracq, and the 1927 Delage, for both of these cars were supercharged to about the same manifold pressure. The gain in m.e.p. in these three years was only 5 per cent, but the increase in horse power-per-litre was over 50 per cent, the source of the marked superiority of the Delage springing from an ability to run up to 8,000 r.p.m. and to hold 6,500 r.p.m. for long periods. This quality was derived in part from the use of eight cylinders in place of four, in part by raising the maximum piston speed to as much as 4,000 ft./min This figure was an exceedingly high one, which would have involved severe friction losses if the mechanical layout of the engine had not been devised with outstanding skill.

Although there is no reliable data available as to the relative efficiency of ball and roller bearings compared with plain bearings, there are good reasons for suspecting that the extra power derived from using the former is considerable at high rotational and piston velocities. Lory took no chance in this matter on the Delage, which had ball or roller bearings throughout, with the exception of the oil-pump spindles. Thus, the crankshaft ran on ten separate roller bearings, with eight roller big-ends. Each camshaft was supported on eight roller bearings and the drive to both of them involved fourteen ball bearings. The blower made up a total of four more roller bearings and then the magneto drive notches up the score for ball bearings by a further half-score, making a grand total of sixty-two races of one sort or the other !

When one reckons that, in addition, the engine incorporated twenty-one gears, forty-eight valve springs and thirty-two piston rings, it becomes clear that the Delage Company were in no mood to let complications and expense in design or manufacture stand in the way of the best possible results. But all this effort would have been wasted if the design of the blower and cylinder head had not been so arranged that full advantage could be attained from the high engine speed potential.

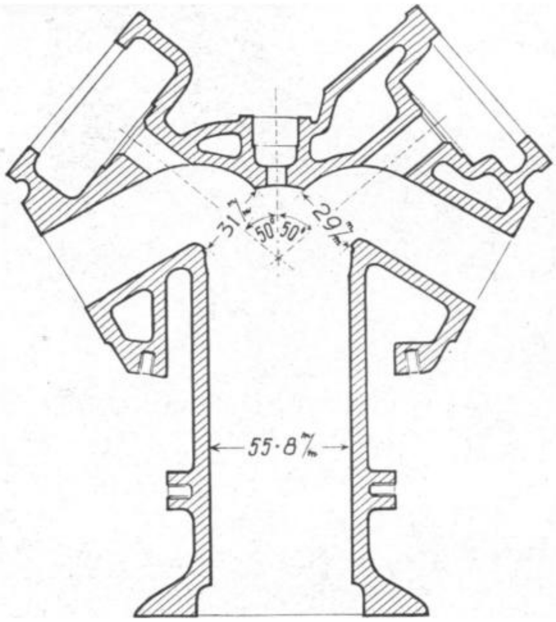

A detail drawing (Scale 1 : 3) of the 1927 Delage cylinder with two valves at an included angle of 100 degrees. The careful port shape and good cooling on the exhaust (right hand) side should be noted ; also the open walls later closed by steel plates.

As a cross-sectional drawing shows, the cylinders were most excellently arranged. The sides of the casting were left open so that one could be really sure that no sand from the foundry remained in awkward places, whilst the wide angle of the valves, and the intelligent disposition of the water spaces, made a model which subsequent designers would have been well advised to follow, but which all too often, unfortunately, they failed lamentably to do.

It is worth noting that the valves were inclined at 100º, and that the flow value was first-class as shown by the excellent figure of horse power per sq. in. of piston area, despite the comparatively low boost.

The steady increase in valve overlap which was the logical accompaniment to increased engine r.p.m. is worth noting. Taking intervals of two years, 1922, 1924 and 1926, and using as our examples the four-cylinder Aston Martin, four-cylinder Talbot-Darracq and eight-cylinder Delage, we find that the inlet valve was opened 3º after, 94º before and 18º before top-centre respectively. The exhaust valve in the same order closed 12º, 10º and 12º after top-centre. Thus overlap increased from 9º in 1922 to 19º in 1924, and 43º in 1926. The inlet opening period rose from 217º in 1922 to 234º in 1924 and 248º in 1926.

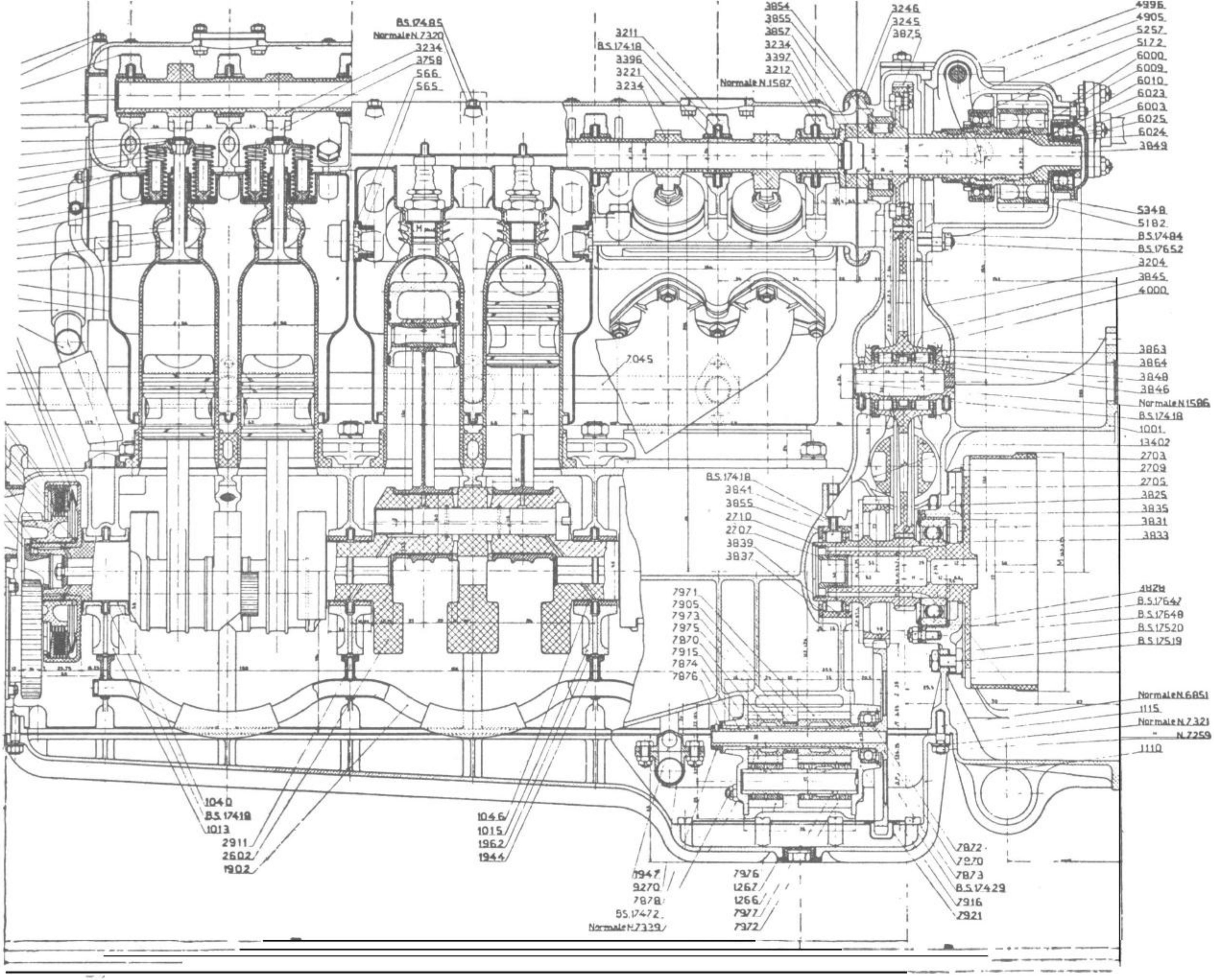

The double-six 1½-litre Fiat of 1927 had a built-up crankshaft with one-piece connecting rods, having very wide plain bearings, as shown in this 1 : 4 scale drawing. The crankshafts were geared together and the four overhead camshafts were driven by a train of gears at the back of the engine. The use of fins on the sparking plug bosses should be noted, also the multiple valve springs and the assembly of the steel cylinders into three groups of two each.

Let us consider in rather more detail the relations between the 1922 Strasbourg Aston Martin and the 1924 1.5-litre Talbot-Darracq. Both had four cylinders, and the difference in piston area was under 5 per cent, but the power per litre of the latter was nearly twice that of the former, although engine speed rose by only 20 per cent. The main gain was derived from a 60 per cent gain in m.e.p., the source of which is obvious, in that the latter engine was supercharged with 7 lb./sq. in. boost pressure. This by itself sufficed to raise the output to over 80 h.p. and the m.e.p. from 106 to 150 lb. per sq. in. and the small balance, not due directly to blowing, can be ascribed to improved inlet arrangements, for there is little doubt that the single large inlet-valve on the Talbot-Darracq had a substantially better flow-value than the two inlet-valves on the Aston Martin.

The success of four-cylinder, 1½-litre engines up to 1925 did not lessen the essential need for power units with basically greater piston area for the 1½-litre formula 1926-27. On this score, Bugatti was in a favourable position for he had his five bearing, 2-litre, straight-eight which had run in the 1925 Grand Prix, and by varying bore and stroke he was able to use the same block castings irrespective of whether the capacity was 1.5, 2.0 or 2.3 litres. The smallest size was, of course, definitely over-valved, and, as a blown type, gave much the lowest figure of h.p. per inch of valve area. It had additionally a very moderate total power, due in part to the modest boost pressure, in part to the rather poor breathing conditions resulting from the use of two small inlet and the one exhaust valve all placed vertically in the cylinder head.

From a mechanical point of view the Bugatti could have been supercharged at a much higher pressure, and the power of the 1927 type (60 x 66 mm.) could have been raised without much difficulty to the 150 b.h.p. mark if 4.25 h.p. per sq. in. of piston area had been forthcoming. Owing, however, to the well-known allergy between Bugatti cylinder heads and the cooling fluid, it is doubtful whether the casting would have remained in one piece very long if so much power had been expected, and it had always been le Patron's policy that his racing cars should not break down, even if they were slower than the other starters. But with a single-cam vertical-valved engine Bugatti could scarcely hope to compete in speed with Delage, quite apart from other aspects of the matter, such as Bugatti's continued use of a two-seater body with the driver mounted above the propeller shaft, and consequent comparatively big frontal area and moderate h.p. per sq. ft. Hence from a strictly engineering point of view the only possible challengers to the Delage were the eight-cylinder Talbots (which were in fact, just as fast, and could have been made just as reliable) and (potentially only) from the experimental two-stroke Fiat which was never raced and the " double-six " which appeared only once.

The former was laid down in 1925 after the announcement of the A.I.A.C.R. that a I½-litre formula would be in force for the years 1926-27, and was given the type number 451. The design was the responsibility of Zerbi, Treves and Sola and, as may be seen from some drawings, it was an opposed piston two-stroke with geared crankshafts, being arranged so as to stand in the chassis with one crank above the other. The standard Fiat practice of roller bearing crankshaft and big ends was employed and with a bore and stroke of 52 mm. by 58.5 mm. the 1½-litre capacity limit was attained with six-cylinder bores and 12 pistons. A Roots type blower was mounted on the nose of the crankshaft and driven at engine speed delivering pressure air to the carburetter at the modest boost of 5¼ lb./sq. in. (1.37 ata) to the inlet manifold which was connected to a series of ports uncovered by the upper pistons. The exhaust ports were correspondingly uncovered by the lower pistons and advantage was taken of the separate crankshafts to give the exhaust crank a 21 degree lead in relation to the inlet crank. This resulted in the exhaust ports being opened 36 degrees before the inlet ports and closing 6 degrees before the inlet ports were covered, the inlet ports thus being opened for 140 degrees and the exhaust for 170 degrees. In this engine the practice of using bottom seating rings was abandoned.

Although over 150 h.p. was obtained the engine suffered from two weaknesses inherent to the type. The first of these was the comparatively short duration of the inlet port opening (little more than half the angle available for the conventional four-stroke) and the second the fact that all the exhaust gases were swept over one set of pistons. Despite the use of oil cooling for the exhaust pistons there was very rapid erosion around the ring bands, this perhaps being aggravated by the somewhat weak mixtures used which resulted in a consumption of only 0.83 lb./h.p./hr. The designer thereby denied himself the advantages of internal cooling which he might have had by increasing the alcohol content of the fuel and accepting double the rate of fuel consumption.

Development work on this engine was continued through 1926 but when it became apparent that the type was not going to be a practical proposition for the I½-litre formula an alternative double-six was quickly designed, and built during 1927. This, the type 406, had two crankshafts placed side by side and geared together, there being two rows of six vertical cylinders, with a bore and stroke of 50 mm. x 63 mm., placed side by side. Fabricated steel cylinders were built up in pairs of two, but although the pistons continued to be separated from the bores by the rings there were now two pairs of rings placed in each of the three grooves.

A major change in construction of this engine was the use of plain main and big end bearings in place of the previously employed roller bearing type, and to emphasise a change of heart in the design department the eye of the big end was now made in one piece with a built-up crankshaft of the Hirth type. Both crank pins and main journals had a diameter of 40 mm. and whereas the main bearings were 30 mm. wide the big ends were no less than 41 mm. wide. The four camshafts on this engine were driven by a train of gears and by virtue of the layout there was an exhaust manifold on the outer side of each block, the Roots blower delivering to two inlet pipes running between the cylinder blocks.

Valves 30 mm. in diameter were used with a lift of 7 mm. and although the general arrangement of the engine would seem to impose a severe weight penalty, in fact it turned the scale at only 381 lb. and was eventually developed to give 187 h.p. at 8,500 r.p.m. A more normal figure showing a peak of 160 h.p. at 8,000 r.p.m. with a boost of 12½ lb./sq. in. (1.88 ata) is taken as a basis of some curves relating manifold pressure and b.m.e.p. in relation to piston speed for some engines raced in 1924 and 1927, i.e., the 2-litre eight-cylinder 60 x 87.5 mm. with Roots blower, and the twelve-cylinder Type 406 described above.

It will be noted that the general shape of these curves is similar to those reproduced in Chapter 12 but shows far more rapid falling-off than does the eight-cylinder Talbot, a significant point in this connection being that whereas the Fiat engines with pure air pumped into the carburetters showed final temperatures of the ingoing charge of 54 degrees C. at 1.6 ata. for the 2-litre, and 72 degrees C. at 1.88 ata. on the 1½-litre, the Talbot did not exceed 50 degrees C. at 1.92 ata. There can indeed be no question but that the German and Italian method of feeding pressure air to the carburetter was inferior to the American and British practice of aspirating the mixture, even with the limited manifold pressures of the middle '20s. Despite this, the fact that the twelve-cylinder Fiat engine had 20 per cent more piston area than either the Delage or the Talbot of equal capacity gave it an appreciable superiority in sustained power output and in maximum speed, although, here again, the makers' claim of 149 m.p.h. is some 10 m.p.h. higher than one would expect, even with the highest quoted output of 180 h.p. As this car made only one racing appearance it is almost impossible to relate it to the the other more established vehicles, and one can only say that in the engine design it challenged the Delage as the prime example of power per litre sought regardless of mechanical complexity and cost.

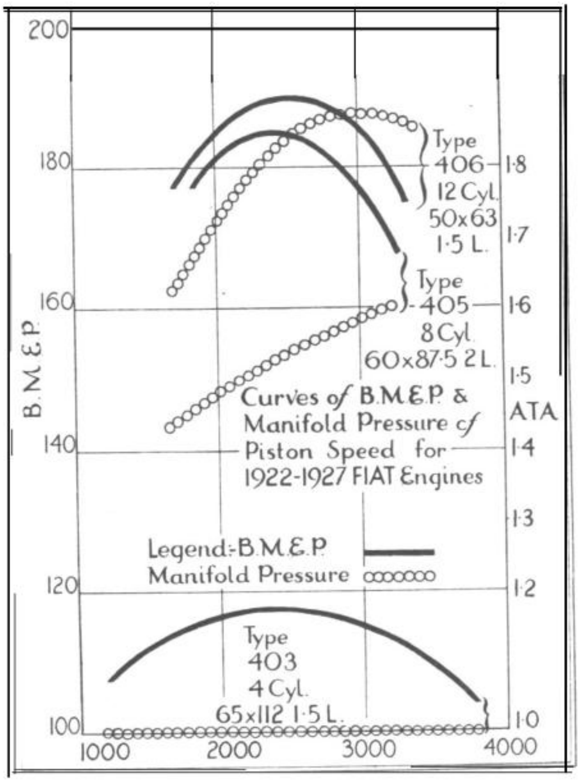

The development of brake mean effective pressures in relation to piston speed and supercharge pressure is shown in these curves, which illustrate the very big gains made between 1922 (as represented by the 6-cylinder U/S type) and the closely similar curves for the 8- and 12-cylinder models of 1924-1927.

In suspension and braking systems there is little of interest to record, and it is true to say that little, if any, progress in these features was made during the two years under review. In frame design there is no doubt that the eight-cylinder Talbot was far in advance of its time, but it is something of a paradox that although the Delage, the most successful 1½-litre car, had about the weakest frame ever put into any racing model (particularly as the designer made little use of the crankcase as a means of stiffening the front end) the road holding was quite good.

The most obvious development in chassis design during the two years 1926-7 was the off-setting of the transmission line. This, in turn, was directly inspired by the revision of regulations in 1925, whereby the car was manned by the driver alone. The result can be quickly gauged by an examination of the side elevations of the three typical Grand Prix cars which illustrate the relations of frame height, propeller shaft

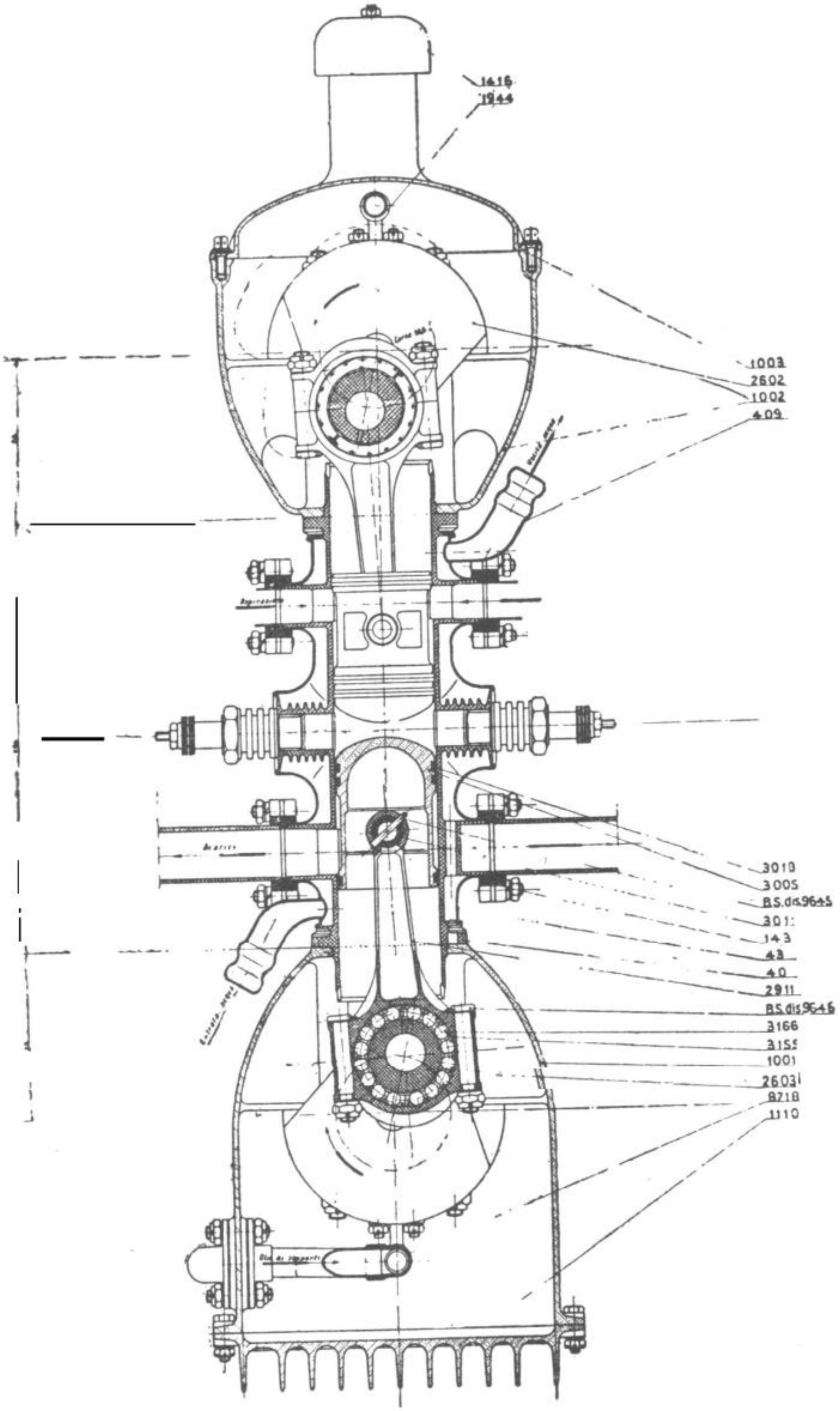

As can be seen in this drawing of the experimental Fiat two-stroke engine (scale 1 : 4) the lower piston was used to uncover the exhaust ports and cold water was fed into the base of the cylinder. The geared-together crankshafts were placed slightly out of phase so as to permit early opening and closing of the exhaust ports in relation to the inlet ports.

and scuttle height. The net result was to reduce the frontal area of the 1927 Delage to about 9½ sq. ft. as compared to just under 11 sq. ft. for the Sunbeam of 1924, which may be taken as representative of the 2-litre Grand Prix cars. Lowering the c.g. improved cornering speeds, whilst the reduction in frontal area largely (but not entirely) compensated for the decrease in horse power which followed the cutting-down of engine capacity from 2.0 to 1.5 litres.

Reduction in power as between 1925 and 1927 was considerably less than the enforced diminution of capacity, so that by reason of reduced frontal area and weight, the performance factors did not fall in proportion to the loss of b.h.p.

In 1928 and 1929 the world attained a peak of inter-war prosperity which was not reflected in technical progress with racing cars.

Fiat who had entered in every Grand Prix race (with the exception of 1913), from 1906-25, had taken almost no part in the 1½-litre formula of 1926-27, although their racing department had been busy constructing twelve-cylinder cars with both two-stroke and four-stroke engines. In 1928 work on these was abandoned and the cars were put into storage. The Sunbeam-Talbot-Darracq coalition, the component parts of which had also engaged in racing from the first Grand Prix onwards, withdrew *in toto* in 1927 and sold their cars. Delage who had entered in every event since 1913 (except 1921-22) also sold their eight-cylinder, 1½-litre, cars to private owners in 1928, and had previously disposed of the 2-litres which had won the 1925 A.C.F. Grand Prix. Alfa Romeo had taken no part in the I½-litre racing but from the beginning of 1928 the celebrated P2 models were entered in some races.

For most of 1928 works-sponsored entries were restricted solely to Bugatti, although he was joined by Maserati in 1929 and 1930. These three racing years may, therefore, be considered as a "carry forward " from the previous 2-litre and I½-litre formula, and it will perhaps put the period in proper technical perspective if we take the makes in alphabetical order and summarise their achievements.

Alfa Romeo

The P2 cars were factory owned and driven by Nuvolari, Brilli Peri, Varzi and Campari. In 1928 they won no races but Campari broke the lap record at Cremona. In 1929 Varzi won four races and Brilli Peri one, making a total of five wins. In 1930 Varzi was the only victorious driver with two wins, but Nuvolari broke the Montenero lap record.

Bugatti

Ettore Bugatti relied entirely upon the Type 35B and C cars, of 2.3 and 2 litres capacity respectively. With these he secured six wins in 1928 and made fastest laps in four races ; he had six wins and three fastest laps in 1929, and four wins with three fastest laps in 1930.

Maserati

The first product of the brothers Maserati to appear in the statistics of racing was a l½-litre straight-eight with which A. Maserati won his class in the 1926 Targa Florio. Subsequently the same type of car won the flying kilometre contest at Bologna in 1926, averaging 104 m.p.h., driven by E. Maserati. Working on a modest scale the new company did not feel able to compete against large concerns in the international

1½-litre formula, but they continued to produce interesting designs, the capacity of the eight-cylinder car being raised to 2 litres. In 1929 they built a twin-engined version of this car which put up record laps on the Cremona Circuit and on the 2.8 miles used at Monza. This sixteen-cylinder model had further success in 1930, but it was in this year the marque really found itself with a 2½-litre car which was the only really successful new model to be produced in the period under review.

Talbot

The eight-cylinder racing cars built by the S.T.D. combine for the 1926-7 formula of 1½ litres were run as a privately owned team, some of the engines being bored out to give a capacity of *circa* 1,700 c.c; In 1928 the cars secured two victories and two fastest laps. In subsequent years they were not placed in major races.

One explanation of the comparatively luke-warm interest in Grand Prix racing during this period was the very great popularity of sports car events. The regulations for these competitions prescribed catalogue-type chassis (with certain stated deviations from standard) and four-seater bodies with full equipment, including electric lighting, starter and hoods were required.

Bugatti stood somewhat aloof from this type of racing but both Alfa Romeo and Maserati supported it, as did Mercedes-Benz and Bentley. Both Mercedes-Benz and Bentley also competed in Grand Prix racing, the former with a six-cylinder supercharged engine with 7.1 litres capacity developing up to 300 b.h.p., and the latter with a 4½-litre supercharged engine developing some 240 b.h.p. The former car was fast enough to win the German Grand Prix in 1928 and the latter make beat all but one of the normal Grand Prix types in the French Grand Prix of 1930 and is, for this reason given a place in the Examples, as No. 12. With the exception of the Mercedes and the sixteen-cylinder Maserati, the Bentley had the highest engine output of any car run in Grand Prix racing up to 1930, but although the h.p. per sq. ft. of the Bentley approximated to its rivals owing to the very high weight of the car it was sadly deficient in h.p. per laden ton.

The Mercedes-Benz was a smaller car with a larger and more highly powered engine, which made it an even more formidable challenger to the Grand Prix cars in this period. The popularity of sports car racing had, moreover, an indirect reaction in that the Grand Prix Maserati was designed so that it would also be eligible in the sports car class and provision for a dynamo and electric starter was therefore included in the original design. Production cost and maintenance problems also dictated the use of plain white-metal bearings, thus reversing the precedent established by Fiat in 1921-2, since which time all successful Grand Prix cars had used roller bearings throughout.

Apart from the question of eligibility in sports car races it is essential to remember that Bugatti and Maserati, i.e. the only constructors who entered cars with works drivers, were themselves largely dependent on orders placed by private owners, who were sensitive to both first cost and maintenance problems. In these conditions it was unreasonable to expect that performance factors would increase, and statistics of record attempts show that even in the last year it was made the Type 35B Bugatti was con-. siderably slower than either the 1927 1½-litre Talbots or the 1925 2-litre Delage. The figures may be tabulated thus :

RECORD SPEEDS 1925-30

Car	*Standing Kilometre*	*Standing Mile*	*Average Kilometre to Mile*	*Maximum Mile or Kilometre*	*Date and A.I. No.*
1925 2.0 Delage . .	79.39 m.p.h.	93.68 m.p.h.	*132* m.p.h.	134 m.p.h.	11/10/25 A.I.7
1927 1.5 Talbot	81.55 m.p.h.	92.33 m.p.h.	120 m.p.h.	129.75 m.p.h.	5/9/26 A.I.10
1930 2.3 Bugatti..	79.03 m.p.h.	90.77 m.p.h.	120.5 m.p.h.	125.21 m.p.h.	19/10/30 RAC4 & RAC17

But we have seen that the 1½-litre cars achieved circuit averages slightly higher than would be theoretically expected and this difference was continued, and even increased in the case of the Bugatti. It is thus self-evident that even if engine design was stagnant, chassis design was improving. One need only compare the general layout of the 1924 Sunbeam, 1927 Delage, and Type 35B Bugatti (Examples Nos. 9, 10 and 11 respectively) to perceive that this was indeed so. In particular, the frame of the Bugatti was properly designed as a beam with a centre section 6¾ in. deep, and also strongly stiffened torsionally by the four-point mounting of the sump which was rigidly attached to the side rails. The Bugatti, light alloy, brake drum cast in one with the wheels with an inserted liner was also a great step forward in heat dissipation and in stiffness of the drum, whilst in the general art of steering and suspension layout Ettore Bugatti knew no superior until the event of the independently sprung cars of 1934 or, one might say, of 1937.

In sum, from a technical viewpoint the lessons learnt in 1928-30 were particularly concerned with chassis design and this temporarily outran engine output which was limited by considerations of production cost and maintenance in the hands of amateur racing drivers.

CHAPTER FIFTEEN

The Second Decade

THE technical progress made in the first ten years of Grand Prix racing fell into three distinct phases, but in the second decade, by contrast, design flowed steadily along certain well-marked channels. These did not exactly align with the progress made in 1913 and 1914, for the break for the 1914-18 war (and the lessons learned during this period in aviation engines) resulted in a superficial discontinuity as between 1914 and 1920. This was most noticeable in the virtual disappearance of the four-cylinder engine from international racing and the emergence of the straight-eight as the dominant Grand Prix type.

In this respect it is illuminating to list various constructors of Formula cars together with the basic engine type, thus :

FOUR CYLINDERS

Aston Martin	1922	Vauxhall	1922
Ballot	1921-2	Mercedes	1924

SIX CYLINDERS

Fiat	1923	Sunbeam	1923-5
Voisin	1923	Benz	1923

STRAIGHT EIGHTS

Alfa Romeo	1924-30	Maserati	1929-30
Alvis	1927	Mercedes	1924-5
Ballot	1919-21	Miller	1924-5
Bugatti	1922-30	Rolland Pilain	1924
Delage	1926-7	Sunbeam-Talbot-Darracq	1921
Duesenberg	1920-21	Talbot	1926-7
Fiat	1923-5	Thomas	1927

TWELVE CYLINDERS

Delage	1923-5	Fiat	1927

As a consequence of multi-cylinders, piston area did not fall in the same proportion as the successive reductions in cylinder capacity which were enforced by international regulations, and here again, the facts stand out most vividly if presented in tabular form :

Years of Comparison	*Percentage Swept Volume*	*Percentage Piston Area*	*Percentage B.H.P.*
1914 (100) - 1921	66.6	98.5	93
1921 (100) - 1924	66.6	83	128
1924 (100) - 1927	75	94	105
1921 (100) - 1927	50	73	135

It will be observed that in the face of a diminution of 27 per cent in piston area between 1921 and 1927, overall engine power rose by some 35 per cent and, keeping in mind the basic formula for power output discussed in Chapter 16, it follows of physical necessity that piston speed or mean effective pressure, or both, must also have risen.

During the first ten years of Grand Prix design piston speeds were approximately trebled and by 1914 engines were running reliably at 3,000 ft./min. Between 1920 and 1930 the increase was on a much smaller scale. A speed of 4,000 ft./min. was reached in exceptional cases, but it is doubtful if this could be sustained with reliability, and 3,500 ft./min. is a more reasonable figure to accept. In other words, the doctrine of the pioneer designers that engine output would be limited by piston speed was in principle correct, although the maximum figure has proved itself to be nearly four times greater than the thousand ft./min. upon which the arguments of 1902-6 were based. Whereas, however, on the 1914 four-cylinder engines the stroke was between 150 and 165 mm. (giving an approximate equality between the figure for piston and crank speed) by 1927 piston strokes had been halved and r.p.m. raised to *circa* 7,000 r.p.m. on the most highly developed engines.

It is not uninteresting that this change was accompanied by a positive and relative increase in the weight of the " reciprocating " parts, i.e. piston and connecting rod. As shown in Chapter 18 these parts weighed some 0.66 lb. per sq. inch of piston area on the first Grand Prix engines, but this figure was drastically reduced in the ensuing ten or so years by the employment of light-alloy pistons, by more careful stressing of the connecting rods, and the use of higher grade materials. On the 1908 basis, for example, the weight of an individual connecting rod and piston of the 1920 Ballot engine would have been about 3.1 lb. ; it was, in fact, only 1.03 lb.

From 1924 onwards increasing attention was given to the stiffness of the connecting rod and dissipation of heat from the piston, and for both reasons a greater mass of material was required. Hence, on the 1927 Delage the weight per sq. in. was 62 per cent greater than on the 1921 Ballot and only 46 per cent less than on the typical 1908 engine.

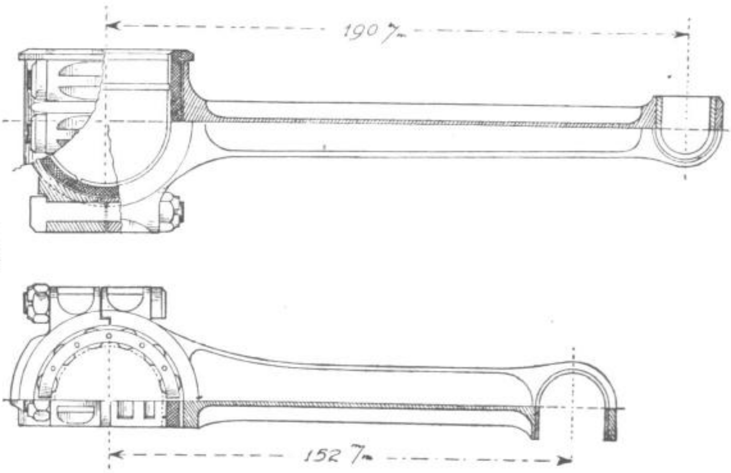

The 1927 Delage connecting rod (lower) shown to the same scale as the 3-litre Ballot rod.

From 1920 onwards light-alloy pistons were universally employed in racing cars, but experiments with cut-away slipper type pistons and magnesium alloys were not successful. Cast Y alloy pistons proved the most suitable, although in France it became common to use metal moulds and silicon alloys despite the small quantities made. On high speed engines it was discovered that narrow (2 mm.) piston rings were most effective, and they were commonly placed fairly well down the piston to give protection from heat.

With the exception of the Maserati, introduced just before the end of the second decade, all the successful cars from 1922 onwards used roller bearings for the crankshaft and big ends, which tended in itself to increase the weight of the rod.

Light-alloy cages were used for the rollers, increasing attention was given to the stiffness of the bottom half of the big end, and it was normal to use a one-piece crankshaft with split races for both mains and big ends. This construction necessitated supremely accurate machining and assembly, but there was probably little difference in this respect from one-piece rods with a built-up shaft, as used by Vauxhall in their T.T. car and on the Type 35 Bugatti. With these two exceptions it was usual to split the crankcase on the centre line of the shaft, an arrangement giving good transverse stiffness.

All these roller bearing engines ran with extremely low oil pressures, oil normally being fed by jets into grooves cut round the crank webs and thence travelling under centrifugal force into the big ends. The large volume of oil thus freed in the crankcase made it imperative to use baffles at the base of the cylinder block in order to prevent excessive consumption and plug fouling. Dry sumps, scavenged by a separate pump, became almost universal.

Another feature common to all successful Grand Prix cars of the period (again with the exception of Maserati) was a detachable cylinder block with integral cylinder head. The French constructors, Delage and Bugatti, relied upon iron castings, Bugatti embracing four bores in one unit ; Delage six in one bank of the V12, 2-litre, and eight-in-one-piece with the later 1½-litre model. These blocks were extraordinarily fine examples of the foundrymen's art, and Delage in particular showed a very careful arrangement of water passages together with ample means for eliminating sand from the casting.

The Italian constructors followed the construction initiated by Mercedes in 1913 and used forged steel barrels with ports built up by welding. Sheet metal water jackets enclosed units of two or three bores. Sunbeam and Talbot, designed under the Italian influence, also followed this practice.

Both the Italian school of design and Delage in France used two valves per cylinder inclined at between 96 and 100 degrees, and in this respect there was, after 1922, a complete departure from the previously popular arrangement of having four valves per cylinder at an included angle of approximately 60 degrees.

It is worth examining this change in some detail, as " breathing " is an all-important quality in the racing car engine, and, irrespective of manifold pressure, it is fundamentally determined by the flow values through the valve ports. From this point of view probably the most efficient four-valve engine ever built was the 1922 T.T. Vauxhall in which the inlet valve area equalled 43 per cent of the piston area, and the output per sq. in. of valve area amounted to 9.7 h.p.

The 1924 Sunbeam was an example of the wide angled, two-valve per cylinder, construction in which the inlet valve was made as large as possible, and the valve area on this car was 38 per cent of the piston area, a good deal better than on the 1927 Delage, for which the figure was only 30 per cent. Hence, at best, the two-valve engine suffered from a reduced ratio of valve : piston area, but this was offset by careful port design, and less gas friction as a result of having only one guide and stem instead of two per cylinder. In consequence, at a common piston speed of 4,000 ft./min., the output per sq. in. of valve area on the 1927 Delage engine was 90 per cent greater on the 1922 Vauxhall, although the manifold pressure had only increased by 50 per cent, from 1.0 to 1.5 Ata.

Increased valve overlap and the extension of the total period of inlet valve opening also contributed to the increased effectiveness of a given valve area.

On the 1922 six-cylinder Fiat the inlet valve opened at top-dead-centre and closed 50 degrees after bottom-dead-centre, so that it had a total opening of 230 degrees. On the 1927 Delage the inlet valve opened 18 degrees before top-dead-centre and closed 50 degrees after, a total opening of 248 degrees. On the 1924 Sunbeam the inlet valve opened 10 degrees before top-dead-centre and closed 62 degrees after bottom-dead-centre with a total dwell of 252 degrees.

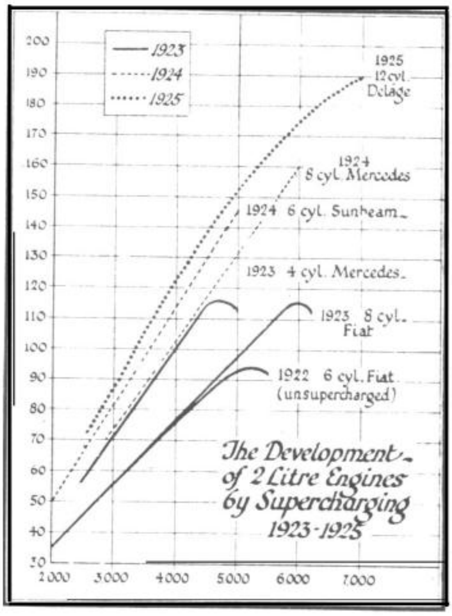

Perhaps even more important from the viewpoint of sustained power at high r.p.m. was the increase in valve overlap on each side of top-dead-centre, for this powerfully influenced scavenging and the total weight of fresh charge passed into the cylinder.

On the 1922 Fiat the exhaust valve opened 50 degrees before bottom-centre and closed 10 degrees after top, the overlap on this engine being, therefore, only 10 degrees.

On the 1924 Sunbeam the same opening point was used, but five degrees were added to the exhaust closing point, so in conjunction with the earlier opening of the inlet valve the overlap was 25 degrees. On the 1927 Delage the exhaust opened 58 degrees before bottom-dead-centre, and closed 25 degrees late, the overlap (vis-à-vis the inlet valve) being 43 degrees.

Bugatti, perhaps more than any other constructor, took great care to fully evacuate the exhaust gases. He made the area of the single exhaust valve 20 per cent greater than that of the dual inlet valves and used two four-branch pipes from the exhaust manifold, each of which was brought to a centre-point in such a way as to give extractor effect as between the discharge of one cylinder and another. Unfortunately, by using vertical valves and somewhat crude inlet manifolds, Bugatti lost on one side of his engine much of what was undoubtedly gained on the other, and it is, therefore, difficult to make a direct comparison between his design and the more usual inclined valve type.

The replacement of natural by forced induction in 1923 was the biggest single step towards a divorce between engine size (irrespective of standards of measurement) and developed h.p. When Mercedes and Fiat had shown that supercharging was a practical proposition there were many who held that it should be excluded because it violated limited capacity regulations, as undoubtedly, in strict logic, it did. Others claimed that the designer should be free to explore every method of raising power, and that if added charge weight were illegal, so also were added r.p.m., for both in effect were merely a means of increasing the air consumption per minute.

It is a matter of record that after 1914 there was no interference in the development of the supercharger, nor even a handicap imposed upon it, and the advantages of using increased manifold pressure proved to be so great that one may reasonably ask why blowers were not used experimentally before 1923.

It is problematical whether the earlier engines with cast-iron heads and ferrous pistons would have been capable of withstanding the additional thermal loading imposed by supercharging, and significant that the first successful, blown, road racing cars all had welded steel cylinder construction. A comparison of the cross-sections reproduced of 1913 Peugeot, 1914 Vauxhall and 1922 Aston Martin cylinder heads with the 1926-7 Talbot and Delage designs shows the very big improvement embodied in the latter.

The designers of the '20's did not resort to such expedients as directed high velocity water and internal cooling by excessively rich alcohol mixture, but they soon found that added engine power could be obtained by using alcohol fuels to reduce manifold temperature. An example showing a gain of 5 per cent has been quoted on an earlier page, and this in turn followed upon the discovery that petrol-benzol mixture induced through the blower had a similar effect and by itself would produce a gain in power of some 20 per cent, as mentioned in a previous chapter. Thus test bench results indicated that a supercharged engine, aspirating alcohol fuel through the blower, would develop 26 per cent more power than the same engine, mechanically unchanged, but supplied with pressure air to a carburetter fed with petrol.

Early diverse opinion about types of blowers soon gave place to unanimous acceptance of the Roots type with two or three paddles. Centrifugal blowers proved admirably suited for high speed tracks, e.g. Indianapolis in the U.S.A., and also on road courses suitable for very high average speeds, such as Monza (as witness the 1925 performance of the Duesenberg), but on real road circuits, the pronounced drop of the b.m.e.p. curve characteristic on centrifugal supercharged engines made the type wholly unacceptable.

The positive displacement blower with internal eccentric mounted drum and sliding vanes, although an efficient air compressor, proved mechanically incapable of surviving the severe conditions of road racing and after early experiments by both Mercedes and Fiat, this type was abandoned. The simplicity and robust construction of the Roots blower (which needed no positive lubrication in the pumping chamber apart from 1 or 2 per cent of oil mixed with the fuel), its light weight and ability to run at engine speed, put it in an unchallengeable position, despite admitted inefficiency as an air pump at over 10 lb. contra pressure. This was masked by relatively low supercharge pressures, for until 1930 no designer had used more than one atmosphere boost.

We can summarise gains in specific engine output of 1920-30 as follows :

B.H.P. per Litre	*B.H.P. per sq. in. of piston area*	*B.M.E.P.*	*Piston Speed*	*R.P.M.*	*Manifold Pressure*
I.0 : 3.15	1.0 : 1.80	1.0 : 1.59	I.0 : 1.14	10 : 1.70	1.0 : 1.90

As a direct consequence of aspirating through the blower, the practice of using more than one carburetter fell into desuetude. A single instrument with barrel-type throttle became normal with Italians using principally Memini and other countries' Solex instruments. Fuel was supplied by air pressure.

Experimental use of battery and coil ignition in the period 1920-2 gave way to the almost universal employment of Bosch magnetos supplying current to KLG 18 millimetre sparking plugs with mica insulation.

Chief progress in the transmission of power from the engine to the rear wheels lay in the unit construction of engine and gearbox, but here again Bugatti held to the heterodox and continued to mount the gearbox separately in the centre of the frame.

Duesenberg demonstrated in 1921 that a three-speed gear was no bar to success in road racing, and Louis Coatalen, always quick to observe new trends in design, saw to it that a similar box was always used on the Henri-designed 2-litre Sunbeams of 1922. In the smaller engined car this experiment was not a success, and Sunbeam reverted to four-speed gearboxes from 1924 onwards. The only exception to this number of gears amongst European cars were the twelve- and eight-cylinder Delages, which used a geared-up fifth speed ; a practice initiated by Delage in 1913 which was especially appropriate to the very high speed, supercharged engines produced between 1925 and 1927, for it was possible to take full advantage of, so to speak, an emergency power output at 8,000 r.p.m. on direct drive and yet to relieve the engine from unnecessary stresses by reducing speed to some 6,700 r.p.m. on long straights. It will be obvious that such transmission introduces complications when evaluating performance factors, and for this reason the tabular data for the 1927 Delage has double entries.

No clear-cut superiority can be awarded to the rival arrangements of torque tube and Hotchkiss drive. The Italian designers favoured the former ; the French, the latter, with Bugatti compromising by using an open propeller shaft, two universal joints, plus torque and radius arms..

In the physical construction of the rear axle it became the general practice to employ a steel or light-alloy housing, split vertically, for the bevel gears and differential pinions; and to bolt thereon steel tubes enclosing the half shafts. Semi-floating axle shafts were used, and although these had the disability that breakage of a shaft meant the loss of complete hub and wheel, there were gains in respect of lightness and mechanical simplicity.

Weight of axles and brake gear both fore and aft was, at this stage of racing car design, proving a very serious problem. In particular, adding cast-iron brake drums of 14 in. diameter to the front axle raised the unsprung weight at a time when total weight was falling both by reason of chassis design and also by the elimination of the weight of the mechanic from 1924 onwards. All-up starting line weight was reduced from 23 cwt. to 18 cwt. between 1921 and 1930, and assuming that the total mass of the unsprung parts remained 5 cwt., the ratio of the sprung : unsprung masses fell from 3.6 : 1 to 2.6 : 1 ; that is by nearly 30 per cent. Simultaneously, maximum road speed rose by about 16 per cent, giving rise to an increase in the inertia loading due to impacts from an uneven road surface of some 35 per cent.

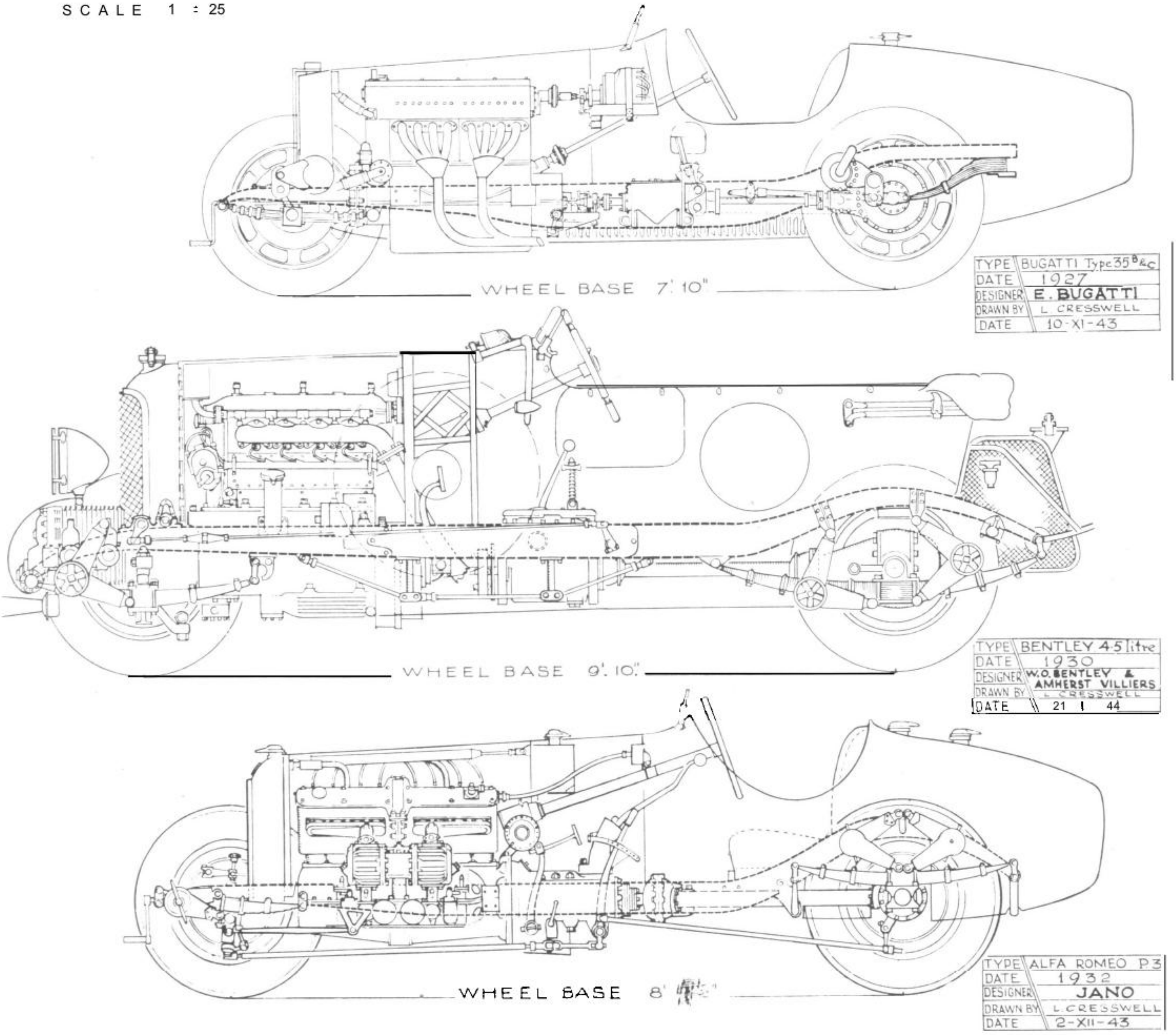

Road holding and control were thus attacked by two enemies at once, and designers resorted to the expedient of reducing spring rates and using such a high degree of friction damping that wheel movement was almost imperceptible except under very heavy impacts, With a suitably stiff chassis, as on the Bugatti, this gave tolerable road holding at the expense of a very hard ride which inflicted considerable physical punishment on the driver. Contrary, therefore, to popular opinion the light 2-litre and 1½-litre cars of 1925-30 were more difficult, and tiring, to drive than the exceedingly large cars with very light axles which were constructed in the first decade of motor racing.

With the exception of Bugatti, all constructors used Hartford shock absorbers of the scissors pattern, and in many cases two pairs were used on each side of the front axle. Additionally the springs were frequently bound with cord further to increase the friction damping available.

Steering gears showed little change in the period under review, worm and wheel mechanism giving approximately 1¾ turns of the steering wheel over full lock of the road wheels being employed almost universally.

As regards the brakes themselves it may be said that the '20's were the heyday of the mechanical braking system with full compensation and servo operation.

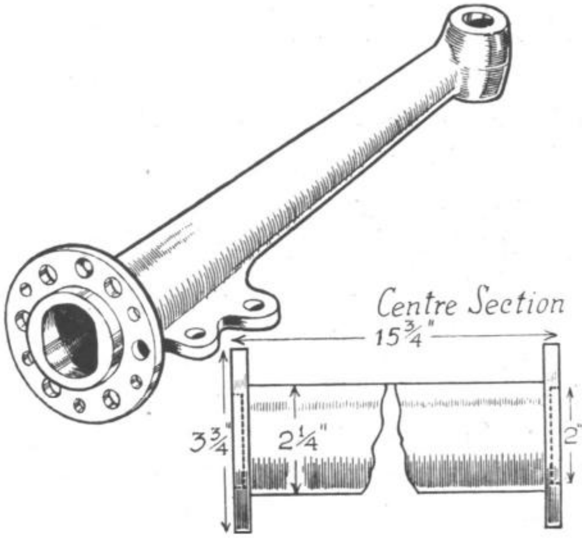

The drawing shows the unusual front axle of the Delage which was made up in three sections and bolted together.

Although the application of equal unit pressures between lining and drum on all four wheels does not necessarily produce even braking effort, designers took it as a *sine qua non* that such equal pressures must be sought. Bugatti achieved them with great simplicity by employing chains running over sprockets to give a fore and aft balance and a miniature differential gear to compensate as between one side of the car and the other.

Other engineers resorted to considerable mechanical complications and accepted the use of cables running over small diameter pulleys which led to low mechanical efficiency as between the pedal and the brake cams. Additionally, owing to the high rate of wear on the somewhat primitive brake linings used at this time it was imperative to avoid a high mechanical advantage. In these circumstances the provision of servo aid was a matter not of choice but of necessity.

It became usual to connect the brake pedal to expanding shoes in a drum driven off the back of the gearbox, the reaction of this drum being used to apply the main braking system, but contemporary reports of motor racing, nevertheless, make constant references to deterioration of braking power as races went on, and there is no doubt that at this period brakes were a limiting factor in circuit speeds. Here again Bugatti achieved substantial advantage over his rivals by using a single light-alloy casting for both wheel and drum. This very much improved heat dissipation from the drum and conferred great stiffness. Additionally, when the wheels were changed the shoes were exposed, and it was possible to put in newly lined shoes during the course of a race. This not only restored the braking power of the car ; it also encouraged drivers to make the best possible use of the brake mechanism during the early stages of the event and permitted record breaking laps to be put up without fear of subsequent penalty,

Race averages also benefited from improvements in tyre construction and the beaded edge type was replaced by straight-sided tyres. There was also a trend towards smaller rims and overall diameters, the latter falling from 32 in. to 30 in.

The success of the 1922 Fiat served to set a style in body design which persisted for more than ten years and which entirely superseded the two previously popular shapes. Up to 1913 the typical racing car body had consisted of two seats, behind which were placed a cylindrical fuel tank and one or two spare wheels mounted athwart the car. The 1914 Peugeot embodied a long cigar-shaped tail which was copied by all the entrants in the 1921 Grand Prix and by almost all in the 1922 Grand Prix. In the latter year, however, Fiat ran with a triangular, flat-sided, tail, and, with the exception of unsuccessful streamlined deviations by Benz, Bugatti and Voisin in 1923, the Fiat *motif* was adhered to throughout the whole of the second decade.

In 1925 and 1926 two-seater bodies were required, but the driver only formed the crew, and what constituted a mechanic's seat could be somewhat liberally interpreted, including a metal cowl over half the cockpit. In 1927, and onwards, no second seat was called for, and Talbot and Delage cars, specifically designed for 1926 and '27 racing, had offset propeller shafts which permitted a marked reduction in the height of the driving seat. As shown in an illustration, this led directly to a reduction in frontal area of about 15 per cent. It should, however, be put on record that this method of reducing frontal area was unique, for the precedent they established was not followed either in the closing years of the second decade or (with one exception in 1939) thereafter.

We have seen that potential lap speed increased by about 12 per cent in the six Grand Prix races held between 1906 and 1914, an average of 2 per cent per annum. This rate of increase was almost exactly sustained during the second decade during which the average speed index *vis-à-vis* the 1906 Grand Prix Renault rose to 132. On a direct derivation of the formula which suggests that average speed index varies as the square root of maximum speed, one would thus expect that cars of 1930 would have a maxima of some 147 m.p.h., taking into account the influence of front wheel brakes. The writer has suggested that these by themselves improved circuit speeds by some 5 per cent ; but allowing for this the theoretical maximum speed of the 1930 car overstates the speed actually realised by some 10-12 m.p.h. We must, therefore, infer that apart from the use of front brakes, improvements in chassis design made during the second decade of motor racing, were the equivalent of an added 10 m.p.h. in maximum and thus worth a gain of 25 per cent in engine power.

This gap, between the average speed to be theoretically expected and that attained in practice, widened in the first two or three years of the third decade of racing, but the implications of this fact are more properly left to the ensuing chapter.

STATISTICS FOR RACING CARS, 1920-1930

	1920 *Ballot*	1921 *Duesenberg*	1922 *Vauxhall*	1922 *Fiat*	1924 *Sunbeam*	1924 *Fiat*	1925 *Delage*	1926 *Talbot*	1927 *Fiat*	1927 *Delage*	*1929* *Bugatti*	*1930* *Bentley*
Cylinders	8	8	4	6	6	8	12	8	12	8	8	4
Bore M/M	65	63.5	85	65	67	60	51.3	56	50	55.8	60	100
Stroke M/M	112	117	132	100	94	87.5	80	75.5	63	76	100	140
S/B Ratio	1.73	1.84	1.55	1.54	1.4	1.45	1.55	1.35	1.26	1.36	1.67	1.4
Engine capacity CM^3	2960	2950	2996	1991	1988	1980	1984	1485	1434	1488	2261	4486
B.H.P.	107	115	129	92	138	146	190	145	160	170 (142)	135	240
R.P.M.	3800	4250	4500	5200	5500	5500	7000	6500	8000	8000 (6500)	5300	4200
B.H.P. per litre	35.7	38.5	43	46	69.5	73	95	97	107.5	113 (94)	58.7	53.5
B.M.E.P. lb./in.^{2}	122	113	125	115	170	169	175	194	175	177 (190)	134	165
Piston Speed ft./min.	2800	3270	3900	3420	3400	3150	3700	3230	3320	4000	3500	3860
Piston area sq. in.	41	39.3	35.2	30.8	32.9	35.1	38.7	31	36.6	*30.4*	*35*	*48.5*
H.P. per sq. in. piston area	2.64	2.93	3.66	3	4.2	4.66	4.9	4.68	4.5	5.6 (4.65)	3.85	4.95
Piston area sq. in. litre	13.4	13.3	11.8	15.4	16.5	17.5	19.3	20.8	24.3	20.4	15.2	10.8
Inlet valve area sq. in.	17.5	12	13.3	11.2	12.5	13.4	12		13.2	9.3	10.10	13.6
H.P./sq. in. inlet valve area	6.1	9.6	9.7	8.1	11	10.9	15.8	—	10.1	18.3 (15.2)	13.4	17.7
Rod and piston weight lb./cyl.	1.03	1.15	1.7	—	2.15	—	—	—	—	1.38		
Weight of rod and pistons per sq. in.	0.22	0.232	0.195	–	0.392	—			—	0.356	—	—
Induction system	Ata.	Ata.	Ata.	Ata.	1.47 Ata	1.6 Ata	1.5 Ata	1.95 Ata	1.9 Ata.	1.5 Ata	1.66 Ata	1.82 Ata.
Frontal area sq. ft.	12	*12*	14	12.2	10.8	*11.0*	11.0	*9.5*	*9.5*	9.5	10.8	17
H.P. per sq. ft.	9.3	*9.75*	9.3	7.6	12.7	*13.25*	17.3	*15.2*	*16.8*	18 (14.9)	12.6	14.2
Weight cwt. (1 cwt.= 112 lb.)	18	*18*	22.5	13	15.7	*14.0*	*16.0*	*14.5*	*14.0*	15.8	15.1	38
Weight cwt. with crew and fuel	23	*23*	27	18	20.7	*19.0*	*21.0*	*18.0*	*19.0*	19.3	18.5	41.5
Engine litres per laden ton (2,240 lb.)	2.6	*2.6*	2.22	2.22	1.87	*2.1*	*1.92*	*1.66*	*1.58*	1.56	2.5	2.17
Engine B.H.P. per laden ton (2,240lb.)	93	*100*	*95.5*	103	128	*1.54*	*182*	*163*	*168*	177 (142)	146	116
Max. road speed : m.p.h.	112	114	112	106	125	*136*	134	130	*135*	128	125	130

Notes.-The 1927 Delage engine output figures are “ corrected ” to 142 b.h.p. at 6,500 r.p.m. for continuous operation.
The 1922 Fiat figures are as obtained at Strasbourg ; as at Monza all the output figures should be raised by 16 per cent.
Figures in italics are estimates or derivations therefrom or makers’ claims.

CHAPTER SIXTEEN

End of the Beginning

BY 1930 three facts were clear to all engineers engaged in the construction of racing cars. These were :

(a) The 2½-litre Maserati was the fastest car yet built on a road circuit.

(b) The margin of Maserati supremacy was such that it could not be successfully challenged by minor modifications to existing designs.

(c) Improvements in roadworthiness appeared to offer an opportunity to increase engine power above existing figures, which had been more or less static for the past five years.

The International formula for 1931 proved in the end to be simply an obligation to run races for ten hours. Designers were free to fit any size of engine, and 1931 was thus the fourth successive year in which no limit had been placed on swept volume.

In 1929 the brothers Maserati had built a car in which they installed two 2-litre eight-cylinder engines coupled together. They ran it first in the 1929 Cremona Prize and although failing to win it lapped at the somewhat startling speed of 124.4 m.p.h. and was timed over 10 kilometres at the astonishing velocity of 152.9 m.p.h. In 1930 the car won the Tripoli Grand Prix which, it should be noted, was not yet run over the later, and better known, Mellaha Circuit, and although later in the year at Monza the car was beaten by two 2½-litre Maseratis it had demonstrated the possibilities of cars powered with engines of 1914 capacity with 1924 power per litre.

In 1931 both Alfa Romeo and Bugatti decided to build along these lines. The former company followed Maserati practice most directly by installing two six-cylinder supercharged 1,750 c.c. engines into one frame, but as mentioned in Volume I each engine retained its own transmission system complete from clutch to bevel gears. Largely in consequence of this, the all-up weight was nearly half as much again as corresponding single-engine cars, so that although there was some 220 b.h.p. under the bonnet the car was not particularly successful.

This model ran twice at Monza, firstly in the European Grand Prix from which it retired at the end of two hours when running in third position, and three months later in the Monza Grand Prix in which it made fastest lap of the day but never reached higher than third position. The lap speed was some 1½ m.p.h. faster than that put up by the 2½-litre Maserati on the same circuit in the previous year.

Bugatti, also, introduced his version of the big capacity car in the 1931 Monza Grand Prix and it took the form of a large straight eight, with bore and stroke 86 x 107 mm. and 90 degree valves operated by twin overhead camshafts. With characteristic ingenuity Bugatti contrived to fit this engine into a chassis (Type 54) virtually identical with the Type 35, and for some reason he decided to combine a three-speed gearbox with the rear axle. This had a 3.46 : 1 final ratio and 32 x 6 tyres, making the car run at 26½ m.p.h. at 1,000 r.p.m.

Exact figures are lacking, but it is improbable that the engine could exceed 5,250 r.p.m. with a corresponding maximum road speed of just under 140 m.p.h. With perhaps twice as much power as the previous Type 35 the acceleration of the car was outstanding but the three-speed gearbox was a handicap and the additional engine weight undoubtedly sullied the superlative road holding characteristics which had served Bugatti so well during the previous five years.

Monza was the only race in 1931 in which the Bugatti appeared (and any chance it had was ruined by tyre failures), but the sixteen-cylinder Maserati ran twice, winning the Rome Grand Prix for the second year in succession. At Monza it was slower than the smaller cars from the same factory.

In the ensuing year of 1932 Alfa Romeo abandoned development work on their double six, but both Bugatti and Maserati continued with their big cars. The latter made fastest lap on the A.V.U.S. track at the beginning of the year and poor pit work alone stopped it from winning the Italian Grand Prix at Monza in June, 1932. Denied first place by a stop of over three minutes Fagioli nevertheless put in a lap at 112.22 m.p.h., that is to say over 7 m.p.h. higher than the previous record speed.

By comparison the Type 54 Bugattis were very disappointing. They won no race, they broke no lap records, and although fast in the early stages of both the Italian and French Grands Prix they appeared to tire their drivers and be ineffective racing machines.

In sum, attempts to combine larger than 3-litre engines developing 220 b.h.p. or more in a chassis with conventional axles were a failure. Bugatti persevered with his Type 54 until 1933, and won the A.V.U.S. race in that year together with a fast lap at Monza, but the real racing successes in the years 1931, ‘32, and ‘33 were scored by cars with 2-3 litres capacity and 150-200 b.h.p. which were direct developments from the immediately preceding eight-cylinder models.

Maserati, of the three leading constructors of Grand Prix cars in 1931, made the least change, contenting themselves with increasing the capacity of their straight-eight engine from 2½ to 2.8 litres by enlarging the cylinder diameter.

Bugatti also changed but little externally so that the difference between the 1931-2 Type 51, 2.3 litre car and the preceding Type 35 models was impossible to detect. But although the chassis remained virtually identical the engine received a new cylinder block, the integral head of which carried two valves inclined at 90 degrees operated by two overhead camshafts. There is good reason for believing that the port shape and general layout of the valve gear was strongly influenced by the American Miller eight-cylinder engines, but, be this as it may, the engine had a typical Bugatti appearance with square section cam boxes.

The supercharger remained on the side of the crankcase, as on the Type 35, but the inlet manifold was changed giving a more direct passage from the blower to the ports. The improved breathing afforded by the new head raised the power output of this engine by about 25 per cent and this in turn led to a useful increase in maximum speed and acceleration.

These improvements coupled with fine road holding and great reliability gave Bugatti a highly successful year.

In contrast to Maserati and Bugatti, Alfa Romeo produced an entirely new car in parallel with their twin six. This had a 2.3-litre eight-cylinder engine which, as mentioned in Volume I, had many features in common with their existing six-cylinder 1,750 c.c. sports car engine and was itself used as the basis of a catalogue sports model in later years. It may be doubted whether this engine developed more power than the earlier roller bearing, steel cylindered 2-litre P2, but it almost certainly had better low end performance and was installed in a far more robust chassis with large diameter brakes. Hence, whereas in 1930 the inability of the six-year-old P2 to keep pace with the 2½-litre Maserati had been abundantly proved, in 1931 the 2.3-litre Monza was a definite competitor with the developed 2.8-litre Maserati.

In all three cars the driver sat on the right-hand side of the frame in a body of two-seater shape with one side cowled over. The space which would normally be occupied by a mechanic was often utilised for spare fuel tanks or oil tanks.

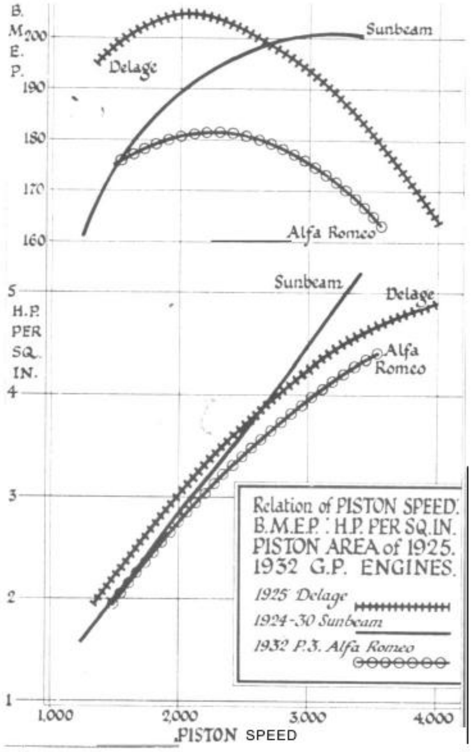

These selected output curves show that on absolute bases (H.P./sq. in. and B.M.E.P. cf. piston speed) engine design was static from 1924 to 1932.

The P3 Monoposto Alfa Romeo was a single engined model directly developed from the twin engine car built in the previous year. As on the Twin Six the driver was positioned centrally and the single engine and gearbox were joined to a double propeller shaft system, the elements of which are illustrated. The engine was basically similar to the Monza, the bore being unaltered but the crank radius being increased from 44 mm. to 50 mm. so that the capacity was raised from 2.3 litres to 2.65 litres. Additionally, the inlet system was removed from the right-hand side of the engine and mounted on the left-hand side and two blowers were used each feeding one bank of cylinders. As shown in the Example No. 13, Volume I, the basic performance factors for this car were considerably higher than anything hitherto known ; the h.p. per laden ton was 18 per cent more than on the Type 51 Bugatti and the h.p. per sq. ft. of frontal area 28 per cent greater.

Engine performance was not in itself outstanding whether it be judged on the basis of h.p. per litre, square inch of piston area, or b.m.e.p. On a power per litre basis the engine shows a marked regression as compared with the roller bearing, steel cylinder power units of the 1923-7 era, but on the absolute basis of comparison one sees simply that performances had remained static for nigh on ten years. We can, for instance, make an interesting study of the 1926 Talbot, eight-cylinder, 1½-litre car, and the Alfa Romeo engine, thus :

BASIC PERFORMANCE FACTORS OF 1926 I½-LITRE TALBOT AND 1932 P3 ALFA ROMEO

	1926 Talbot	*1932 Alfa Romeo P3*
R.P.M.	6,500	5,400
Piston Speed FT./MIN.	3,230	3,550
H.P. sq. ins. Piston Area	4.68	4.65
B.M.E.P.	194	172
Manifold Pressure Ata	1.95	1.6
H.P./Litre	96.5	71.5

The Alfa Romeo gave 2 per cent less power per sq. in. of piston area running at a 10 per cent higher piston speed with 15 per cent less boost, so clearly the degree of skill put into the design was the same in both cases. But the later engine was deliberately conceived as a compromise between size and weight, required power and ease of construction and maintenance, whereas, if the layout had been projected along the genealogical lines of the 2 and 1½-litre limit engines, we should have seen either a 200 h.p. 2-litre, eight-cylinder engine running at 6,500 r.p.m., or a 2.65litre, twelve-cylinder developing some 270 b.h.p.

The construction of such engines was, indeed, advocated by a number of persons in the Alfa Romeo Racing Department but considerations of cost and time determined Jano to rely on the concept that racing car engines must bear a close resemblance to the production power units which were being built in quantities in the works at the same time.

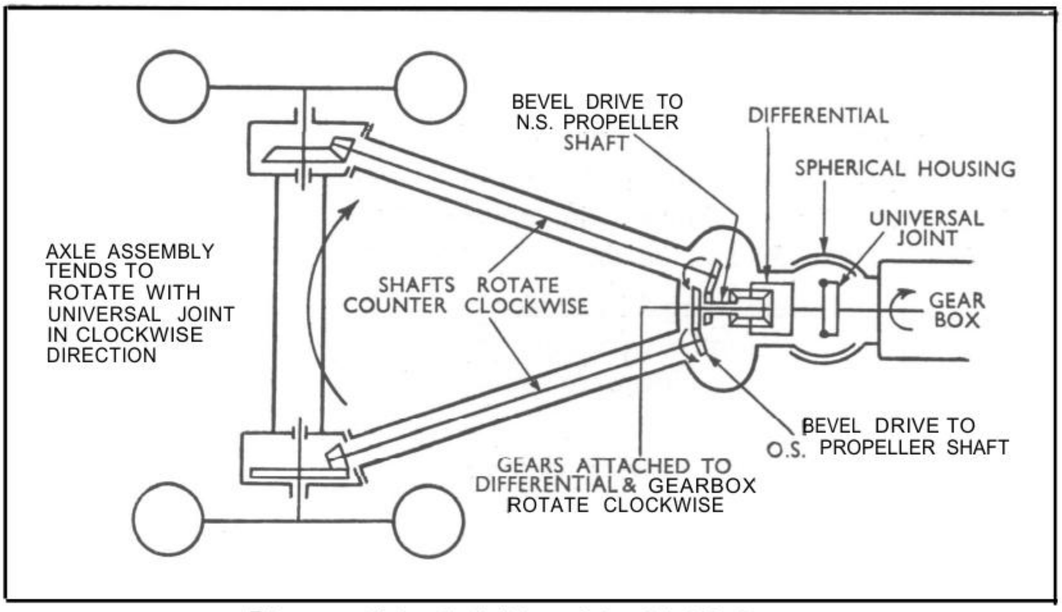

Diagram of the final drive of the P3 Alfa Romeo

An examination of the P3 chassis design shows that the designer had introduced many details promoting high average speeds. The front axle was located by a radius rod to prevent negative castor angle under heavy braking, and the brakes themselves were of exceptional diameter, giving 380 sq. in. of brake drum area per ton as compared with 294 sq. in. on the Bugatti and 270 sq. in. on the 1927 Delage. A four-point engine mounting promoted stiffness of the frame at the front end and the mounting of the rear springs was, as shown in the side elevation of the car, so disposed as to give an exceptionally high roll centre with improved stability.

The unusual construction of the rear axle offered certain benefits which may have been noticed on the road at the time but concerning which theoretical work has only been started some 15 years later. Recent research on cars fitted with conventional axles shows that if rear wheels are rotated on large diameter rollers with cams attached there is a marked pre-disposition to " hop " with each wheel hub traversing an ellipse. If the weight represented by the central bevel housing be redistributed close to the hubs this " hopping " tendency is eliminated and this is, of course, precisely what was done in the design of the P3 Alfa Romeo.

For differing reasons one would, therefore, expect both the front and rear wheel adhesion of the P3 to be a marked improvement upon previous designs and it is in these qualities that the merit of the car primarily resides.

But both the 1931 2½-litre Maserati and, even more, the 1933 bored out 2.9-litre edition of the same year also had a higher lap speed index than would be expected and the latter was nearly as fast as the P3 Alfa Romeo-when driven by Nuvolari it was faster.

In 1933, Maserati followed the example set by the P3 Alfa Romeo and brought out a car with central driving position and, *inter alia,* hydraulic brakes. The change in body form certainly reduced frontal area and as compared with the 2.65-litre P3 engine the Maserati probably developed an additional 15 or 20 b.h.p.

This notwithstanding, no more than 194 b.h.p. per sq. ft. can be ascribed to the Maserati and the coincident theoretical maximum speed of 145 m.p.h. gives an average index on paper of not more than 132, six per cent less than it achieved.

There was no correspondingly noticeable change in basic design and we must, therefore, ascribe this phenomenon to a general improvement in chassis layout coupled with undoubted strides made in the design of two important components viz. : tyres and brake linings. Up to 1925 tyre sections and pressures remained changed but little. Overall diameters fell from 35 in. to 30 in., cross sections rose from 4½ in. to 5½ in., with pressures lying between 50 and 60 lb.

In 1930, Bugatti were using 5 in. section tyres with an overall diameter of 29 in., and two years later Alfa Romeo were equipped with 5½ in. section tyres with 28 in. diameter. These increases in section were coupled with decreases in pressure, the figure dropping to 35/40 lb.

Due to the stiffness of springing systems the tyre played an important part in absorbing road shocks and there is no question that these developments markedly improved adhesion on corners and reduced wheel spin when accelerating from low speeds. Hence tyres by themselves were definite contributions to higher averages on the same h.p.

Developments in brake linings were probably even more important and as practically all the road racing cars of this period used linings made by Ferodo Ltd., it is of value to have a contribution from a member of this company. Mr. W. E. Shilton writes :

> The years 1928 to 1932 certainly did represent a time interval in which Ferodo Ltd. pioneered a very definite development in automotive brake linings, which had its effect on the performance of racing car brakes. Up to 1929-30 the brake lining with the greatest resistance to the severe conditions obtaining in racing was Ferodo Bonded Asbestos in its die-pressed or maximum density form. This material had a satisfactory resistance to wear at drum temperatures of 190-210 degrees C., but at higher values exhibited an appreciable fade. Judged by modern standards its average coefficient of friction was somewhat low at around 0.33. However, in 1929-30, we had developed Ferodo M.R., a non-metallic asbestos-base friction lining, with a practically infusible impregnant, to the stage at which it could be placed on the market, and it immediately proved to have about half the rate of wear of any previous high duty friction lining, allied to an increase in coefficient under normal conditions to a value between 0.38 and 0.4. At the same time elimination of the brass wire, which was previously an almost universal feature of asbestos base friction fabrics, showed that this feature largely eliminated drum scoring on the then widely used steel brake drums.
>
> I would say that the introduction of the present-day comparatively high friction coefficient lining, in the shape of Ferodo M.R., had quite a definite influence on the average speed at which a given circuit could be completed. At the same time it must be admitted that much more attention was being focused on road holding, steering, and last, but not least, on the mechanical detail work in the current brake hook-ups, improving the efficiency of the latter, and allowing a very much greater proportion of the driver's pedal effort to be available at the brake lining surface.

In the above note Mr. Shilton does not refer directly to the employment of hydraulic brakes by Maserati, but there is little doubt that the use of this system and the consequent total abolition of the friction wasting compensating devices improved the overall efficiency very considerably. Hydraulic brakes had, of course, been used in 1921 by Duesenberg in the Le Mans and in 1922 by Bugatti in the Strasbourg Grand Prix. There seems no explanation other than innate conservatism why fluid braking systems fell into disuse during the ten subsequent years. As we shall see, once they had been revived they were used in practically all subsequent designs.

When the proposition relating maximum to average speeds was laid down it was hedged with the condition that it was true for cars of similar size, weight, and standards of roadworthiness. Obviously the detail developments made in the five years after 1927 improved the standard of roadworthiness and in order to bring the factors back into line it has been proved that a correction of 6 per cent on average index is required to complement the 5 per cent addition which was brought into account for the benefits of front brakes. This combined bonus of 11 per cent means that a P3 Alfa Romeo with the same standards of braking and roadworthiness as the 1906 Renault would have needed a 600 b.h.p. engine, giving a maximum speed of 210 m.p.h., in order to reach the same lap speeds as were obtained in 1932 with a maximum speed of 140 m.p.h. and an engine developing less than 200 b.h.p.

This is an achievement for which the automobile engineers who contributed to it may be justly proud. The racing cars designed in 1933 represent the finest flowers of the orthodox design restricting itself to rigid axles, leaf springs with conventional engine position and transmission systems. How their blossoms wilted, and within two years were shrivelled, under the hot sun of heterodoxy and teutonic technical development, will be the subject of the next chapter.

CHAPTER SEVENTEEN

Rapid Advance

DURING the six years extending from 1928 to 1933 racing cars had in effect been built under *formule libre,* but, nevertheless, all the road racing wins and, except 1929 Cremona, record laps were secured by cars using engines of less than 3-litres capacity developing under 200 b.h.p.

As we have seen in the previous chapter attempts were made to use larger engines giving greater power but these experiments failed as the greater weight and poorer handling qualities of such cars more than offset gains in paper performance.

It cannot be doubted that when the Alfa Romeo and Maserati cars for the 1934 season were being considered these lessons were borne in mind, and it is interesting that neither of these companies had to make any marked change in design in order to bring their cars within the weight limit of 750 kg. Both had to increase the cross-section of the body in order to comply with a minimum width of 34½ ins. and Maserati simultaneously increased the width between the side rails of the frame. Alfa Romeo, also, slightly enlarged the wheelbase and track of their existing P3 straight-eight car and made a more important change by raising the cylinder diameter by 3 mm., thus bringing the capacity up to 2.95 litres. For 1934 the car was called the P3 Type B.

Both the Italian engines probably developed between 200 and 215 b.h.p. at the beginning of the 1934 season and both represented tried and trusted types which could be relied upon to combine high average speeds with complete reliability.

In France, Ettore Bugatti had spent the whole of 1933 struggling to make his new design of racing car *au point,* but he did not succeed in bringing it on-to the starting line until the Spanish Grand Prix at the end of September and, with 2.8-litre engine capacity, it was clearly outclassed by both its immediate rivals. This car, the Type 59, was in no way a direct projection of previous Bugatti practice. The quarter-elliptic rear springs and the semi-elliptic front springs passing through the tubular axle were, it is true, retained, but the straight-eight engine had plain bearings throughout with the timing gears at the rear. The supercharger was, as before, placed on the side of the crankcase but it now aspirated through twin downdraught carburetters, in place of the earlier single updraught instrument, the fuel/air mixture being discharged downwards from the blower and then passing through a right angle through a vertical riser pipe which joined a simple eight-branch manifold.

The whole power unit was set low in the frame so that the centre line of the transmission was substantially below that of the half shafts there being a double reduction gear included in the rear axle housing. The separately mounted four-speed gearbox with short open propeller shaft and right-hand driving position were in accordance with Bugatti tradition, but after some ten years of successful use Bugatti abandoned the cast aluminium wheels in favour of a very unusual arrangement of wire wheel in which the rim had internal serrations engaging with teeth cut on the periphery of the brake drum. This resulted in an extremely light assembly and changing the wheel continued to expose the brake shoes. These were expanded by levers operated by the brake cables of the exposed type running over pulleys which had characterised previous designs.

After another unsuccessful appearance at Monaco in April, 1934, Bugatti bored out the cylinder block from 68 to 72 mm., thus bringing the capacity up to 3.3 litres or rather over 10 per cent more than the rival Italian models.

From the technical viewpoint all three constructors who had been racing continuously for the past five years were using entirely othodox designs and indeed the bulk of the parts in the Italian cars were interchangeable with models built in the previous year.

As had been briefly mentioned in Chapter 2 the German cars constructed by Auto Union and Mercedes-Benz represented a complete departure from anything which had hitherto appeared on the starting line of an international race, but in detail design the Mercedes-Benz engine remained a traditional Stuttgart production. That is to say, it had welded steel cylinders, four valves per cylinder inclined at 60 degrees, roller-bearing crankshaft and big ends, and a supercharger supplying pressure air to the carburetters.

As explained in Example No. 14, Volume I, the blower was continuously coupled to the engine, the degree of boost being controlled by an inter-connected intake throttle and pressure release valve.

In detail the engine showed some variations from normal straight-eight practice, particularly in the use of five main bearings per crankshaft, and in the crank angle and firing order, but the most startling feature was its size and power output. Within an all-up weight of 450 lb. the designers contrived a bore and stroke of 78 x 88 mm., a capacity of 3.66 litres rising, within the first racing season, to 82 x 88 mm. (3.71 litres) and 82 x 94.5 mm. (3.99 litres). The smallest variant gave 354 b.h.p. on alcohol fuel. The first stage of enlargement raised the power to 398 b.h.p. and before 1934 was out the biggest version of the three was giving 430 b.h.p.

Never before in the history of motor racing had there been so large a step forward in maximum power available for the road wheels, and the gain of 125 h.p. as between the 1933 205 b.h.p. Maserati and 1934 Mercedes-Benz was greater by 10 h.p. than the entire gain in racing engine power output between 1906 and 1933.

Barely stated in this fashion one might be led to believe that the 1934 Mercedes-Benz power units had some miraculous combination of boost and r.p.m., but a study of their design shows that they were basically similar to earlier types of engine and may in fact be logically considered a direct development from the designs of the mid-twenties which also used steel cylinders and full roller-bearing crankshaft assemblies. Having previously used the 1926 eight-cylinder 1½-litre Talbot as a yard-stick to measure the efficiency of the P3 Alfa Romeo we can profitably make a similar comparison between the former engine and the Mercedes-Benz as it was run in the mid-season of 1934. If we do this we have the following :-

	1926 Talbot	*1934 Mercedes-Benz*
R.P.M.	6500	5800
Piston Speed ft./min.	3230	3600
H.P. sq. in. Piston area	4.68	5.9
B.M.E.P. lb. sq. in.	194	236
Manifold Pressure Ata...	1.95	1.66
H.P./Litre	96.6	105.5

The Mercedes-Benz figures for r.p.m., piston speed, manifold pressure h.p. per litre, cannot be reckoned as outstanding but the results under the heads b.m.e.p. and h.p. per sq. in. are remarkable, particularly bearing in mind the moderate boost pressure employed.

As has been pointed out in previous chapters the four valves per cylinder head has an inherent advantage in respect of valve area but on most previous designs this has been offset by impaired flow values. Mercedes-Benz engines were, however, remarkable for making the best of both worlds in this respect and it must not be forgotten that they enjoyed far more overlap than previous types. The resultant value of 17.7 h.p. per sq. in. of inlet valve area was 27 per cent better than the contemporary Alfa Romeo using nearly the same boost pressure.

Having given due credit to such detail refinements in a comparatively normal type of engine we must recognise that the primary technical interest of the car resides in the use of independent suspension to all four wheels.

In the early days of racing, Bollée and Sizaire-Naudin had used independent suspension on the front wheels of their voiturette cars but the nearest approach to independent suspension for the rear wheels had been in the chain driven models built in the first ten years of racing. In these the rear axle beam was relieved from transverse torque, and the consequent liability of one wheel to lift and spin. The use of a separate drive to each independently sprung rear wheel was, however, entirely a post-war development, pioneered by Prof. Rumpler and developed for racing only by Benz who used the swing axle arrangement on their 1923 six-cylinder, rear-engined cars which ran in the Italian Grand Prix and afterwards competed with some success in sports car form in various German national races and hill climbs.

When Mercedes and Benz amalgamated in 1926 this model was discontinued but Ledwinka continued the development of the swing axle with Tatra in Czechoslovakia. He additionally used independent front wheel springing and Tatra having proved the advantages thereof for low powered cars over very rough roads Mercedes-Benz followed with two small cars of 1½-litre capacity, one of them with rear engine mounting. Thus the decision to use all independent wheel suspension for the 1934 racing cars was a case where production car design influenced that of the competition model and not vice versa. But the actual application of principle to the Type W.25 was based on arguments strictly relevant to high speed performance. For example, no great effort was made to provide large wheel movements as clearly shown by the use of short transverse quarter-elliptic springs at the back of the car.

As mentioned in Example No. 14, Volume I, the overall length of the spring was only 14 in., and the maximum wheel travel was barely 2 in. The swinging half axles containing the driving shafts were held in trunnion bearings and thus although vertical movement produced a corresponding angular change there was no variation from the parallel if the car was viewed in a vertical plane. The springing of the front wheels also provided little increase in vertical movement compared with the orthodoxly sprung types the full bump position being barely 2 in. above the normal loading position. The benefits derived from I.F.S. were, however, not wholly bound up in the matter of increased wheel movement. Perhaps more important was the fact that the elimination of axles meant that the disturbance of any given wheel was not transmitted to its fellow whilst the elimination of torque effect at the back of the car was beyond doubt a very powerful factor in countering wheel spin and in giving abnormal acceleration away from low speed corners. All of these arguments in favour of independent suspension applied in equal measure to the Porsche-designed Auto Union cars which, in common with Mercedes-Benz, had parallel moving front wheels and swing axles at the back. The mechanical arrangement at the front differed, however, each wheel being supported on two trailing arms and torsion bar springs giving it a deflection of 1 in. per 350 lb. At the rear a single transverse spring was mounted some 30 in. above road level and torque reaction was absorbed by radius arms running forward to ball joints fixed to the tubular frame members.

These arms were placed at an angle of 57 degrees and the axis of wheel oscillation lay between the centre line of aspherical bearings on each side of the bevel box and the centre point of the ball and socket joints on the frame. With this arrangement there were variations of both track and toe-in as the wheels rose and fell.

Both the Mercedes-Benz and Auto Union cars had a roll centre at ground level at the front and considerably above hub level at the rear so that in both cases the anti-roll couple at the back was considerably higher than it was at the front.

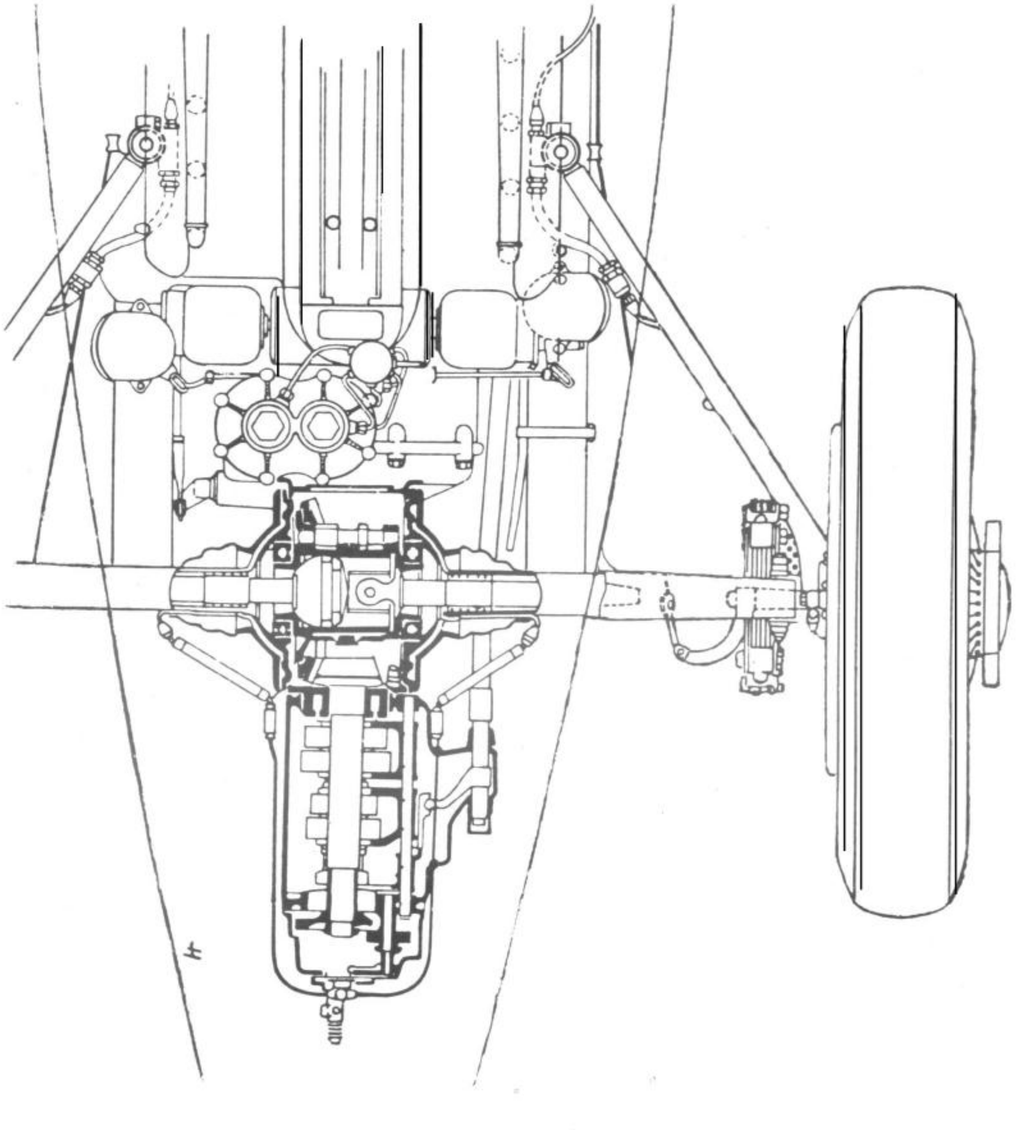

Rear axle and gearbox layout of the Auto Union.

We have remarked previously on the boldness of the Mercedes-Benz engineers in raising engine output by 100 b.h.p. over 1933 figures and committing themselves to a chassis with all independent suspension. The Auto Union amalgam was even more audacious in that it also embraced a V. 16 engine of quite exceptional piston area mounted between the driver and the rear wheels.

The possibility of using rear engine mounting had been considered by Mercedes-Benz and both Nibel and Wagner (who were largely responsible for the chassis design of the Stuttgart products) were ex-Benz men who had had personal experience of the 1923 racing cars. This notwithstanding they concluded that the conventional engine position was the better. In making the opposite decision Porsche was undoubtedly influenced by his business partner, Adolf Rosenberger, who had been a successful competitor with the rear-engined Benz sports cars in 1925. General interest in the rear-engined cars had also been revived in 1930 by an article by Joseph Ganz in Motor *Kritik* which dealt specifically with the Benz racing cars built six years previously.

Porsche considered that two contemporary considerations of 1934 racing added special merit to rear engine location. The prospect of growing engine power and size involved provision for more and more fuel unless average speeds were to be marred by unnecessary pit stops (i.e. stops, dictated solely by the need to refuel over and above those required for fitting new wheels and tyres) and a big tank at the back of the car could impair road holding.

The maximum weight enforced by the 1934 regulations was another incentive since the elimination of the propeller shaft and the combination of engine, gearbox and bevel box in one aggregate was undoubtedly a weight saving factor. These were no mere theoretical considerations. The change in weight as between the front and rear wheels with a conventional tank arrangement as compared with the central tank adopted by Auto Union has already been mentioned and, further, so far as all-up weight is concerned, the Mercedes-Benz cars as first built had the utmost difficulty in complying with the regulations, but Auto Unions had many lb. to spare. This was remarkable in that although the power of the two cars was almost the same the cubic capacity of the Auto Union engine was no less than 4.36 litres, whilst the piston area of 90 sq. in. was 50 per cent more than the Mercedes and approximately twice as much as the corresponding Alfa Romeo. Another useful advantage (accruing from the abolition of propeller shaft) was a reduction in overall height and frontal area although in comparing the latter figure with, say, the Alfa Romeo it must be borne in mind that both the German cars resorted to a good deal more cowling on the grounds that the larger projected area was balanced by lower drag co-efficient. It is interesting to make a table of broad specifications of the principal rivals in the early part of the 1934 season. These were :–

	Alfa Romeo	*Auto Union*	*Mercedes-Benz*
No. of Cylinders	8	16	8
Cylinder arrangement	In line	V 45°	In line
Cubic Capacity, cm.^{3}	2900	4360	3360
Maximum b.h.p.	210	295	354
Frontal area	10.8	10.8	11.8
H.P. per sq. ft.	19.5	27.3	30
Laden weight	18.7	21.5	20
B.H.P. per laden ton	225	263	354
Maximum speed, m.p.h. . .	145	170	165

As shown in the table on page 82, Volume I, Maserati ceased to be an effective force in formula racing in 1934 and in 1935 Bugatti also faded out and failed to secure a place in any of the major European races, so from a technical viewpoint interest was concentrated on Alfa Romeo, Auto Union and Mercedes-Benz. In all three cases the most noticeable change compared with the previous year was the introduction of more power. Alfa Romeo increased the cylinder diameter of the P3 engine to 72 mm. bringing the capacity up to 3.2 litres ; Auto Union bored out their sixteen-cylinder engine to 72.5 mm. diameter bringing the capacity up to 4.95 litres. They also raised the manifold pressure from 1.6 Ata to 1.75 Ata and the compression ratio from 7 : 1 to 8.95 : 1. By these changes they combined a bigger engine with both higher b.m.e.p. and maximum r.p.m. so that they developed 375 b.h.p. at 4800 r.p.m. Mercedes-Benz for most of the year used an engine of 3.99 litres capacity giving 430 h.p. at 5800 r.p.m. The general performance factors were therefore :

	Alfa Romeo	*Auto Union*	*Mercedes-Benz*
No. of Cylinders	8	16	8
Cylinder arrangement ..	In line	V.45	In line
Cubic Capacity cm.^{3} ..	3200	4950	3990
Maximum B.H.P.	262	375	430
Frontal area	10.8	10.8	11.8
H.P. per sq. ft.	24.2	34.6	36.5
Laden weight	19	21.5	20
B.H.P. per laden ton ..	275	350	430
Maximum speed	155	175	180

The maximum speeds cited above are, as in the 1934 table, theoretically derived from the b.h.p. per sq. ft. figures. Fortunately, however, in this year we have a direct check between calculation and reality at Pescara where Alfa Romeo reached 157 m.p.h. and Auto Union 172 m.p.h.

In view of the overwhelming success of Mercedes-Benz in the races of 1935 it is only reasonable to suppose that it was the fastest of the three cars, although it did not run at Pescara and was not timed in any other race.

In addition to increasing engine size and output both Alfa Romeo and Auto Union made a number of chassis changes. The former adopted independent front wheel springing using the Dubonnet scheme and also hydraulically operated front brakes. A number of cars were built and run with reverse quarter-elliptic springs on the Bugatti principle attached to the normal P3 Type twin propeller shaft rear axle. Auto Unions made considerable changes on their car, the tail was shortened, the exhaust manifolds modified, and perhaps most important of all the transverse leaf spring removed and in its place torsion bars fitted inside the tubular frame members connected to the swinging half shafts by short arms and links. The geometry of the system remained unchanged but the spring rate was decreased to 230 lb. per in. so that the rear suspension was now substantially softer than the front.

Apart from minor changes based on the racing experience of the previous year, the Type W.25 Mercedes-Benz chassis and body-work remained unaltered.

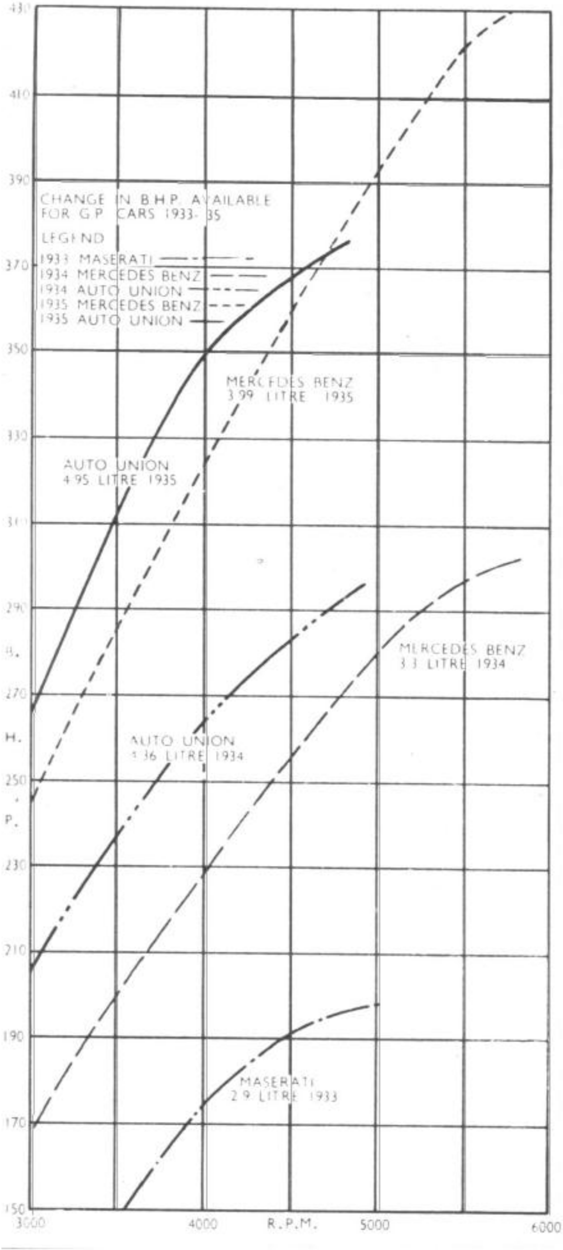

But although during 1935 the difference in between the ultimate development of the classic car, as exemplified by the Alfa Romeo, and the heterodox types was a mere ½ per cent, the future was to show that the last ounce of performance had been wrung out of the former whereas the latter were to prove capable of even further developments in the realms of power and speed.

CHAPTER EIGHTEEN

Peak Performance

THE German road racing cars of 1936 and 1937 had more power per sq. ft. and per ton, and correspondingly a higher maximum speed and greater acceleration than anything hitherto known. It is, in fact, no exaggeration to say that the sheer statistical performance of the C Type Auto Union and the W125 Mercedes-Benz is unlikely again to be equalled by cars using piston-type power units. As a corollary, the gap between these cars and Alfa Romeo became even more pronounced than in 1935, and all other makes definitely dropped out of the running.

These facts should not result in any understatement of the merits of the Alfa Romeo cars which represented a very material improvement on previous models of the marque.

As has been mentioned in the previous chapter the Alfa Romeo which won the 1935 German Grand Prix run in July followed the innovation of the previous year by using independent suspension for the front wheels. This was an adaptation of an existing chassis design, but in September, 1935, the Milan factory produced an entirely new machine, which in addition to having a 3.8-litre, straight-eight, engine, had independent suspension to all four wheels, the arrangement at the rear consisting of a swing axle with a transverse leaf spring. Using this car Nuvolari made the fastest lap of the day at 90 m.p.h. at Monza, and although the model was less successful in the succeeding Spanish Grand Prix, both the designer, Jano, and the drivers were well pleased with the stability and road holding. One may suppose that this engine developed at least 330 b.h.p., whereas the P3 in its most highly developed form gave no more than 265 b.h.p., and thus the prospects for 1936 seemed bright.

As with the P3, so with the new car, outstanding performance was realised in relation to the comparatively low power, and this all-independent Alfa Romeo gained many successes during the 1936 season, winning five events, one of them in the U.S.A. In the latter part of the year the car was run with a twelve-cylinder engine of four litres capacity developing some 360 b.h.p., and in this form gained second position in the Italian Grand Prix.

It will be seen that the Italians recovered considerably from their series of defeats in the latter half of 1934 and (with one major exception) the whole season of 1935.

For Mercedes-Benz 1936 was a lean year indeed, and this is all the more surprising since the Stuttgart engineers enlarged the capacity of the straight-eight engine (Type M25E) to 4.74 litres and extracted 494 b.h.p. at 5,800 r.p.m. from it. In addition, a very considerable change was made to the body and chassis design. The former was far more curved than previously, with fairings built over the suspension units. The front springing arrangements remained as before, but modifications were introduced at the back to cope with the greatly increased engine power. And, most important of all, the wheelbase was reduced by 11 in. in order to meet the demands of the drivers for a more easily-handled car on short and twisty circuits.

This short-wheelbase model had been used for practice in all the later events of 1935, and it started the 1936 season promisingly enough with two wins-Tunis and Monaco. However, during the rest of the season it only once secured better than a fourth place, a sad change from the victories of the previous year. Mechanical troubles played their part in this unhappy result, but the car proved its speed not only in winning the races just mentioned, but also by making fastest lap at Berne in practice for the Swiss Grand Prix and leading in this event for the first eight laps. At Tripoli, however, this car proved no faster than the 1935 model, whereas, on this exceedingly fast circuit, the 1936 C Type Auto Union proved itself to be 3½ m.p.h. quicker than the previous B Type model.

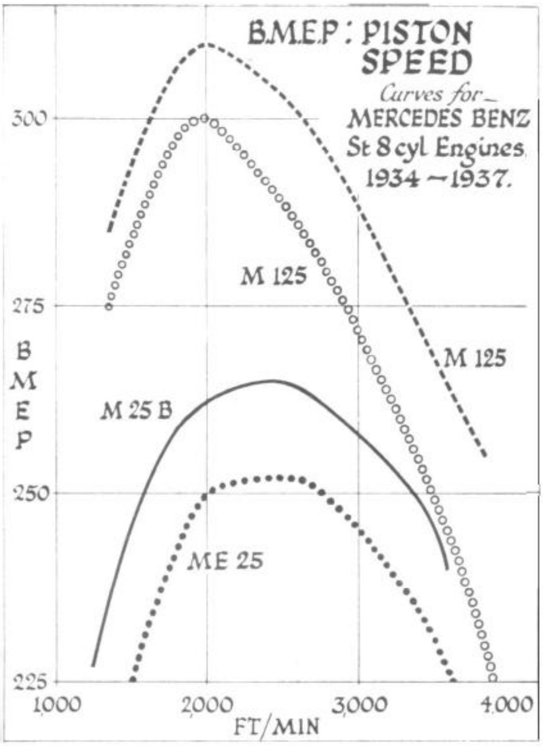

Curves showing the fall in b.m.e.p. as the five-bearing Mercedes-Benz engine had enlarged swept volume with fixed valve size ; and the improvement effected on the 1937 seven-bearing engine especially with special carburetter.

Auto Union, in contrast to Mercedes-Benz, lengthened their wheelbase in 1936 by 4½ in. and simultaneously increased the track by 1 in. The extra length was given up to a 46-gallon fuel tank, for although the engine capacity was raised by over 20 per cent to 6 litres this was achieved within the framework of existing castings and cylinder centres.

The bore was increased only from 72.5 mm. to 75 mm., the stroke being lengthened from 75 mm. to 85 mm. as compared with the 1935 B Type car. Simultaneously the compression ratio was raised from 8.95:1 to 9.2:1, and the boost pressure from 1.74 Ata to 1.87 Ata. These changes took the peak r.p.m. up to 5,000, so that with a b.m.e.p. of 330 lb. per sq. in., 520 h.p. was attained. Despite this great gain in power both weight and frontal area remained unchanged and, compared with the P3 Alfa Romeo constructed only four years previously, b.h.p. per ton was doubled and power per sq. ft. nearly trebled.

In these circumstances the maximum speed in a race was determined more by choice of gear ratio than by available power, but with the highest gear the car could reach a theoretical 210 m.p.h.

With the same gearing the curves of tractive resistance against torque available in the various gears show that full power would give wheel spin on first and second gears up to 100 m.p.h., and that on wet roads the wheels would spin at any speed below 175 m.p.h. if the engine were given full throttle. With the lower rear axle ratios used for road racing, maximum speed at peak r.p.m. would be reduced to some 180 m.p.h., but the torque curves would lie some 20 per cent higher than those shown on the graph. In other words, the curve of tractive effort on fifth speed would lie approximately on the line occupied by third speed in the graph and third would correspond with the graph for second speed. It will be seen that in this case full throttle would give wheel spin between 50 and 125 m.p.h. even on a dry road (*vide* page 143).

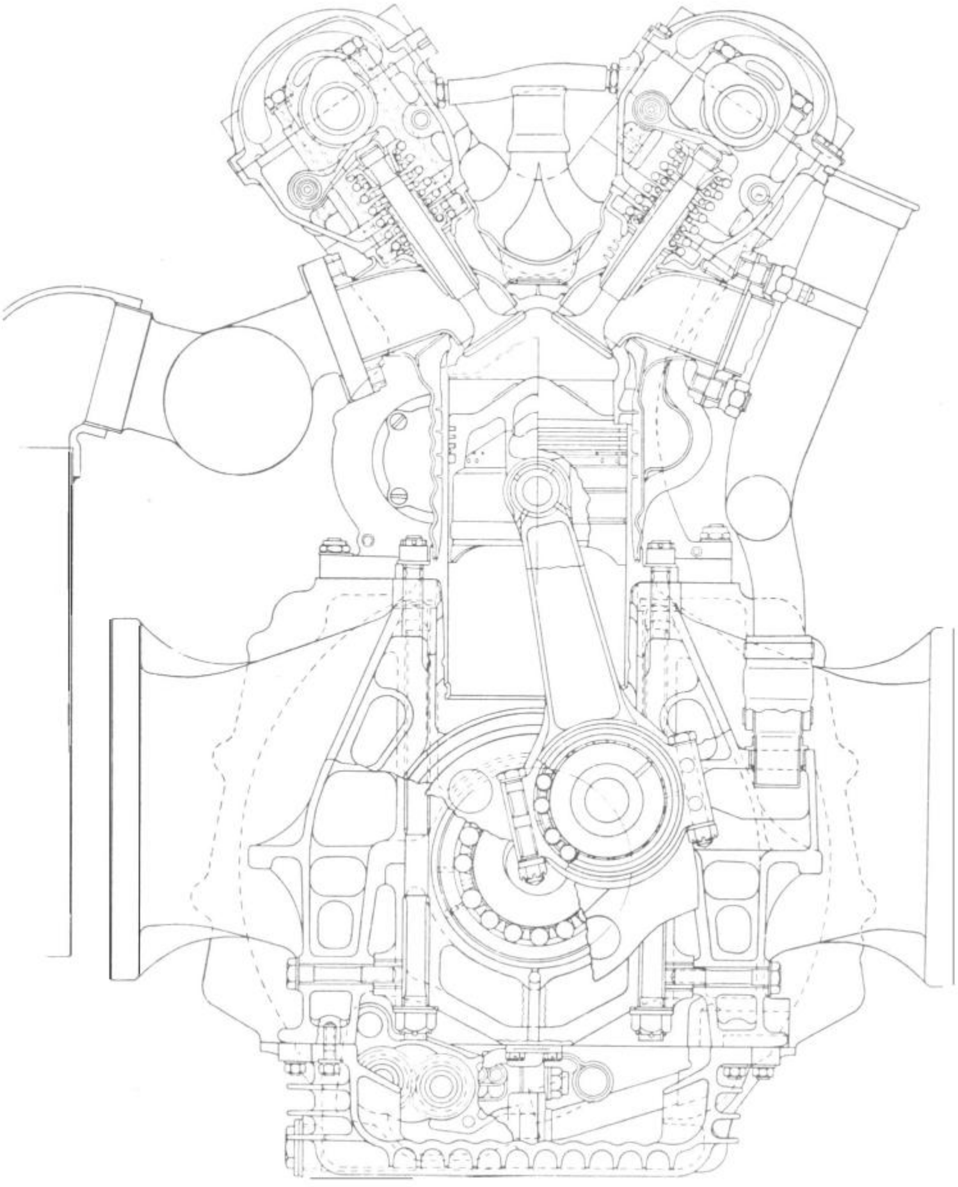

The 5.66-litre 8-cylinder Mercedes-Benz engine of 1937 (Scale 1 : 4).

Performance of this kind obviously taxed the driver's judgment to the utmost, and the great power also exaggerated the inherent over-steer characteristics of the suspension system. These facts, coupled with the forward seating, made it necessary to choose a driver with abnormally quick reactions and to provide him with very direct acting steering. Brakes also became a critical problem and tests showed that they were in use for up to 35 per cent of the total distance of any race.

From the inception of the 750 kg. formula both Auto Union and Mercedes-Benz had used Lockheed brakes with drums approximately 16½ in. diameter and 2 in. wide which were as large as reasonably possible, even with the very big wheels which were being used. Braking, however, was improved on the 1936 Auto Union C Types by having two leading shoes and by using ventilating scoops to keep the temperature down to a minimum. Light alloy drums with inserted liners were, of course, employed and there were also two master cylinders connected by a balancing lever which permitted a quick variation of brake distribution as between front and rear wheels. This scheme guaranteed that one set of brakes would always work in the event of pipe failure, but such a breakdown was, in fact, never experienced.

Despite the enormous power available road consumption remained reasonably good at between 3½ and 4½ m.p.g., this being a reflex of the very creditable specific fuel consumption obtained with the V16 engine which averaged between 0.77 and 0.88 lb. per b.h.p. hour. As the 2- to 3-litre cars used prior to the 1934 formula had given 6 to 8 m.p.g. with not more than 200 b.h.p., 4 m.p.g. with over 500 b.h.p. can be considered a most excellent performance.

The figures above mentioned enable one to calculate the approximate average power used throughout the circuit. At an average of 90 m.p.h. fuel was being used at the rate of some 25 gallons per hour, and if one takes the consumption at 1 pt. per b.h.p. hour there is an average engine output of 200 b.h.p. This at the full laden weight was the equivalent of 180 b.h.p. per ton.

Tyre consumption proved to be an even more difficult problem than fuel consumption. Prof. Dr. Ing. Eberan von Eberhorst has produced some most interesting figures showing the tyre life to be expected on the Nürburg Ring in relation to average lap speed and this, tabulated, is as follows :

Average Speed	Tyre Mileage
72½ m.p.h.	620
75	360
77½ ,,	220
80 ,,	175
82½ ,,	120
85 ,,	100

Even these comparatively brief mileages postulated the use on the rear wheels of exceptionally large tyres of 7 in. section mounted on 19 in. rims. Even larger wheels with 22 in. rims were used for exceptional events such as Tripoli and A.V.U.S. These were designed by Continental to run at comparatively high pressures, that is to say up to 60 lb. on tracks and 50 lb. on road circuits, maximum tyre temperature was kept down to 85º C. Four tyres weighed 158 lb., equal to nearly 9 per cent of the unladen weight.

The rear tyres were larger than the front and one may assume that each rear wheel and tyre weighed nearly 60 lb., so that the unsprung rotating masses represented by the tyre, wheel and brake drum scaled at least 80 lb. With masses of this order the acceleration with one back wheel striking a bump at 180 m.p.h. could provoke a gyroscopic reaction of the order of 1,000 lb. ft., and as the Auto Union geometry imposed a change of toe-in as well as " pendel " motion around the swing axle points it can readily be seen that at high speeds, even on the straight, the cars could be unstable.

During 1936 Mercedes-Benz decided to embark upon an entirely new design of racing car. Produced by the same team of engineers (that is to say Director Max Sailer as head of the experimental department with Oberingenieur Wagner and Hess looking after chassis and engine respectively), who had been in charge since the death of Nibel, it represented as complete a break with the previous W25 series as the former had with the previous " classic " design of car.

It has been truly said that " the courage of the pioneer lies not so much in doing something new as in saying farewell to something old. The design of the WI25 was a complete "farewell " in that no major part of the previous cars was carried forward. The car is fully described as Example No. 16, Volume I, and from a technical viewpoint it was remarkable for it led the way to really soft suspension, it was the first road racing car to employ the de Dion type of rear axle and, finally, it was the first, and only, road racing car having a power unit which developed over 600 b.h.p.

In the first three seasons of the 750 kg. formula racing, independent suspension to all four wheels had been used in conjunction with comparatively stiff springs, giving, on the front wheels of the W25, a vertical rise of only 2 in.

On the 1937 W125 design the front wheels were permitted to rise 3 in. from normal to full-bump position, and the rear wheels nearly 4½ in., and in order to provide this increased motion at the front end of the car the effective length for the wishbones was increased from 5 in. to 10 in., and the short, stiff, enclosed coil springs replaced by large diameter open coil springs. In addition, the friction-type shock absorbers were replaced by hydraulic dampers which was in harmony with the theme of reducing the stiffness of the suspension. At the same time the work imposed on the dampers was, of course, immensely increased by virtue of the greater wheel motion and only a marked step forward in the design of piston-type fluid dampers made this change possible.

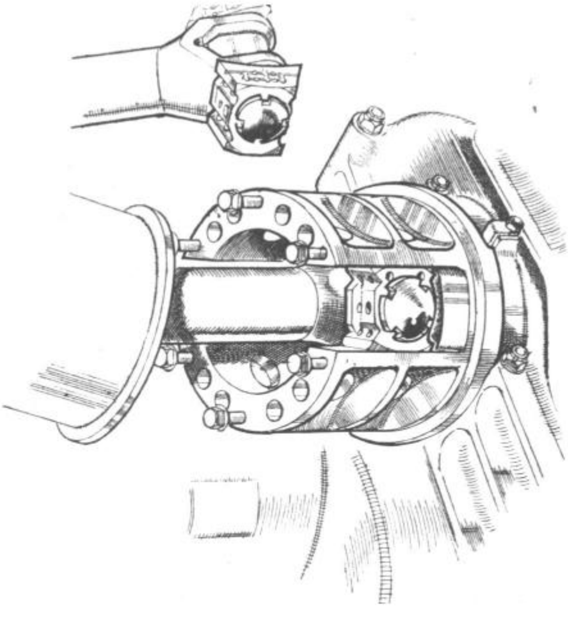

The 1937 Mercedes-Benz Type WI25 had a de Dion type rear axle with exposed half-shafts, each with two universals. Splines were avoided by the use of de Dion pot-type joints shown in this drawing. The design was unchanged for 1938 and 1939.

In the designing of the rear suspension of the W125, Wagner followed the move made by Porsche in 1935 in substituting torsion bars for a transverse leaf spring, thereby decreasing both the stiffness of the suspension and the weight of the spring itself. More important, he threw away independent suspension with swing axle at the rear and substituted a de Dion layout and by this stroke entirely changed the handling characteristics of the racing car. For the first time absence of torque reaction tending to lift the right-hand driving wheel was coupled with freedom from gyroscopic reaction caused by the rear wheels swinging about a short radius, and although the unsprung weight was greater than with the swing axle it was far less than with the " classic " axle beam used up to 1934.

The Count de Dion commenced his career as an automobile manufacturer by producing steam cars to the designs of two engineers called Trepardoux and Bouton, and by the end of the nineteenth century the firm was known as de Dion-Bouton and concentrated entirely upon the production of petrol-driven cars and proprietary engines. Considerably earlier than this, however, de Dion had been interested in steam-propelled vehicles and actually drove one in the first motoring competition of which we have definite knowledge, which was run in 1887. In 1894 a de Dion steamer put up the fastest average speed (11.6 m.p.h.) in the Paris-Rouen run, and there is photographic evidence that in 1893 the idea of the de Dion axle had taken shape.

Since the layout was particularly suitable for use with a steam engine it has been suggested by Kent Karslake, that the idea may well have come from the drawing-board of Trepardoux. This is speculation, but it is a matter of record that the merits of this system for driving and suspending the rear wheels of racing cars was ignored until 1931 when it was revived by Harry Miller who used it on the three eight-cylinder 3.75-litre cars which he built for the Indianapolis race. One of these driven by Hepburn finished third but truth compels one to record that the use of this scheme was probably dictated more by convenience than by enlightened engineering.

In 1924, Miller had built some front-drive cars which had used in effect the de Dion axle for the front wheels. These were supported on a tubular axle beam and were driven through exposed half-shafts which had two universal joints on each side. Not all the racing drivers who were supplied with these cars were, however, satisfied with the front-drive principle and to meet their wishes a rear-drive chassis was built in which the front-end parts were used *en masse* at the back end of the car. It is interesting to note that although the Auto Union group adopted the de Dion layout for Horch touring cars of 1935 the scheme was not used in road racing vehicles until adopted by Mercedes-Benz in 1937.

Mercedes-Benz coupled these radical changes in suspension with a frame of remarkable stiffness fabricated from welded steel tubes of oval section. By using material less than 2 mm. thick, weight was reduced to a minimum, and although the wheelbase of the W125 was increased by 3 in. compared to the 1934-5 models (1 ft. 1 in. compared with the 1936 car), the dimensions of the brake drums increased, and the rear axle assembly improved, the chassis weight rose by only 33 lb.

A larger engine, of entirely new design and remarkable performance, added a further 45 lb. to the dry weight.

Ob. Ing. Hess had been in charge of the design of all Mercedes and Mercedes-Benz racing engines since 1914, and he continued to direct the construction of the

M125 power unit along the basic lines which had proved so successful for more than thirty years. In detail, however, the Ml25 was a great improvement on the M25 series. It had nine main bearings in place of five, crankshaft diameter was increased by 13 mm., and it was counter-weighted, the cylinder diameter increased from 86 to 94 mm. (the stroke remaining the same), and the capacity raised to 5.66 litres.

In 1936 the 4.74-litre ME25 engine was giving 494 b.h.p. (slightly less than the 520 b.h.p. of the 6-litre Auto Union) but in an early trial, using petrol-benzol as fuel, the Ml25 gave 545 b.h.p. maximum and 515 b.h.p. at only 5,000 r.p.m. Later tests on alcohol fuel showed 568 h.p. at 5,800 r.p.m. These outputs were obtained after the traditional Mercedes-Benz supercharging arrangement, that is to say, the blower supplied pure air under pressure to the carburetters, had been abandoned.

The theoretical defects of this arrangement have been made plain in Chapter 12, and it is somewhat surprising for Mercedes-Benz to continue with this principle for three racing seasons. In July, 1937, however, they commenced racing with cars having suction-type carburetters, previous development on the test-beds having shown that large gains in power were derived in the change-over, particularly in the lower part of the speed range. This is shown clearly in the curves for b.m.e.p. versus piston speed, which is limited to the relative performances of the M25 and Ml25 series of engines.

Taking into account the use of a special carburetter which increased the fuel flow to 2 lb. per b.h.p. hour on full throttle the gain in b.m.e.p. at full power was from 240 lb. to 262 lb. at 3,500 f.p.m. (13 per cent). At 2,000 f.p.m. the difference was as between 262 lb. and 310 lb. (18 per cent), a figure which compares closely with the 20 per cent gain obtained by a similar change in carburation layout on the 1924 Sunbeam engine for which curves are reproduced in Chapter 22.

It will be seen that the b.m.e.p. curves for all the Mercedes-Benz engines show a pronounced peak at about 2,000 f.p.m., corresponding to a little over 3,000 r.p.m. The Type Ml25 engine was thus remarkable not only for the colossal figure of 646 h.p. realised on the flywheel, but also on account of the tremendous power output at moderate r.p.m. For example, it gave 248 b.h.p. at 2,000 r.p.m.-almost the same power as achieved with the 1935 Alfa Romeo at little more than one-third the Italian car's crankshaft speed. The power developed by the Auto Union's engine at 5,000 r.p.m. was surpassed on the Ml25 at 4,000 r.p.m. The peak power was nearly 25 per cent greater than the C Type Auto Union, but this was offset to the tune of 16 per cent by greater frontal area. There remained, however, an advantage of 7 per cent in b.h.p. per sq. ft. of frontal area, and on these grounds one would expect the Mercedes-Benz to have a slightly superior circuit speed. Once again road speed mirrored the drawing-board.

The W125 scored not only in respect of sheer performance, but also in the matter of stability and ease of driving. The overall characteristics of the suspension and weight distribution made this car an inherent understeerer, a highly desirable quality in a racing vehicle, particularly one with great h.p. per ton, for in so far as the driver can provoke wheel spin he can immediately convert an understeerer into an oversteerer if the conditions require it. The Auto Union drivers, on the other hand, had no such option and were compelled to drive sensitive, oversteering, cars in which excessive throttle opening could produce most embarrassing results. Only Rosemeyer really mastered this problem, and it is instructive to make a table showing the comparatively large differences in speed between Rosemeyer and his team mates in the Auto Union stable in contrast to the homogeneous grouping of the Mercedes-Benz drivers.

Taking two diverse courses such as Nürburg Ring and Pescara as examples, we find that in 1937 Rosemeyer made the fastest practice lap on each. With him as a standard of speed we then get :

		Nürburg Ring	Pescara
Auto Union Team	Rosemeyer	100	100
	Hasse	96	—
	Müller	95.8	—
	Stuck	92.2	95.8
	Fagioli	—	93.6
MerLedes-Benz Team	Lang	99	—
	Von Brauchitsch	99	96.6
	Caracciola	97	96.6

In sum, taking the average of these two circuits, Rosemeyer was 4 per cent faster than Müller and Stuck, but Brauchitsch was only 1 per cent quicker than Caracciola and the biggest spread between the three fastest men of the Mercedes-Benz team was only 2 per cent.

Both makes of car, however, stand on the very peak of performance and this technical virtuosity was backed up by a tremendous organising effort to ensure supplies of fuel, tyres, spares and maintenance. In both teams, for example, it was usual to take two sets of cars to an event comprising cars to be used in the actual race, plus spare cars for practice only. In addition, there would be other cars undergoing overhaul at the works in preparation for an event taking place perhaps only a week subsequently. As mentioned in Chapter 13, Mercedes-Benz, for example, had the first call on the services of 300 tool-room men, and although these were rarely called upon to work all at once they constituted a source of skilled man-power which enabled new designs to be turned into metal, tested and approved or rejected in a remarkably short space of time.

The general atmosphere of team racing in this period has been faithfully portrayed in *Motor Racing with Mercedes-Benz,* by George Monkhouse, and from a technical point of view it is only necessary to remark that the successful running of the Stuttgart cars in particular was entirely dependent upon a highly developed service organisation.

By contrast the Auto Unions were far more lightly stressed. They ran at 25 per cent less piston speed and 10 per cent lower b.m.e.p., and thus could be, and probably were, run with a greater economy of means. The Mercedes-Benz was indubitably the faster car of the two, but one is bound to record admiration for the simple and harmonious Auto Union design which was able to compete successfully in four seasons of racing with no major changes.

The end of 1937 saw the end of the 750 kg. formula and the Donington Grand Prix of that year was the last public appearance of the world's most powerful racing cars. Practice speeds confirmed the slight superiority of Mercedes-Benz, but it was perhaps a happy accident that during the race proper these two makes tied for the fastest lap of the day.

CHAPTER NINETEEN

Technical Victories

AS explained in Chapter 13, at the end of 1936 the 750 kg. maximum weight formula should have been replaced by new regulations in which minimum figures for weight were related to engine capacity.

As a racing car has certain fixed items of weight and windage it was fairly obvious that all serious manufacturers would use the largest engine size permitted and after a good deal of discussion, during which it was proposed that a 4½-litre unsupercharged engine should be as effective as a 3.46-litre supercharged type, the maximum capacity for the latter was cut down to 3 litres ; simultaneously the change was deferred until 1937.

In 1935-6, when the matter was being argued, supercharged engines were developing about 235 b.m.e.p. at a piston speed of 3,500 f.p.m., and there was an implied assumption that the designer of an unblown engine could extract 157 b.m.e.p. at the same piston speed. Prima facie this was a logical contention, but two highly important factors were overlooked. The first, that by raising the boost pressure, the designer of a supercharged engine had a ready means of increasing b.m.e.p., whereas 160 b.m.e.p. might be considered as the ultimate on an engine with atmospheric induction. The second, that to maintain parity of performance piston area would have to vary directly with cylinder capacity. Logically, therefore, if the 3-litre supercharged engines were straight-eights the unsupercharged 4½-litre engines would be V12's, and it is worth noting that these types were adopted by Alfa Romeo and Delahaye respectively. Both Mercedes-Benz and Auto Union, however, chose to use V12 3-litre supercharged engines and, hence, secured an advantage in piston area over any unsupercharged type having fewer than eighteen cylinders. Moreover, both the German companies raised manifold pressure, Auto Union from 1.85 Ata (1937 C Type) to 2.2 Ata (1938 D Type) and Mercedes-Benz, also, from 1.85 Ata (W125) to 2.2 Ata (W154), increases of 22½ per cent. So far as the power unit was concerned they, therefore, met an enforced diminution of capacity by raising boost pressure and increasing crank speed by about 2,000 r.p.m. in each case.

These figures, coupled with piston areas of 61.5 and 65.5 sq. in. created maximum horsepower far beyond anything that could be possibly achieved by a twelve-cylinder, 4½-litre unsupercharged engine, and both technically and in performance on racing circuits the two German designs continued to dominate the field.

In the winter of 1937-8 major changes of personnel in the Auto Union camp substantially affected the design of the forthcoming cars. Porsche no longer continued as consultant and the responsibility for design was taken over by Director Werner, assisted by Ing. Fueureisen and Prof. Dr. Ing. Eberan von Eberhorst. Then in February, 1938, an accident during a record-breaking attempt caused the death of Bernd Rosemeyer, a most serious loss for he was not only a driver of genius, but also a capable mechanic able to act as a liaison between the design department and the team of drivers.

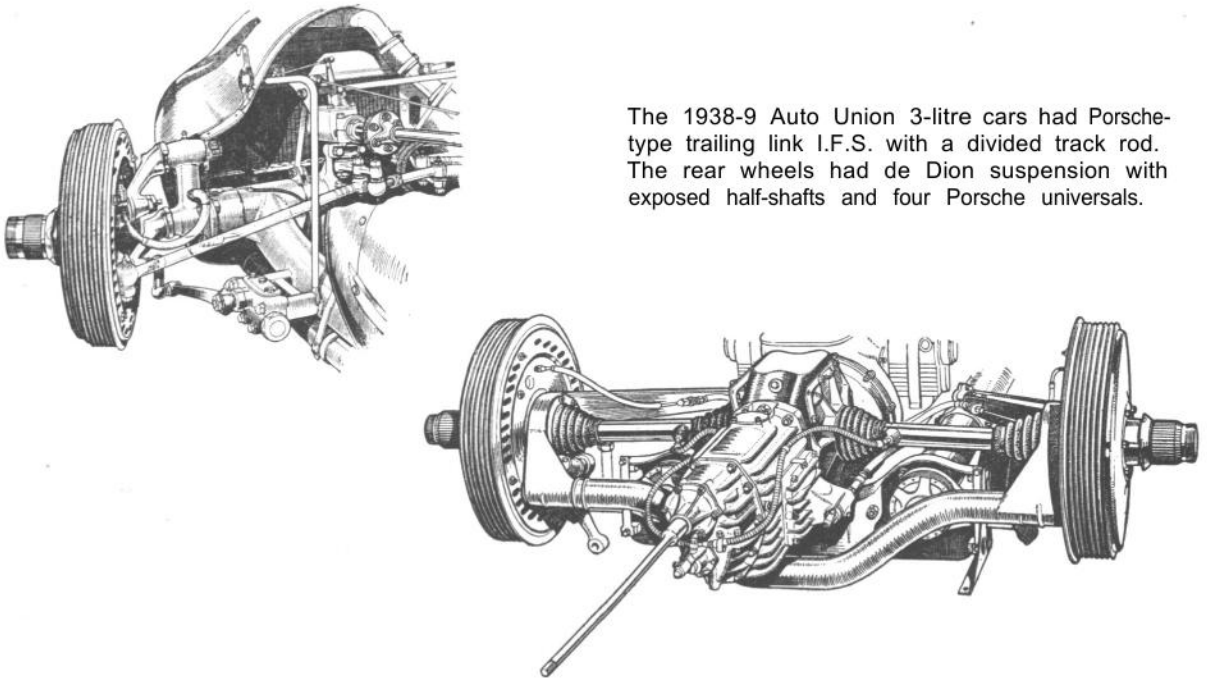

The 1938-9 Auto Union 3-litre cars had Porsche-type trailing link I.F.S. with a divided track rod. The rear wheels had de Dion suspension with exposed half-shafts and four Porsche universals.

It is no exaggeration to say that Rosemeyer's death pre-disposed the Auto Union group to retire from racing, but there were over-riding reasons that they should continue and they pressed on with work on the new cars in which, despite the departure of Porsche, the basic layout of the rear-engined C Type was retained. But with the exception of the gearbox and differential gear assembly all the components were changed in detail. The use of twelve in place of sixteen cylinders caused an increase in the included angle between the blocks from 45 to 60 degrees in order to keep even firing impulses, which in turn led to an entirely different valve gear for with the wider V it was no longer practicable to operate all the valves on a single central camshaft. In addition, the twelve-cylinder engine peaked at 7,000 r.p.m. and as the size and weight of the valves changed but little, inertia effects were double those on the C Type so that the previous layout was unsuitable for this reason alone. An ingenious compromise replaced it whereby the two inward facing inlet valves were operated as before by one central shaft (now carrying twelve cams) which in turn was driven from bevel gears and a vertical shaft at the back of the engine exactly as on the sixteen-cylinder Porsche design. This vertical shaft (also as before) carried spur wheels to drive the supercharger. At the top end, however, two short transverse shafts engaged with the bevel wheels carrying the drive to a camshaft mounted on the outside of each block which operated the exhaust valves. The similarity of the engines was continued further in the general layout which utilised detachable light-alloy heads and a deep crankcase with inserted wet liners, one-piece connecting rods and roller bearings for the big ends, and a Hirth crankshaft with lead-bronze main bearings having the same diameter as on the sixteen-cylinder power unit.

The crankshaft was, however, more fully counterbalanced so as to relieve the main bearings at the higher peak r.p.m., which in turn resulted in an output of about 420 b.h.p. as originally designed with single-stage boost.

As compared with the C Type engine both capacity and piston area were approximately halved, but piston speed was raised by 20 per cent and peak r.p.m. by

40 per cent. These were creditable achievements, but nevertheless the early 1938 D Type engines were deficient in power as compared with corresponding Mercedes-Benz M154 power units, and this made it imperative to increase the air flow per minute through the engine either by increasing r.p.m. or raising the manifold pressure.

The Auto Union engineering department always took a conservative view of crankshaft revolutions and presented with this choice they chose an increase in the boost pressure from 2.2 Ata to 2.6 Ata. At the lower figure the Roots blower was already giving a poor adiabatic efficiency and the higher pressure was thus conditional upon the use of two-stage blowing. This expedient was adopted in 1939 with the result that the engine delivered over 500 b.h.p.

The relative sizes and speeds of the blower units were as follows :

	D Type single stage Roots	Two-stage Roots blower	
		1st stage	2nd stage
Rotor length	170 mm.	190 mm.	145 mm.
Rotor diameter	96 mm.	116 mm.	96 mm.
Rotor distance	60 mm.	69 mm.	60 mm.
Delivery per blower revolution	1.385 litres	2.255 litres	1.180 litres
Ratio blower to engine speed	2.4	1.63	1.63
Boost	17 lb. (2.2 Ata)	12 lb. (1.8 Ata)	24 lb. (2.6 Ata)

For this two-stage engine a special carburetter was developed by Auto Union Racing Department and built by D.U.M. This had no float chamber, but four horizontal ducts with two jets in each. Each jet was fed with petrol by a pump and connected to a small over-flow chamber with surplus fuel scavenged by a second pump and fed back into the tank. This carburetter proved much more successful than float types, but an unexpected consequence of halving engine capacity was a very large increase in specific consumption, and as a consequence an actual reduction in mileage per gallon. The former rose from a maximum of 0.88 per b.h.p. hour on the C Type to 1.3 lb./b.h.p./hour on the D model, and road consumption dropped from between 3½ and 4.7 m.p.g. down to only 2½ to 3½ m.p.g.

In order that the car could travel 150 miles on the track with a reasonable margin of safety a minimum tank capacity of sixty gallons was thus needed and the 3-litre cars carried sixty-two gallons compared to forty-six gallons on the C Type.

This greater volume was accommodated in side tanks with a central filler placed just behind the driver's head. The driver's seat was moved back a considerable distance on the frame as a result of eliminating the fuel reservoir which had previously existed between driver and engine, and also by reason of having twelve instead of sixteen cylinders. The basic principle of locating the tanks so that the trim of the car would not change as between the starting-line condition and mid-point during the race was retained, but the general handling characteristics of the D Type models were, however, noticeably different from the C Types of the preceding season.

This change was wrought by the use of a de Dion type rear end in place of the previous swing axle. Location sideways was by means of a transverse Panhard rod mounted barely 3 in. from ground level, thus bringing the rear roll centre down to the same height. The cross-tube had to be cranked downwards to clear the gearbox and necessary oscillation as between one side of the tube and the other was achieved rather more simply than in the case of Mercedes-Benz by having a floating bush adjacent to the left-hand wheel.

Both mechanically and geometrically the layout proved highly successful, but these benefits were achieved at the cost of considerable complication. Four Porsche universal joints were required for the driving shafts and twelve ball joints for various linkages, an interesting detail point being that all the Porsche joints were positively lubricated, the inner ones being within the differential box and the outer supplied by pressure oil delivered through the driving shafts.

The deflection of the rear springs was increased to 1 in. for a load of 175 lb. and was thus some 30 per cent softer than on the C model. A corresponding reduction in rate was given to the front wheels from 350 lb. per in. to 230 lb. per in. (52 per cent) and, simultaneously, the length of the Porsche-type trailing arms at the front was increased from 3.75 in. to 5½ in.

As before mentioned the geometry of the steering linkage on the C Type car was correct only with the wheels in the straight ahead position ; when they were on lock vertical motion resulted in considerable reactions being passed back through the steering box. The layout, as shown in a perspective drawing, was modified on the D Type with a view to providing correct geometry at all times.

The net result of all these modifications was to convert the Auto Unions from being pronounced over-steerers into being inherent under-steering cars, and on this score they could claim that in 1938-9 they inherited the basic stability which Mercedes-Benz achieved from 1937 onwards. Despite all these technical improvements, however, the D Type Auto Unions experienced a serious run of mechanical defects during their first season, and not until they had overcome these teething troubles during the 1938 season, and secured Nuvolari as their senior driver, were they in a position to challenge the Mercedes-Benz supercharged 3-litre cars which had the type number W154.

In 1938 Mercedes-Benz reaped the reward of having gone forward with a new chassis for the 1937 season, for as explained on an earlier page the W125 had been designed in 1936 to accommodate a 3.46-litre straight-eight engine, and it was, therefore, logical to use it as a base for the 1938 3-litre V12. As might be expected, a number of detail changes were made. Starting at the front of the car the position of the wishbones in relation to the wheel centre was modified and, going straight to the back, although the de Dion tube and suspension arrangements were virtually identical, considerable change was made in the transmission layout.

All the 750 kg. formula Mercedes-Benz employed a centrally placed propeller shaft, inclined downwards slightly, with an all-indirect drive to the half shafts. On the W154, however, the crownwheel and pinion was offset 10.8 in. to the left side of the car and the axis of the crankshaft was inclined both across the frame and downwards.

In addition Mercedes-Benz now decided to follow Auto Union practice of the previous years (and Delage of an even earlier date) by adopting five forward speeds.

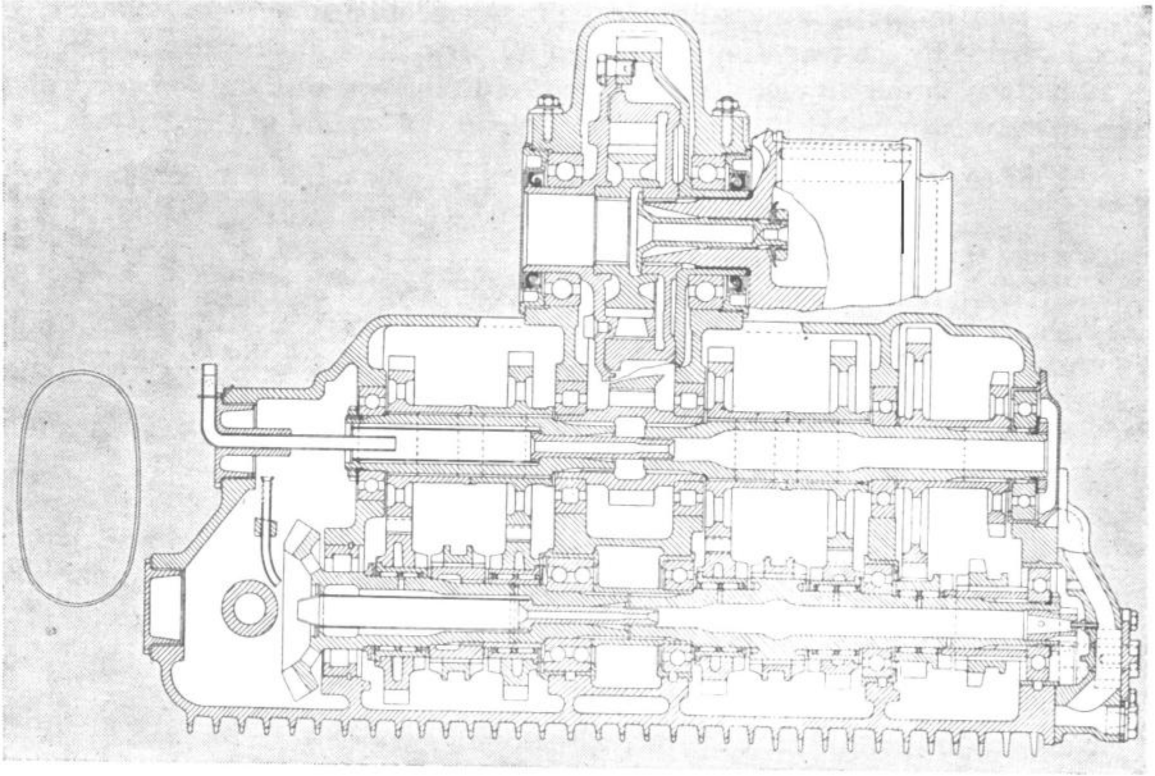

General layout of five-speed gearbox on Mercedes-Benz (1938-9).

As shown in both drawings and photographs the propeller shaft now ran between the driver's seat and the frame members and the height of the car was thereby reduced from 41 in. to 34½ in. The wheelbase was also shortened by approximately 2½ in. and thus became almost identical with the length of the W25 series with which Mercedes-Benz had started racing four years previously.

The frame remained virtually unchanged from 1937, using deep oval tubes of chrome molybdenum steel.

As with Auto Unions, so with Mercedes-Benz, the very great increase in specific consumption following upon the use of a highly supercharged 3-litre engine posed serious problems of tank capacity. The Stuttgart Racing Department made serious studies for supplementary side-tanks carrying twenty-nine gallons but rejected this solution owing to the liability to damage should the car leave the road. As an alternative they decided to dispose of seventy-five gallons of fuel in two separate reservoirs, one in the orthodox position forming the tail of the car, the other in a saddle-tank fitted under the scuttle.

Owing to the comparative shortness of the V12 engine (which is clearly shown in a side elevation of the car) a reasonable amount of space was available between the steering wheel and the back of the cylinder block, and this forward tank was given a three-point mounting so as to isolate it from chassis distortion. One filler was used, the two tanks being inter-connected by large bore flexible pipes. Two windows were placed in the side of the body so that the mechanic controlling the pressure refuelling apparatus could watch the level rise and cut off just before the tank was full.

Despite carrying approximately half the fuel in the centre of the wheelbase there was, in contrast to the Auto Union, a side-tank arrangement, a considerable change of trim in the Mercedes-Benz design. As mentioned on page 241, Volume I, the load carried by the rear wheels fell from 60 per cent on the starting line to 52-53 per cent halfway through a race and a rod control to the rear shock absorbers operated by the driver was provided to cope with this change of condition.

As the engine is fully described in Example 17, Volume I, it is unnecessary to deal with the details of its construction in this chapter. The overall position was, however, that although the capacity, compared with the Ml25 engine, was, by regulation, nearly halved the all-important piston area was reduced by only 24 per cent so that given equal b.m.e.p. and piston speed, viz. 252 lb./sq. in. at 3,400 ft./min., one would expect a conversion from 646 b.h.p. at 5,800 r.p.m. to 465 b.h.p. at 8,500 r.p.m.

Actually as first constructed the 3-litre engine gave 245 b.m.e.p. at 3,500 ft./min. despite the use of 20 per cent higher manifold pressure.

This shows clearly that the breathing of the engine was deteriorating somewhat due to the increase in r.p.m., and it is significant that at peak speed each sq. in. of inlet valve area was equal to 15.8 h.p., whereas the Ml25 engine had given 21.8 h.p. per sq. in.

In the course of development during 1938 the power of the Ml54 engine was raised to 476 b.h.p. at 8,000 r.p.m., the equivalent of 260 b.m.e.p. at 3,700 ft./min., but for the greater part of the 1938 racing season one may take it that the engine was giving approximately 450 b.h.p.

The 1938 car thus had some 200 b.h.p. less than the 1937 model and, contrary to one's first expectations, had the same frontal area as its predecessor and also weighed more. The V12, 3-litre engine alone weighed 72 lb. more than the straight-eight 5.66-litre unit, and the much larger gearbox and extra tankage brought the sum of the unladen weight up to 85 lb. more than the bigger car. Moreover, with seventy-five gallons of fuel the all-up starting line weight of the Type 154 came to 23.7 cwt., giving a figure of 380 b.h.p. per ton compared to 595 b.h.p. per ton for the W125. In addition, despite the reduction in overall height the frontal area was unchanged, so that the power per sq. ft. declined from 51.5 to 36 b.h.p.

In 1939 both Mercedes-Benz and Auto Union embarked upon two-stage supercharging and a number of minor chassis changes were also made by the former, the car having the new type No. W163. The engine weighed 45 lb. more than the Type M154 and the radiator was set very far forward from the cylinder block as shown very clearly in the side elevation drawing. The nose was simultaneously entirely altered in shape and the tail also modified, the total tankage being raised to eighty-eight gallons.

Perhaps the most important change of all, however, was the remarkable cooling system contrived for the brake drums which had considerable effect on the rate of retardation which could be exercised without incurring fade on one lap or excessive wear on the linings during the total distance of the race.

The Ml63 power unit gave only 4 per cent greater power than the final edition of the Type Ml54 at 7,800 r.p.m., but the valves would follow the cam contours up to 10,000 r.p.m., and between 4,000 and 7,500 r.p.m. there was a mean gain in b.m.e.p. of over 11 per cent as compared with the Ml54 as run at Rheims in 1938. This was derived not solely by increasing the manifold pressure by 20 per cent (from 2.2 Ata to 2.65 Ata) but also by considerable changes to the valve timing. The total inlet opening was raised from 266 degrees of crank angle to 287 degrees, and the overlap about top-dead-centre enlarged from 61 degrees to 71 degrees. This change notwithstanding, the two-stage D Type 1939 Auto Union was slightly superior to the Mercedes-Benz in maximum power and substantially better in h.p. per sq. in. of piston and valve area.

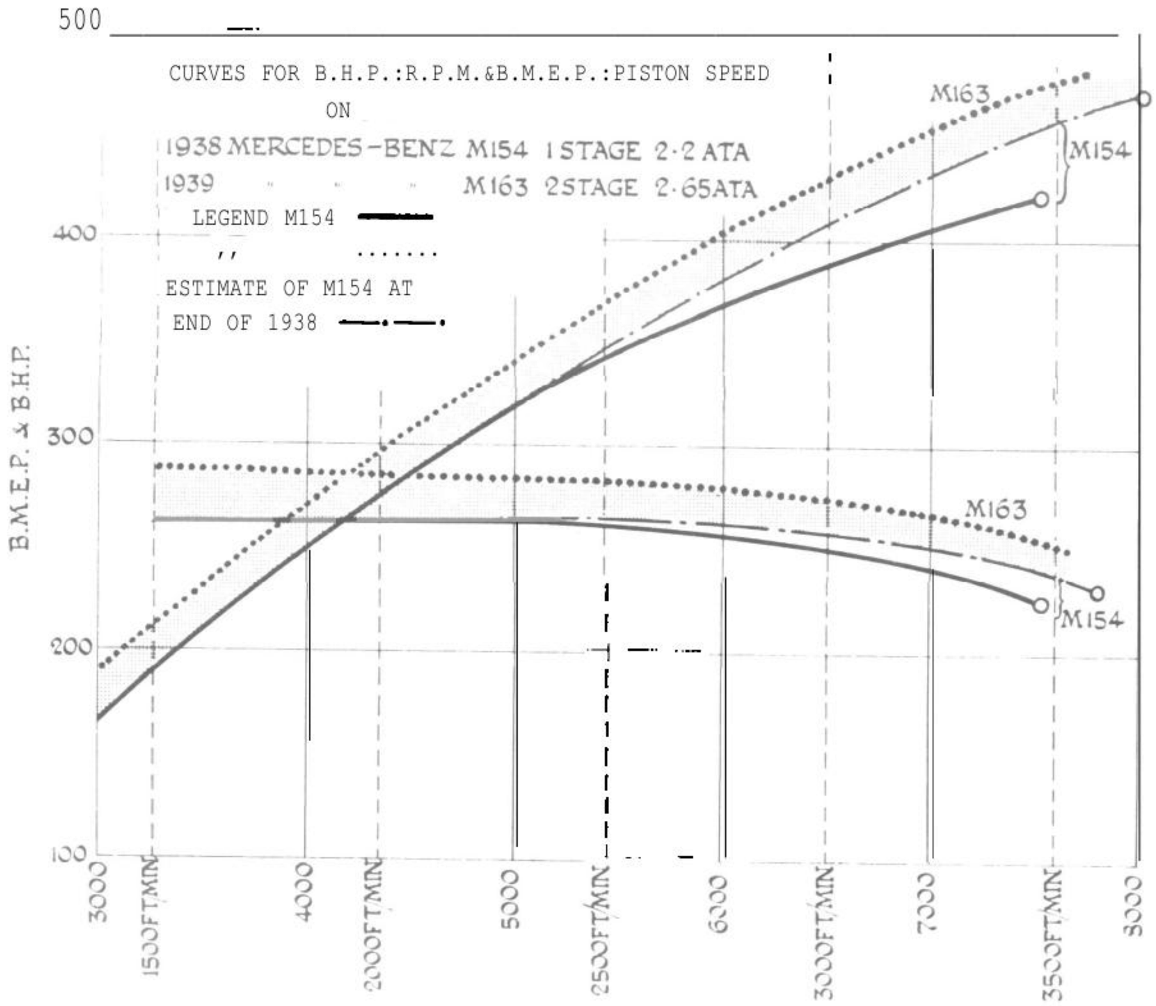

STATISTICS FOR RACING CARS 1930-9

	1932 *Alfa Romeo*	1934 *Alfa Romeo*	1934 *Auto Union*	1935 *Mercedes-Benz*	1936 *Auto Union*	1937 *Mercedes-Benz*	1939 *Mercedes-Benz*	1939 *Auto Union*
Cylinders	8	8	16	8	16	8	12	12
Bore M/M	65	69	68	82	75	94	67	65
Stroke M/M	100	100	75	94.5	85	102	70	75
S/B Ratio	1.54	1.45	1.1	1.15	1.13	1.085	1.045	1.15
Engine Capacity CM^3	2650	2900	4360	3990	6006	5660	2962	2990
B.H.P.	190	210	295	430	520	646	483	485
R.P.M.	5400	5400	4500	5800	5000	5800	7800	7000
B.H.P. per litre	71.5	72.5	67.5	108	85.5	114	164	162
B.M.E.P. Lb./In.2	172	175	200	242	230	256	270	305
Piston Speed F.P.M.	3550	3550	2220	3600	2900	3900	3600	3460
Piston Area sq.ins.	41	46.2	90	65	109.5	86	65.5	61.5
H.P. per sq. ins Piston area	4.65	4.55	3.28	6.6	4.75	7.52	7.4	7.9
Piston area sq. ins. per litre	15.4	15.9	20.6	16.3	18.3	15.2	22.1	20.6
Inlet valve area sq. ins.	14.8	14.8	23.7	22.5	23.7	29.6	26.5	16.9
H.P. per sq. ins. Inlet Valve area	12.85	14.1	12	17.7	22	21.8	18.3	28.6
Induction System	1.6 ata	1.6ata	1.6 ata	1.66 ata	1.87 ata	1.8 ata	2.65 ata	2.6 ata
Frontal Area sq.ft.	10.25	10.8	10.8	11.8	10.8	12.5	12.5	11.5
H.P. per sq. ft.	18.5	19.5	27.3	36.5	48	51.5	39	42.2
Weight cwt. unladen	15.2	15.7	16,2	16.8	16.2	16.4	17.9	16.7
Weight with crew and fuel	18.2	18.7	21.5	20	22.4	21.8	24	24
Engine litres per laden ton	2.9	3.1	3.9	3.99	5.35	5.2	2.46	2.5
Engine B.H.P. per laden ton	210	225	275	430	430	595	405	405
Max. road speed ; m.p.h.	140	145	175	185	205*	195**	195*	195*

*These cars had five speeds.

**The maximum speed of these cars on a G.P. course was determined by the " undergearing " desired to obtain maximum acceleration.

CHAPTER TWENTY

The Third Decade

THE end of the third decade of motor racing history coincided with the production of the world's fastest road-racing cars, but the margin of superiority held by the 1939 3-litre 500 h.p. designs over the 1937 650 h.p. types was a small one. It is legitimate to ask why, in fact, the former had any superiority at all, and it may help to put the problem in perspective if some of the relative data is tabulated :

	1937 Mercedes-Benz W125	1939 Type W163
Average Lap Speed Index (1906 Renault = 100)	163.5	165
Inferred Maximum Speed (square law)	193 m.p.h.	196 m.p.h.
H.P. per sq. ft. and	51.5	39
Inferred Maximum Speed (cube law)	204 m.p.h.	185 m.p.h.
Best Timed Speed	193 m.p.h. (Spa)	195 m.p.h. (Rheims)
Theoretical Average Index based on h.p. per sq. ft. (Sixth root law)	163.5	160

It is immediately apparent that the average speed index moves almost exactly with timed maximum speeds on the road (at Spa and at Rheims respectively), but the W125 car failed to reach its theoretical maximum by 5.5 per cent, whereas the Type W163 exceeded the theoretical speed by a like percentage. The deficiency on the larger car is easily explicable for within the limits of the four gears available the ratios were naturally chosen to give the best overall speed, and although peak r.p.m. coincided with 200 m.p.h. on the highest gear and the biggest tyre, on the lowest gear ratios (using the smallest wheels) only 122 m.p.h. was attained. A very large number of intermediate proportions between crankshaft and road speed could be fitted but even on a very fast circuit such as at Berne the best circuit speed of 107 m.p.h. was secured with a gear limiting the maximum to 160 m.p.h.

These changes do not affect the fundamental proposition that average speeds on a circuit vary as the sixth root of the h.p. per sq. ft., but with the W163 both maximum and averages substantially exceeded expectations based on this ruling. On this car five forward speeds eliminated the need for under gearing in the interests of the best possible acceleration, and it is instructive here to compare speeds available at 7,800 r.p.m. on the Type W163 with the W125 running at 5,800 r.p.m. :

RELATIVE ROAD SPEEDS AT PEAK R.P.M.
MERCEDES-BENZ W125 AND WI63

	I	II	III	IV	V
W125 (m.p.h.)	78	123	142	178	—
W163 (m.p.h.)	61	109	135	158	197

From the foregoing, it is patent that the W125 was normally undergeared, but equally on the above ratios the W163 was overgeared in that the b.h.p. per sq. ft. of frontal area should have been insufficient to reach peak r.p.m. in fifth speed. The two cars had identical frontal area, and on the cube law the Type W163 needed 47 h.p. per sq. ft. or 590 h.p. gross to reach 195 m.p.h. This was 100 b.h.p. or 22 per cent more power than the engine actually produced, and we are forced to conclude that the shape of the body on the W163 must have had a useful effect in reducing drag. A reduction in drag coefficient of about 15 per cent is needed to account for the timed speed in relation to power available, and although it has been taken as an axiom that changes in body form do not sensibly affect the drag coefficient this design seems the exception that tests the rule. If one studies the cars in detail the figures fall within the realm of reasonable probability.

An examination of the scale drawings shows, although both cars had a frontal area of 12.5 sq. ft., the body on the 1937 model was comparatively high and narrow with projecting front wishbones and rear suspension elements, and a high-mounted radiator core with a deep oval orifice having separate air entries for oil cooling. The front aspect of the 1939 model shows almost complete enclosure of the chassis parts and very low mounted radiator core with a wide intake.

Some of these features are even more vividly disclosed in the side elevations reproduced in this chapter. The comparatively blunt nose of the 1937 model will be seen at once, and the radiator core on the 1939 car was placed much farther forward so that the air exit behind it was correspondingly much freer. The importance of this particular feature is proved by the fact that advancing the core by 3½ in. as compared with the 3-litre W154 made it possible to reduce the depth of the element by one-third, from 6 in. to 4 in.

The cooling drag on the W163 has been estimated at 8 per cent and this is probably much lower than anything achieved on the W125, so that taking all the factors into consideration a reduction in drag coefficient from a Cw factor of, say, 0.65 to 0.55 is not unreasonable. Both of these figures may, indeed, seem unreasonably high, bearing in mind that a 1939 touring saloon car also had a Cw figure of 0.55, but for many reasons major reductions in drag by streamlining have not proved a practical operation on road-racing cars, although great progress was made in this direction on record-breaking cars between 1930 and 1939.

In the pre-Grand Prix era some designers, notably Gobron Brillie and Mors, went to some trouble to reduce wind resistance by using bonnets tapering to a knife-edge at the front, the radiator being separately mounted ahead of the front axle and thus in the correct position to receive air at maximum pressure and to discharge it with no loss due to back pressure. Mors (and the associated Turcat Méry) also pioneered the long tail body for road racing in the cars they ran in 1904.

These seeds fell on stony ground, but in 1914 Henri addressed himself to another aspect of the problem and produced a long cylindrical tail for the 4½-litre Peugeot cars. There is evidence that this was useful on high-speed tracks such as Indianapolis.

The next step was taken by those two highly original engineers, Bugatti and Voisin, both of whom sponsored cars of quite unorthodox shape which ran in the 1923 Grand Prix at Tours. Calculations based on speed and maximum power confirmed ocular evidence provided by dusty roads that these shapes were efficacious in

PLATE XXIII

THE DEVELOPMENT OF THE ROAD RACING BODY FORM

1920-39

Between 1906 and 1914. and especially between 1912 and 1914. the outward form of the Grand Prix car underwent a radical revision. Some side elevations shown in Volume 1 indicate that there was a marked drop in seat height derived from underslinging the rear springs, by cranking the frame over the rear axle and, in some cases, over the front axle as well. The type of body used. however, changed but little, and was simply of two bucket seats with shallow side-members, a transverse fuel tank and one or more spare wheels.

In 1914 both Peugeot and Fiat broke away from this convention and produced cars with long tails, the former make having two spare wheels mounted longitudinally in the tapering cigar-shaped form.

From this point onwards the changes in design, shape, and frontal area have been more subtle and these drawings have been especially prepared to a uniform scale so that successive stages can be readily followed.

TWO-SEATER DESIGN. – Until 1925 international regulations insisted on a driver and mechanic as the crew of the Grand Prix car and for this reason two-seater bodies were required.

The larger car shown in these two drawings – the 1920-1 Ballot – had a 3-litre, eight-cylinder, engine developing 107 b.h.p., and a feature of the body design was the marked offset between the driver's and mechanic's seat. Pronounced upsweep to the cowl gave good protection to each crew and the frontal area was approximately 12 sq. ft.

The Delage was designed three years after the Ballot for the 1922-5 regulations, and had a 2-litre V.12 engine. which in the 1925 supercharged version, developed 190 b.h.p. Staggered seating was continued, but both members of the crew placed much lower so that although there was little change in radiator height the frontal area was reduced to 11 sq. ft. This figure includes the cowling over the front axle which may well have reduced windage loss compared with the exposed front axle parts of the earlier car, despite the lesser frontal area of the latter.

A particularly interesting point brought out in these drawings is that comparatively small changes dimensionally have a big effect on the general appearance of the vehicle, this point being further emphasised by the study below of the differences between 2-litre and 1½-litre model Delage cars.

THE OFFSET SINGLE-SEATER. – From 1925 onwards only the driver had to be accommodated in the racing car and this led to the construction of offset single-seater chassis and bodies by Talbot and Delage for the 1926-7 1½-litre Grand Prix formula.

In the Delage design the crown wheel and pinion was offset approximately 4 in., to the left-hand side of the car, and this made it possible to mount the single seat to the right so as to avoid the need for giving clearance for a propeller shaft beneath it. The result, in the outline shown shaded in this drawing, was a remarkably low overall height with a frontal area of only 9½ sq. ft., features which appreciably improved both the performance and the stability of the car. The low mounted radiator on the 1927 model was placed ahead of the front axle so as to avoid fouling between the bottom tank and the axle beam.

CENTRAL DRIVING POSITION. – The success of the the 1932 P.3 Alfa Romeo Monoposto popularised a central driving position with a seat highly mounted above the propeller shaft. This gave a greater frontal area than the extremely low offset single-seaters of the 1926/7 period, but offered the driver an excellent and symmetrical view of the road.

This theme was continued by Mercedes-Benz with their 1934-5 Type W.25 A and B cars, but as these models had independent suspension to the rear wheels no provision had to be made for the rise and fall of the propeller shaft. Additionally the latter was offset downwards by using an indirect drive on all ratios. An effort was made to reduce wind resistance by providing deep fairing behind the driver's head, but the nose of the car remained blunt with a vertical rectangular air opening to the cowl.

By successive development through the 1936-8 period the V.12 cars in 1939 had a long tapering nose with a low set oval air intake. The height of the driving seat was considerably reduced by offsetting the propeller shaft to the left and driving the rear wheels through two indirect trains of gears giving an offset downwards of over 11 in. The difference in frontal area was as between 11.8 sq. ft. for the 1934 model and 12½ sq. ft. for the 1939, but the latter figure included an almost complete enclosure of all the chassis parts. It can be proved that the general shape and refinement of the 1939 car resulted in a useful reduction in drag, but comparing this model with the 1921 Ballot, one can see at a glance the immensely greater proportion of the frontal area represented by wheels and tyres, which are obviously extremely bad shapes from the viewpoint of wind resistance.

Hence with the greatest possible refinement in shape the wind resistance coefficient of the fastest 1939 Grand Prix car was only some 15 per cent less than the 1906 winner, although as frontal area had been reduced by over one-third the overall power needed at a given speed was reduced by over 40 per cent.

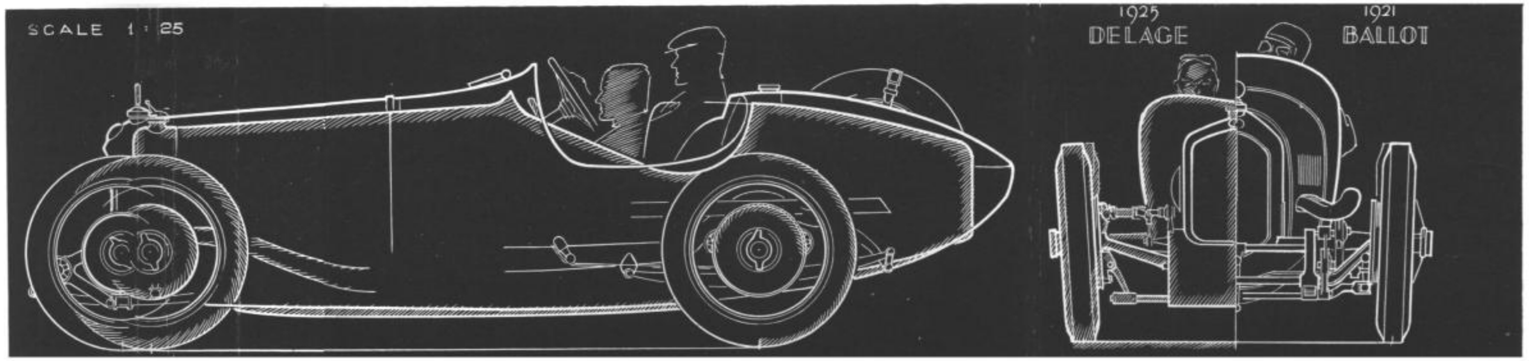

The 1920–1 3-litre Ballot and 1925 2-litre Delage

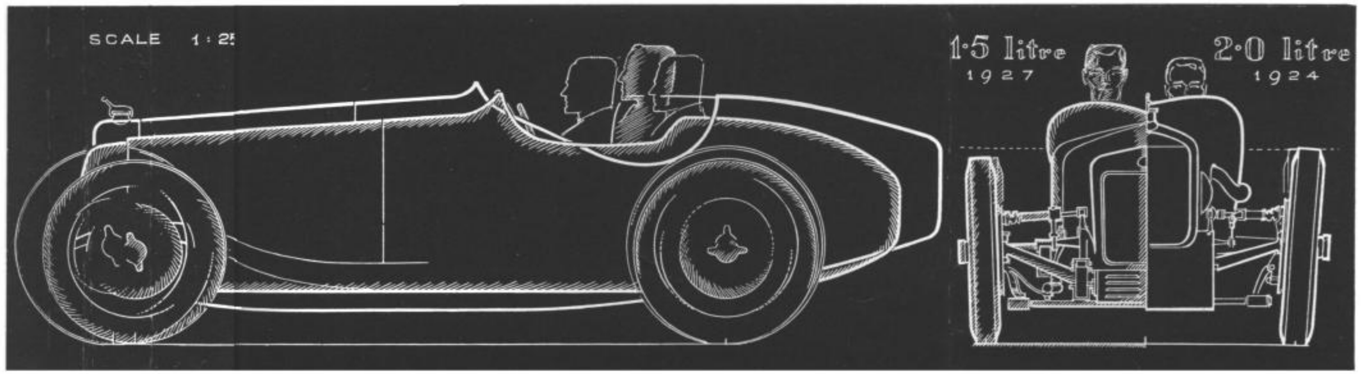

The 1925 2-litre Delage and the 1926-7 1.5-litre Delage

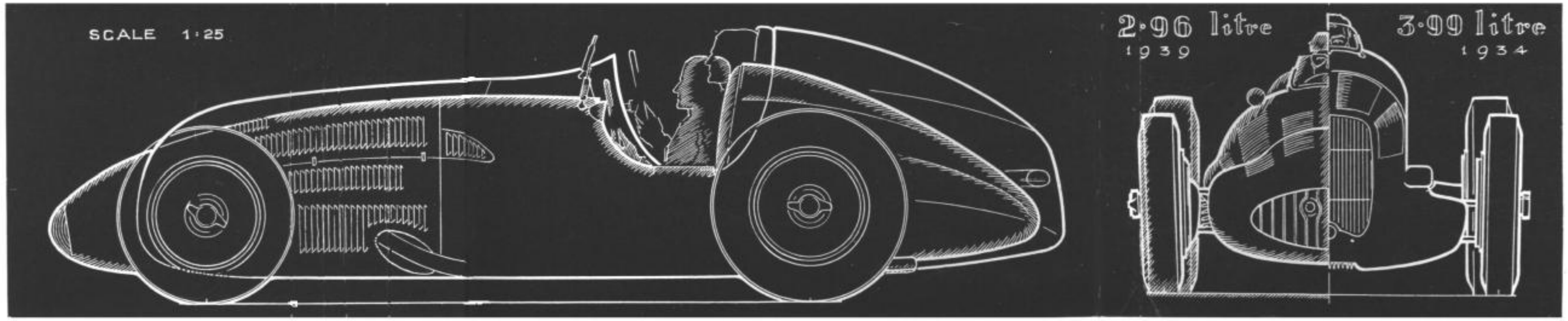

The 1934–5 3.99-litre Mercedes-Benz and the 1939 3-litre Mercedes-Benz reducing drag, but once again development along these lines was not continued and designers concentrated on obtaining minimum frontal area. This theme was continued throughout the third decade of Grand Prix racing, but concurrently both Auto Union and Mercedes-Benz amassed a great deal of data on really low drag body forms which they used for record breaking. For example, in 1935 a new body was developed in the wind tunnel of the Dresden Technical High School for an Auto Union record car. It was based on the road-racing model, but the cockpit was completely enclosed and fairings were placed behind the front wheels, the rear wheels being wholly encased. The suspension units were also covered up and although frontal area was increased by 25 per cent the Cw figure was reduced by 35.5 per cent, the overall drag thus falling by 20 per cent. On the road this car reached 199 m.p.h.

Two years later, in 1937, Auto Union built a fully enveloping body to be used on the A.V.U.S. track and for record-breaking purposes. In this design the frontal area was 45 per cent greater than the corresponding Grand Prix road car but, as the drag coefficient was reduced by 61 per cent, the overall wind resistance fell by 44 per cent. The car achieved a speed of 255 m.p.h. and did a standing lap of the twelve-mile A.V.U.S. circuit at 171.6 m.p.h., which compares with 165 m.p.h. obtained with the G.P. model. Mercedes-Benz also designed bodies of this type, and on the A.V.U.S. track lapped at 165 m.p.h. whereas as with the same type of engine fitted in the normal Grand Prix car the lap speed was only 159.5 m.p.h.

In 1938 Auto Union went further by designing a fully enveloping streamlined car for the French G.P. held on the very fast Rheims road circuit, but it proved more difficult to drive than the normal types and development work was suspended. During this year, also, Mercedes-Benz built a car with fairings over the front and rear wheels which they planned for use at Tripoli in 1939. The car never ran, as the race in that year was confined to 1½-litre cars, but a modification of the layout was used for standing-start records in the 3-litre class in February 1939. On the same occasion the 3-litre road-racing chassis attained 248 m.p.h. with a fully enclosed body.

Despite these experiments the gains derived from streamlining road-racing cars have been consistently outweighed by the disadvantages thereof. In particular, a reduction in drag brings the centre of wind pressure considerably forward of the centre of oscillation, the car becomes aerodynamically unstable and at high speeds particularly sensitive to cross-winds, such as may impinge upon it suddenly as, for example, when running out of a line of trees into open country. Moreover, nothing less than total enclosure of the wheels and suspension elements (which form half the frontal area) has any large effect on drag, for these parts are organically quite unrelated to the hull and quite impossible to streamline individually. The body in itself can be so shaped that it only offers 5 per cent of the entire resistance and changes in the form have, therefore, a quite negligible effect on the total drag.

Undoubtedly the worst handicap of the streamlined body is the increased all up weight, and, for example, the fully enclosed A.V.U.S. Auto Union car was 11 per cent heavier than the Grand Prix type. Both cars were run in record-breaking attempts over standing kilometres and standing miles and over a kilometre (i.e. 1,095 yds.) the Grand Prix car was the faster by 0.02 sec. Over the mile (1,760 yds.) the fully Streamlined type was the quicker by 0.81 sec. They would have dead-heated over a standing 1,400 yds.

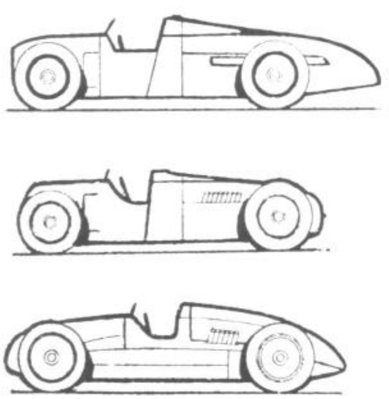

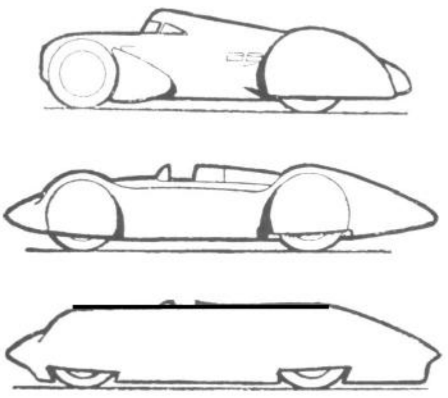

FIVE YEAR DEVELOPMENT – These 1 : 100 scale drawings show the development of Auto Union cars for road racing (left) and record breaking (right). Reading downwards, the left-hand drawings show the 1934 long-tailed car and immediately below it is the 1936 type with longer wheelbase, greater tank capacity, but shorter tail. Bottom left is the 1938/9, 3-litre car with the driver mounted farther back on the frame as a consequence of a shorter engine and side tanks in place of the previous centrally mounted fuel reservoir. In the right-hand column can be seen the record-breaking models of 1935. 1936 and early 1938 with maxima of 199 m.p.h., 252.5 m.p.h. and 270 m.p.h. respectively.

To sum up, by adopting fully streamlined bodies the maximum speed of the 1939 3-litre cars could have been raised by about 50 m.p.h., but acceleration would have been impaired and braking very seriously affected, not only by the greater weight, but also by reason of the lesser retardation brought about by wind resistance.

This brief resume of the facts may serve to explain why an apparently obvious way of increasing speed made little progress before 1939, but it must be read in conjunction with the abundant engine power available under the regulations which governed racing during 1934-9.

At the beginning of the decade racing cars were powered with engines of approximately 3 litres capacity developing 200 b.h.p. Exact figures of the weight of such engines are lacking, but 300 lb. may be considered typical. Progress during the lifetime of the 750 kg. formula was as follows :

	Engine Capacity	*Weight*	*Output*	*Weight per B.H.P.*	*Weight per litre*
1934 Italian Straight-eight . .	2.9 litres	300 lb.	210 b.h.p.	1.43 lb.	103 lb.
1934 Mercedes-Benz . . .	3.36 ,,	449 ,,	345 ,,	1.27 ,,	134 ,,
1934 Auto Union	4.36 ,,	540 ,,	295 ,,	1.83 ,,	124 ,,
1935 Mercedes-Benz	3.99 ,,	456 ,,	430 ,,	1.06 ,,	115 ,,
1935 Auto Union	4.95 ,,	540 ,,	340 ,,	1.58 ,,	108 ,,
1936 Mercedes-Benz	4.74 ,,	465 ,,	494 ,,	0.94 ,,	98 ,,
1936 Auto Union	6.01 ,,	540 ,,	520 ,,	1.08 ,,	90 ,,
1937 Mercedes-Benz	5.66 ,,	490 ,,	646 ,,	0.71 ,,	81.5 ,,
1937 Auto Union	6.00 ,,	540 ,,	520 ,,	1.08 ,,	90 ,,

Weight per litre fell steadily with increase in swept volume, a logical development since, with the exception of the 1937 Mercedes-Benz, the physical dimensions of the racing engines built during this period remained unchanged. Reciprocating weights also remained virtually constant despite an increase in cylinder bore size from 68 mm. to 75 mm. by Auto Union. In the Mercedes-Benz engines the diameters of the cylinder bores were successively raised from 78 mm. to 94 mm. On both cars r.p.m. remained almost constant, but the overall inertia forces were considerably increased by rising piston speeds.

Gas loadings also rose as boost pressures and compression ratios were both increased, but in the higher speed ranges these forces and those set up by inertia were counter balancing and this, coupled with the use of roller bearings, explains why reliable running was achieved.

Whereas, however, the Auto Union engineers claim that a set of plain crankshaft bearings and roller big ends could be used throughout a season, the Mercedes-Benz power units were more highly stressed and the components thereof were usually changed after two, or at the most three, races. The general dimensional differences between the two engines used between 1934 and 1937 under the 750 kg. formula are given in a detail table.

	Auto Union			Mercedes-Benz		
	1934 A	1935 B	1936 C	1934 25A	1935 25B	1937 125
Bore (mm.)	68	72.5	75	78	82	94
Stroke (mm.)	75	75	85	88	94.5	102
S/B Ratio	1.1	1.035	1.13	1.13	1.15	1.08
Cylinder Capacity (c.c.)	272.5	310	375	407	497	710
No. of Cylinders	16	16	16	8	8	8
Angle of V	45	45	45	in line	in line	in line
Swept Volume (litres)	4.36	4.95	6.01	3.36	3.99	5.66
Piston Area (sq. in.)	90	102.5	109.5	59	65	86
Connecting Rod Centres (mm.)	164	164	164	161	161	161
Distance between Cylinder Centres (mm.)	86	86	86	95	95	104
Main Bearing Diameter (mm.)	62	62	70	63	63	66
Crankpin Diameter (mm.)	58	58	68	55	55	63
Manifold Pressure (Ata.)	1.57	1.73	1.93	1.66	1.66	1.86
Compression Ratio	7.1	8.95:1	9.2:1	6.0	6.0	6.0
Maximum b.h.p.	295	375	520	302	430	646
At r.p.m.	4,500	4,800	5,000	5,800	5,800	5,800
Maximum b.m.e.p.	231	248	268	210	262	310
At r.p.m.	2,700	3,000	2,500	4,000	4,000	3,300
B.m.e.p. at Max. h.p.	200	210	230	203	242	256
B.H.P. per sq. in of Piston Area	3.28	3.66	4.75	5.15	6.6	7.52
At ft./min. Piston Speed	2,220	2,270	2,900	3,360	3,600	3,900

The immense gain in overall engine performance between 1934 and 1937 has been treated in detail in preceding chapters. It was derived almost entirely by greater engine size and higher mean effective pressures and whereas in 1934 a typical racing engine of the Italian school had 46 sq. in. of piston area, in. 1937 Mercedes-Benz engines used 86 sq. in., an increase of 87 per cent, and Auto Union 109.5 sq. in., an increase of 138 per cent.

Making a comparison of b.m.e.p. figures the typical 1934 car developed 185 lb. per sq. in. at the peak of the power curve, but the Auto Union C Type improved upon this by 44 per cent and the Mercedes-Benz Type 125 by 67 per cent and such large gains were out of all proportion to any change in absolute induction pressure which was raised by not more than 15 per cent during the period under review. Are we therefore asked to agree the apparently impossible proposition that the breathing of the best 1937 engine was some 50 per cent better than the 1934 type at equivalent boost pressures ? That is too simple an analysis, for the gain in power was compounded by (a) improved breathing (although not to the extent just indicated), (b) higher compression ratio and better combustion efficiency, (c) increased weight of charge, and (d) considerably higher mechanical efficiency.

The gain under heading (a) was probably limited to between 10 and 15 per cent and of the two factors (b) and (c) the latter was probably much the more important, particularly on the Type 125 Mercedes-Benz fitted with the auxiliary jet giving a great increase in fuel flow on full throttle. Results have been quoted showing that this in itself raised the power output by 14 per cent, chiefly owing to the reduction in mixture temperature and corresponding rise in charge weight, it being remembered that power output of an engine is strictly proportional to the weight of air burnt in unit time.

Exact figures of the relative mechanical efficiencies of racing car engines are hard to find but Auto Union learned that the full roller-bearing type of engine showed considerable improvement compared with a design using plain main bearings and roller-bearing big ends, so it is fair to infer that the difference would be even greater if the comparison were made between an all roller bearing unit and an all plain type.

It has been suggested by Mercedes-Benz engineers that the former would show a 10 per cent gain in power over the latter and if this figure be accepted all but 6 per cent of the 50 per cent difference above mentioned has been accounted for. This relatively small fraction can reasonably be ascribed to changes in compression ratio, improved plug position and similar details. Over and above these specific gains the German cars were, of course, outstanding in that the large efficiency engines produced by them were light and outstandingly reliable.

From 1934 the Italians fell farther and farther behind in power output ; in fact, from 1936 onwards they were outclassed by between 100 and 200 b.h.p. This was a reflex of the vastly greater engineering effort in terms of cash and man-hours which went into the production of the German cars and, confining our attention to them for the moment, we observe that similar ends were secured by utterly opposite means.

The dimensional differences between Mercedes-Benz and Auto Union engines have been tabulated, but the constructional variations are even more striking in that both the main forms and detail layouts had nothing in common :–

AUTO UNION SUSPENSION SYSTEMS 1934-8

(I) In 1934 the A Type Auto Union had a transverse leaf rear spring mounted very high at the back of the car. In conjunction with the swing axle this produced an exceedingly high rear roll centre leading to great stiffness at the back of the car and consequent natural over-steeritg qualities.

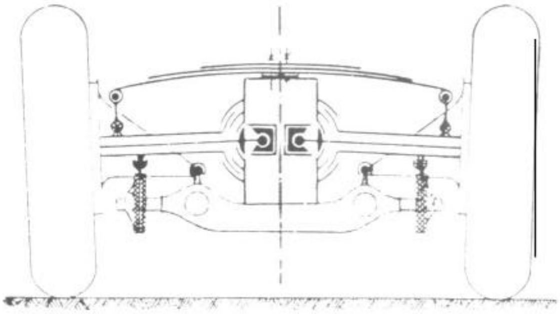

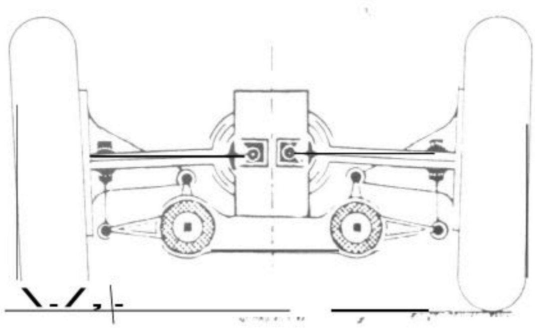

(2) In 1935 the system was modified to embrace torsion bars in place of the previous leaf spring. This resulted in a considerable saving in weight and a reduction in spring stiffness to 230 lb. per in.; the rear end geometry was unchanged.

(3) At the cost of considerable mechanical complication the 1938-9 3-litre cars were equipped with de Dion type rear axle. This drawing shows the change to four universal joints and the layout of the transverse de Dion tube with Panhard rod to give a sideways location. It will be noted that the de Dion tube can oscillate in a bearing adjacent to the left-hand hub. By this means the roll centre at the rear is considerably lowered and in conjunction with a softening in the suspension of 1 in. per 175 lb., over-steering tendency of previous models was eliminated.

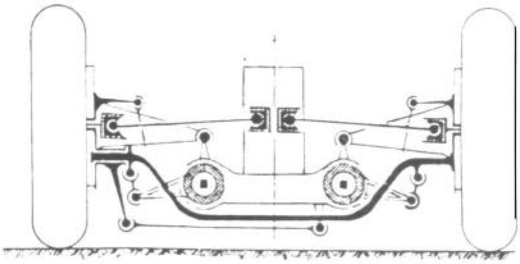

AUTO UNION BODY FORMS 1935-7

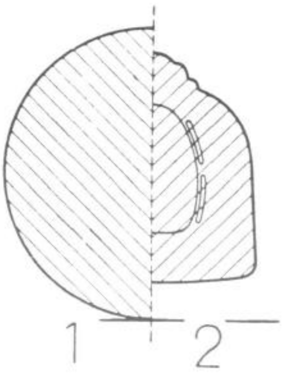

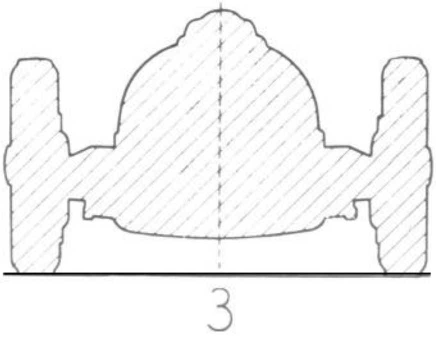

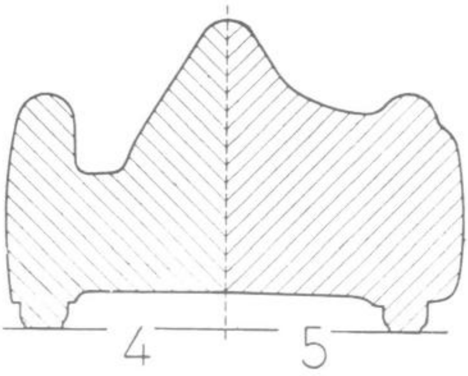

The total frontal area of the 1936-7 Auto Union car shown in Figure 3 amounted to 10.8 sq. ft., equivalent to the circle shown in Figure I. Figure 2 shows the bare hull of the G.P. car with a frontal area of 5.96 sq. ft. This hull had a drag coefficient factor (Cw) of only 0.057 which was under 10 per cent of the figure for the complete car which had a drag coefficient figure Cw 0.61. The overall drag of the bare hull was, therefore, only 5 per cent of the total wind resistance of the complete Grand Prix car.

Figures 4 and 5 show the record-breaking cars built in 1935 and 1938 with frontal areas 25 per cent and 45 per cent greater than the Grand Prix car but with overall drag reduced by 20 per cent and 44 per cent respectively by reason of a reduction in wind resistance coefficient Cw to 0.393 and 0.200 in each case.

CONSTRUCTIONAL DIFFERENCES OF 750 Kg. FORMULA
AUTO UNION AND MERCEDES-BENZ ENGINES

	Auto Union	Mercedes-Benz
Number of Cylinders	16	8
Arrangement of Cylinders	V	In line
Cylinder Construction	Detachable wet liners	Steel forgings
Cylinder Type	In one with crankcase	Detachable blocks
Water Jackets	In one with crankcase	Welded steel sheet
Cylinder Head Type	Detachable	Integral with bores
Cylinder Head Material	Light alloy	Steel
Number of Valves	2	4
Valve Angle	90 degrees	60 degrees
Number of Camshafts	1	2
Main Bearings	Lead bronze	Roller
Big Ends	Roller	Roller
Connecting Rod	One-piece	Split big end
Crankshaft	Hirth built-up	One-piece

Overriding these divergences in engine design the Mercedes-Benz cars had normal front engine position, but Auto Union used a rear engine mounting.

The Auto Union engine was the heavier of the two, and as there was very little difference in the weight of the cars, it may be fairly claimed that the rear end design resulted in some weight saving. There can be no question that it produced a lower built car and less frontal area. There can, equally, be no question that in its 750 kg. formula manifestation the rear-engined Auto Union was a considerably more difficult car to handle than the Mercedes-Benz, particularly in 1937 after the latter had adopted the de Dion rear axle.

Some figures have been cited in Chapter 18 bearing upon this point and interesting confirmation has been received from Hans Stuck who was the original leading driver for Auto Union. He resigned from this team after the Italian Grand Prix in 1937 and in the subsequent Masaryk Grand Prix at Brno attended as a spectator. When the Mercedes-Benz team had ended their official practice he was invited to try one of the W125 cars on which the fastest practice had been put up by Lang at 93.8 m.p.h. After only one lap to gain experience of the new car Stuck did a circuit at an average of 94.2 m.p.h. without, as he has explained, taking more risks than were normal in his previous experience with Auto Unions. He returned to the latter team during 1938 and although he confirms that the handling of the smaller cars with de Dion rear axles was an improvement over the previous types he remains convinced that although there may be engineering advantages to be derived from a rear engine location stability is best obtained with the normal forward mounting.

The technical aspects of independent front and rear suspension have been mentioned in Chapter 27, and it is only necessary to recapitulate briefly that during the three racing seasons 1934-6 wheel travel was limited and, in consequence, the full advantages of independent front suspension were not realised.

There is no evidence that independent suspension systems were in themselves an aid to average speed, although paradoxically there is definite proof that improvements in all-round roadworthiness on cars with rigid axles made a marked difference to lap speeds in the first two years of the third decade. This notwithstanding, no car with a rigid front axle won a major race after July, 1935, and no car with a torque tainted rear axle was successful in major events after August, 1935.

The most sensible appreciation of the value of the early types of independent front suspension would be to say that they made possible greater circuit speed derived from very big increases in engine power, and it is probable that the biggest contribution to this end was derived from independently springing the rear wheels rather than by using independent front suspension.

An exact assessment of the merit of these new designs is obscured by the changed handling characteristics. The combination of large surplus engine power with swing axle geometry made the German cars violent over-steerers, but, at the same time, the elimination of torque effect made a profound difference to the possible acceleration. Some measure of the progress which was made can be deduced from the standing kilometre speeds put up by formula racing cars as follows :

Maserati 2.9-Litre : 88.87 m.p.h., 23rd March, 1934. A.I.231.
Auto Union (B Type) : 101.56 m.p.h., 20th October, 1934. A.I.254.
Auto Union (C Type) : 117.3 m.p.h., 26th October, 1937. A.I.254.

By 1936, however, it was becoming increasingly evident that the swing axle system presented serious problems of road holding. These were caused by variations of toe-in as radius arm controlled wheels rose and fell and, more important, by gyroscopic reactions from heavy, large section, tyres.

The revival of the de Dion type of axle by Mercedes-Benz in 1937 may, therefore, be considered as much a milestone in design as the adoption of all independent suspension by Auto Union and Mercedes-Benz three years previously.

The introduction of the limited slip differential was a great aid to acceleration, for even with one rear wheel clear of the ground a useful propulsive effort was maintained. **A** drawing shows the essential elements of the device and two curves show the essential differences in performance between a rear axle equipped with this device and the alternatives of solid axle or the normal gear-type differential.

Both when cornering, and when the power available is greater than the adhesion factor, traction is considerably improved when the Z.F. differential is used. The reason for this in brief is that the Z.F. mechanism is inherently inefficient and the disproportion between power input and power output rises with change in speed between the inner and outer wheel. On very sharp corners 50 per cent of the input power may be absorbed in the friction set up by the Z.F. mechanism and this in itself makes it more difficult to spin the wheels, a particularly valuable feature on the 1937 cars which had so high a power : weight ratio that excessive wheelspin and loss of control was only avoided by the most delicate use of the throttle. A further drawing shows the principle of the Z.F. differential which was used by both Auto Union and Mercedes-Benz.

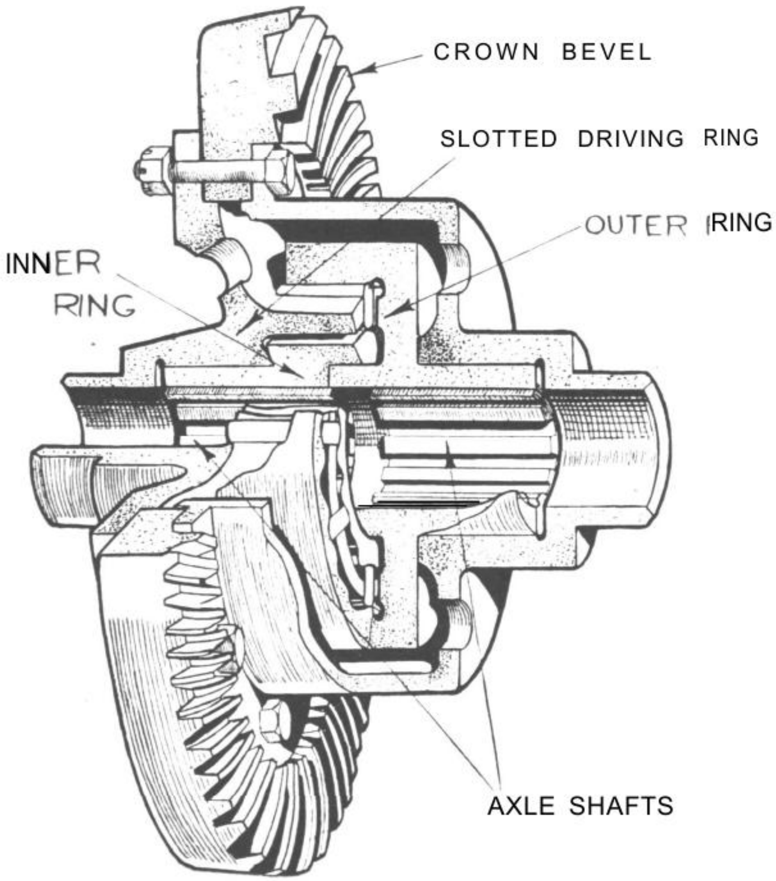

Mercedes Z.F. differential.

COMPARATIVE GRAPHS RELATING TO Z.F. DIFFERENTIALS

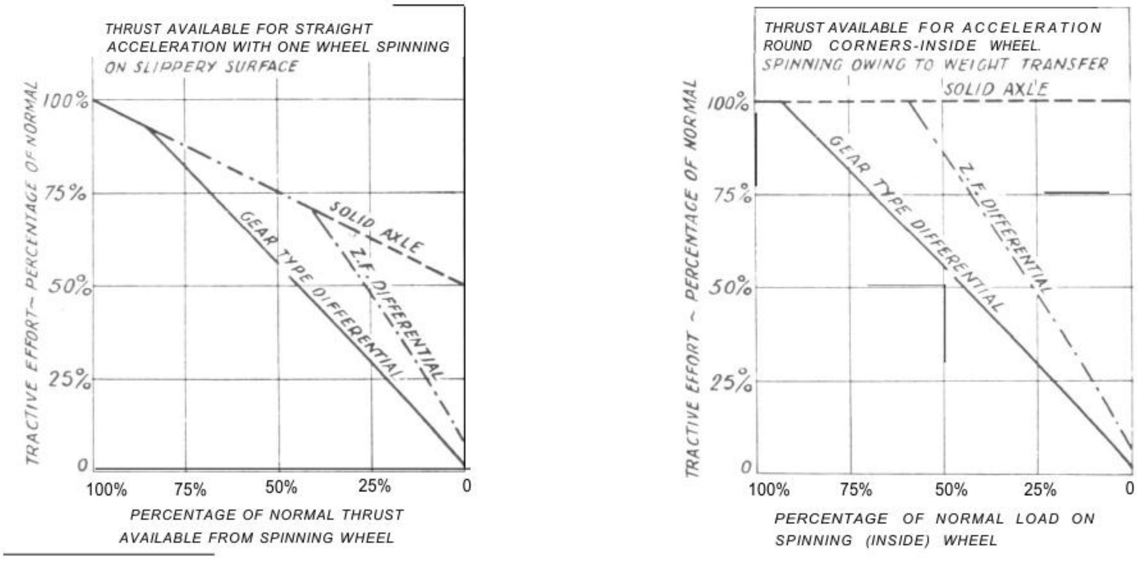

Apart from major changes in design the third decade of motor racing was notable for its useful advances in metallurgy and fabrication. In particular the art of welding thin wall steel tubes into frame and body structures made it possible to provide the very stiff frames called for by independent front suspension systems without running over the limit of weight imposed by regulations. The latter made it necessary for every detail of the car to be executed with the weight factor in mind and the reliability of the 750 kg. cars is, therefore, all the more remarkable. In the 1937 season, for example, Auto Union entered 33 cars for 10 races, and had only 3 retirements for mechanical reasons. The Mercedes-Benz record was 38 cars running in 10 events with 5 withdrawals caused by mechanical failure.

The capacity limit regulations introduced in 1938 and valid for the succeeding year destroyed these fine records. In these two years 16 Auto Unions broke down out of 45 entered in 13 races, and Mercedes-Benz retirements due to mechanical trouble were 16 cars out of 48 entries in 16 races.

As we have seen the German 3-litre engines both had twelve cylinders arranged in a V, but both continued with the same basic design as in previous years, so that the marked differences in engine construction continued. Dimensionally the engines compared thus :

	Auto Union D Type	*Mercedes-Benz Ml63*
Bore (mm.)	65	67
Stroke (mm.)	15	70
S/B Ratio	1.15	1.04
Cylinder Capacity (c.c.)	249	249
No. of Cylinders	12	12
Angle of V	60	60
Swept Volume (litres)	2.99	2.99
Piston Area (sq. in.)	61.5	65.5
Connecting Rod Centres (mm.)	168	148
Distance between Cylinder Centres (mm.)	86	93
Main Bearing diameter (mm.)	70	60
Crankpin diameter (mm.)	66	54
Maximum b.h.p.	485	483
At r.p.m.	7,000	7,800
Maximum b.m.e.p.	345	285
At r.p.m.	4,000	4,000
B.m.e.p. at maximum h-p.	305	270
B.h.p. per sq. in. of Piston Area at ft./min. Piston Speed	7.9 at 3,460	7.4 at 3,600

If these figures be compared with those obtained on the engines built under the 750 kg. formula it becomes apparent that piston speeds changed but little but absolute manifold pressure was raised by some 55 per cent to give an increase in b.m.e.p. of 10 per cent. This apparently poor return was undoubtedly due to the increase of 35 per cent in the peak r.p.m. for obviously at nearly 8,000 r.p.m. the problem of maintaining satisfactory breathing through the valves was considerably greater than at the more modest figure of 5,800 r.p.m.

This was shown with the first 3-litre engines using single-stage blowing, which showed a marked deterioration in both power per sq. in. of piston area and b.m.e.p. compared with the larger, slower turning, engines used in the previous year. Thus higher boost pressures were required to restore the situation and as mentioned in previous chapters they hinged upon the use of some form of compressor with internal com,pression, or the use of Roots displacers mounted in series so as to limit the pressure rise across each stage.

As explained in Chapter 21 the characteristics of the centrifugal type of compressor make it completely unsuitable for road racing and all Vane type pumps embody some out-of-balance mechanism which limits their maximum reliable running speed. Although the Vane type has some superiority in displacement per revolution compared with an equivalently sized Roots blower, a mechanism required to run at say two-thirds engine speed must obviously be far more bulky than a Roots type running four times faster, i.e. at 2.5 times engine speed.

On a 3-litre engine, requiring a total air flow of over 30,000 litres a minute, the size of any Vane type compressor running at less than a multiple of engine speed would indeed be prohibitive and for this reason in 1939 both Mercedes-Benz, who had consistently used Roots blowers for some 15 years, and the Auto Union Group, whose motor-cycle component had had much successful experience with Vane type compressors, decided to use the Roots type pumping through two stages.

The entire volume of a blower having no internal compression has to be delivered against the existing contra pressure. Thus if, for example, in one revolution of the blower 2 litres of mixture is delivered against a 25 lb. contra pressure the work done may be assessed as 2 litres by 25 lb. or 50 work units. But if a second blower of 1.4 litres capacity be interposed between the first stage and the engine the sequence of events will be as follows. The first stage will deliver two litres against a back pressure of 9½ lb. per sq. in. absorbing 19 work units in the process. By virtue of the compression of the charge the second stage will receive 1.4 litres compressed to 9½ lb. above the atmosphere and will feed them into the engine against 25 lb. back pressure, the pressure difference thus being 15½ lb. The product of volume by pressure (1.4 x 15.5) may be considered as 22 work units making the sum for both stages 41 work units and lowering the power required to compress 2 litres up to 25 lb. by 18 per cent.

On the 1938 3-litre Mercedes-Benz the single-stage blower drive absorbed some 150 b.h.p. and it will be seen that on the above theoretical example a saving of some 30 b.h.p. might be possible by using two stages. The issue was, of course, more complicated because in addition to adding a stage of boost the absolute manifold pressure was also raised, but as shown in some curves there was a substantial net gain following from the change in the blower system.

It should also be put on record that Mercedes-Benz designed a direct fuel injection system on their twelve-cylinder engines and carried out trials on two single cylinder test units. As one might expect, this reversion to the obsolete practice of passing air only through the superchargers gave distinctly disappointing results. On a 400 c.c. test cylinder with fuel injection 146.3 h.p. per litre was realised with 3,500 f.p.m. piston speed ; on a 187 c.c. test cylinder 166.5 h.p. per litre was realised at 2,600 f.p.m. piston speed with normal carburation.

SIDE ELEVATION OF RACING CARS 1934-9

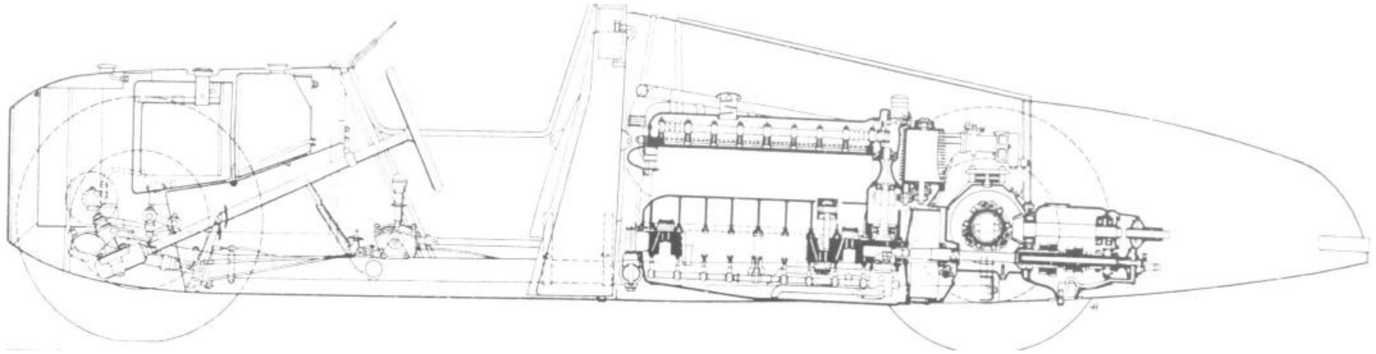

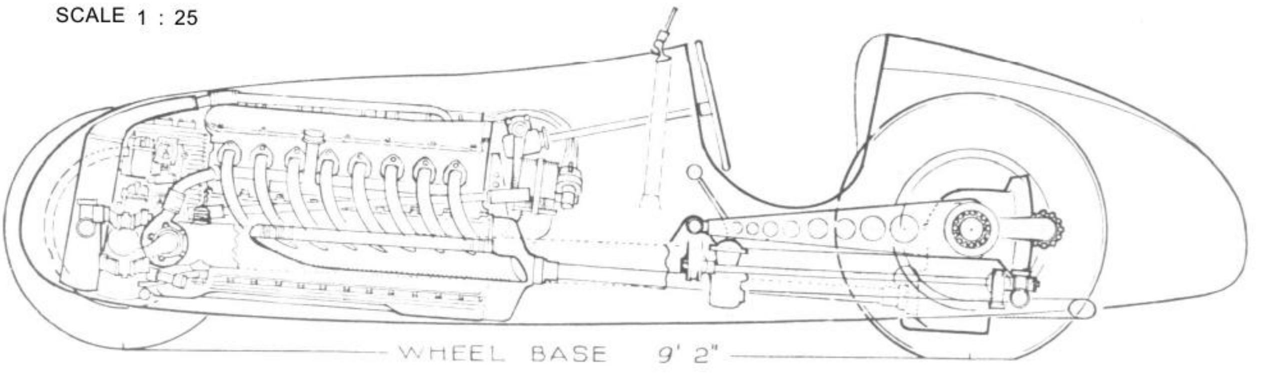

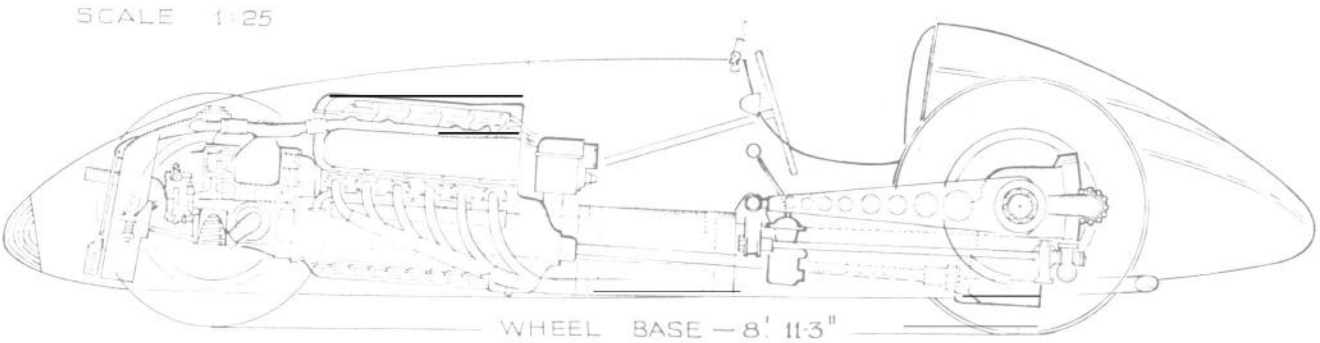

Top : 1934 Auto Union A Type
Centre : 1937 Mercedes-Benz Type 125
Bottom : 1939 Mercedes-Benz Type 163

As under the 750 kg. formula, so under the 3-litre restriction, Auto Union placed the engine behind the driver and Mercedes-Benz in the orthodox position, but both cars had wholly different handling qualities to their predecessors. As between 1934 and 1939 the spring rate on the Mercedes-Benz was decreased by 40 per cent at the front and 66 per cent at the rear. On the Auto Unions the rate of suspension between these years was lowered by 50 per cent at the front and 40 per cent at the rear, and in 1939 both cars had de Dion type rear axles.

A very full account of the suspension characteristics of the two makes is given by Cameron Earl in his B.I.O.S. Report No. 1755 (" An Investigation into the Development of German Grand Prix Racing Cars between 1934 and 1939 "), which is one of the few works which should be considered as obligatory reading by the serious student of racing car design.

The changes in the Auto Union rear-axle layout are shown in some drawings. The roll-centre on the swing axle cars can be fixed by drawing a line from the centre of the tyre tread through the centre point of the spherical bearings, but on the de Dion axle the roll-centre is about the articulations of the transverse Panhard rod. Thus, on the earlier cars the value of the roll-couple at the rear was far higher than at the front, but on the 1938-9 models this no longer obtained and both Auto Union and Mercedes-Benz became fundamentally understeering vehicles. There was so much power available on the rear wheels, however, that wheelspin could, despite the Z.F. differential, be induced at will, and by this means the attitude of the car on a curve could be controlled accurately by the skill of the driver.

In the opening pages of Volume I the author explained how Grand Prix racing had been started, largely as a political manœuvre to demonstrate the superiority of French cars and how, in the last five years preceding World War II, it became again primarily a political instrument, but at this time to demonstrate the merits of German engineering. There are also similarities in the physical aspect. In the first decade of motor racing, design went through three distinct phases ; in the second there was a line of continuous development ; but the third decade, again, may be considered as a composition in three movements.

In the opening three years the classic racing car, in the form of the P3 Alfa Romeo, the Type 59 Bugatti, and the 2.9-litre Maserati, reached its zenith. All of these cars had straight-eight engines with detachable iron cylinder blocks and used plain bearings throughout. All developed *circa* 200 b.h.p. and transmitted the drive to a rigid rear axle, albeit the P3 Alfa Romeo employed an ingenious double propeller-shaft arrangement which offered definite technical advantages in the matter of road holding.

1934 and 1935 saw the introduction of entirely novel designs from east of the Rhine, with independent suspension for all four wheels, tubular frames, rear engine mounting, and, above all, a detailed engineering technique which raised power from 200 b.h.p. to 400 b.h.p., and thus brought these cars into a class of their own. After 1934 Bugatti and Maserati virtually dropped out of competition, and although Alfa Romeo made desperate efforts to offset deficiencies in output by first-class road-worthiness they failed to meet the further tremendous advance in engine power achieved by the German cars in 1936 and 1937. Finally, in the last two years of racing emphasis shifted from gross h.p. to higher r.p.m., increased supercharge pressures and high b.m.e.p.

Road speeds rose very sharply in comparison with previous periods.

In the quarter-century spanning 1908 and 1932 the maximum speed of the road-racing car rose 36 m.p.h. from 104 m.p.h. to 140 m.p.h. This increase was matched in the next two years, and in 1935 a G.P. car averaged 195 m.p.h. over a distance of five kilometres. In short, for twenty-five years the increase in maximum speed was at the rate of 1.5 m.p.h. per annum ; from 1934 to 1936 it was at the rate of 16.4 m.p.h. per annum, a ten-fold gain.

This great acceleration in the rate of progress was almost directly proportional to the total resources made available for engineering development. Both Auto Union and Mercedes-Benz spent over £500,000 per year in 1954 values, equivalent to, say, one million man-hours, or each at least five times more than say Sunbeam in 1922-5. The methods followed by Auto Union and Mercedes-Benz varied, however, as much as did the machines which they constructed and raced.

The Mercedes-Benz main drawing-office and works was responsible for the design and production of all the racing cars which were handed over to a racing service department for development. In this section four engineers of degree status worked under Herr Uhlenhaut and there were fifty mechanics in direct charge of ten complete cars, and a further ten spare engines, with 220 fitters and mechanics available as required. The racing service department had eight diesel lorries, one equipped as a mobile workshop and another, with a supercharged engine, for the transport of urgently required spares.

Experimental work was largely of the *ad hoc* variety and in the last three racing seasons Uhlenhaut travelled with the racing team so that he could directly observe the performance of the cars.

In the case of Auto Union a separate establishment was formed which carried out the entire process of the design, construction, and development under two heads. Design and construction was controlled by four degree status engineers working under Dr. Siebler and the development section was headed by Prof. Dr. Ing. Eberan von Eberhorst, assisted by two engineers.

During the racing season approximately 200 mechanics and fitters were available to look after approximately eight cars, four of which were generally entered for each race. In addition to the driver, each car was allocated a head mechanic and three assistants, and this car-driver-mechanic team was, as far as possible, maintained throughout a given year.

The general standard of equipment was a good deal lower with Auto Union than Mercedes-Benz, but, on the other hand, the former carried out a good deal of basic research with full instrumentation, and brakes and suspension units were given detailed component development tests. In both companies extensive use was made of pre-tested components, that is to say fuel pumps, steering gears, superchargers, and many other parts were given routine performance tests before being assembled on to the car, and Mercedes-Benz also had at their disposal a chassis dynamometer.

CHAPTER TWENTY-ONE

The Development of The Grand Prix Car

1906 - 39

THE word development in the heading of this chapter has been chosen with care and is stressed by intention. Some might think that Grand Prix cars built solely for maximum performance and with little thought for manufacturing cost and operating economy would be excellent subjects for inventive exercises which could not be justified on the production car, but this has not been so.

Nearly all the worth-while inventions of automobilism had been lodged in the Patent Office before the first Grand Prix of 1906, and the few remaining discoveries virtually coincided with the early period of Grand Prix racing. Hence, when the cars came on to the line for the first Grand Prix the principle of the spur-type gearbox had already been laid down by Panhard; Renault employed a live rear axle in 1900 and Mercedes had developed the gate change, the honeycomb radiator, and Brasier overhead camshaft engines. Inclined overhead valves had been used by Pipe, Fiat and others, tubular frames by Gobron Brillié; light alloys were in extensive use, having, in fact, been employed by Panhard in 1897, and applied thin copper water jackets were known. Independent front wheel suspension had been used on some of the earliest cars and was represented in the 1899 Tour de France on the 20 h.p. Bollée. Supercharging was successfully used in the U.S.A. as early as 1907, and although the introduction of independent rear suspension to racing was delayed until 1923, the de Dion axle arrangement was patented in 1894 by Count Albert de Dion. Although in this matter the relation of Trepardoux and de Dion remains, as mentioned earlier on, speculative, the original drawings which are reproduced show clearly that the scheme was allied to a steam power plant, and it is interesting that the principal patent claim of de Dion is for a half-shaft carried through the hub so that by additional spokes it can drive direct on to the rim of a wooden wheel, leaving the main spokes of the latter unstressed. The fact that the basic de Dion axle was adopted by the two leading racing-car constructors some forty-three years after the original patent application is an extreme example of the fact that the engineering story of Grand Prix racing has been primarily one of development along a continuous line of tradition, and there is literally no record of a brilliant invention making existing designs obsolete overnight.

The story of this development has been narrated chronologically in the preceding chapters of this work, but it seems desirable to analyse the history of Grand Prix racing, not only in terms of time, but also under the headings of the various factors and qualities which must be embodied in the racing car. These may be set out for clarity as follows:

(a) Laden weight.

(b) Wind resistance compounded in turn of frontal area and the drag coefficient.

(a) and *(b)* are *the fundamental contra forces* which have to be overcome by

(c) Total power available at the road wheels.

In relation to *(a)* and *(b)*, *(c)* gives us:

(d) Power : Weight ratio.

(e) Power per sq. ft. of frontal area.

Plate XXIV

THE 1914 4½-litre VAUXHALL

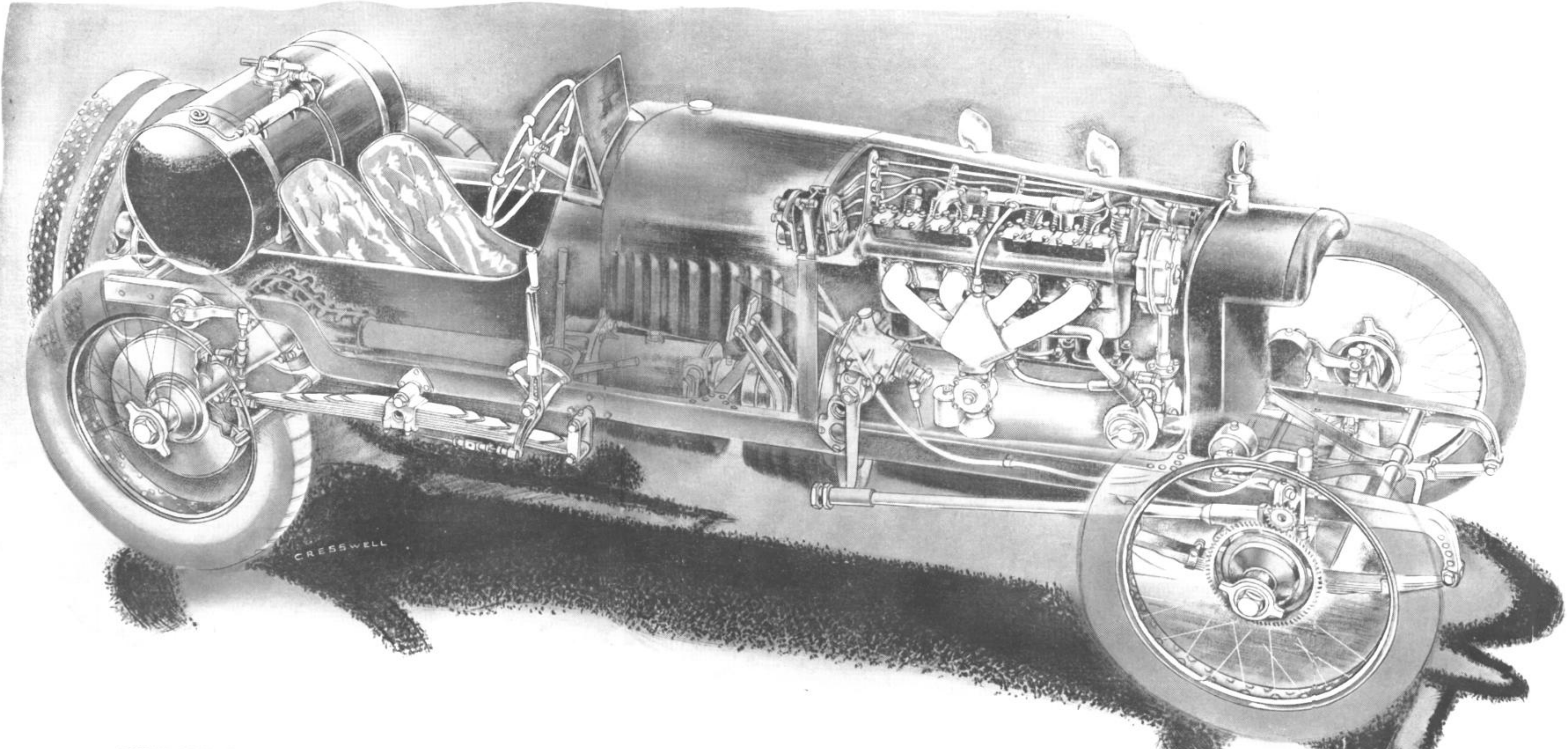

LINEAR DEVELOPMENT, 1: The 4½-litre four-cylinder Vauxhall designed for the 1914 Grand Prix at Lyons was unready for the race but proved itself later to be one of the fastest cars of its time. As shown here, the front springs passed through the front axle and the rear axle was located by cantilever springs. The gearbox casing formed part of the torque tube drive for the live rear axle and one of the two overhead camshafts drove the scuttle-mounted magneto. Small vane-type hydraulic dampers were used.

THE 3.3-litre BUGATTI Type 59

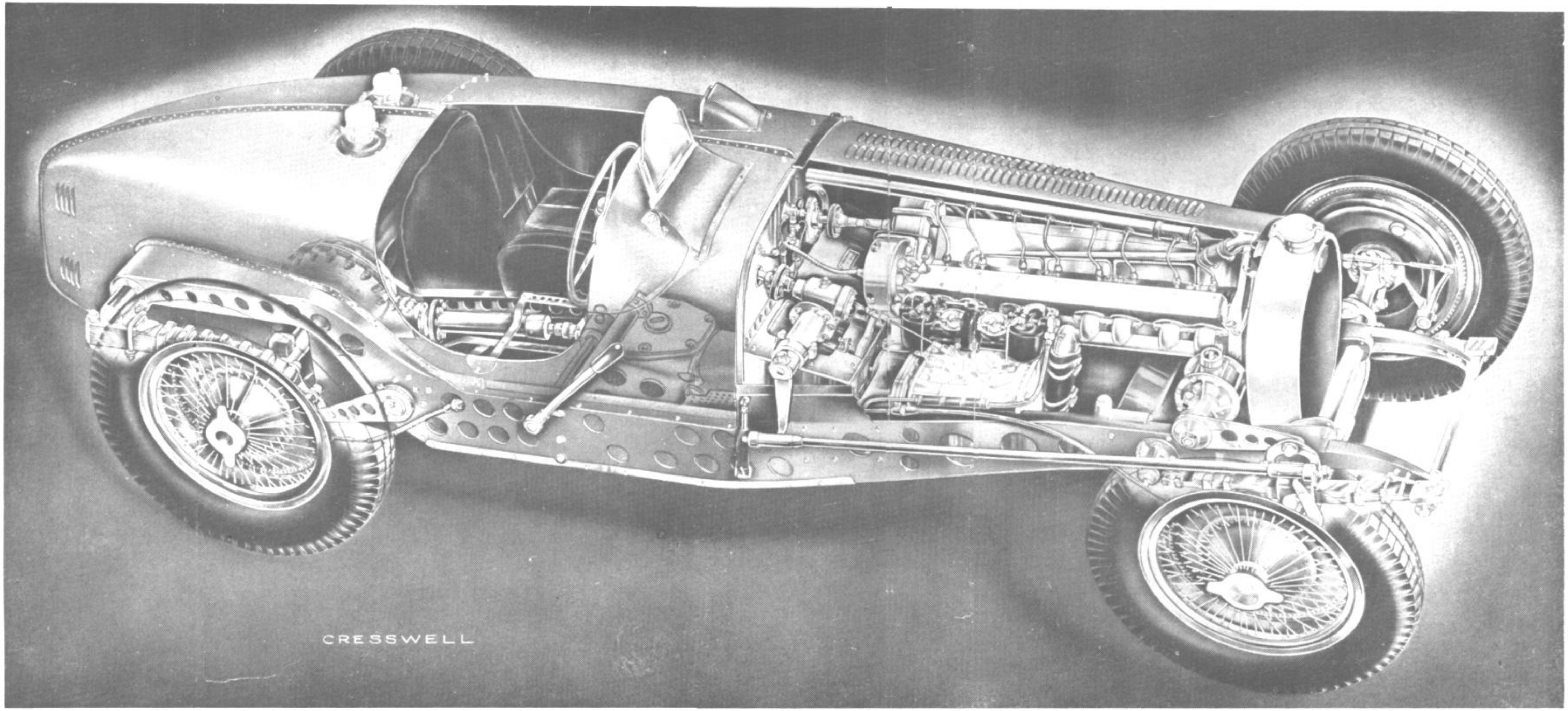

LINEAR DEVELOPMENT, 2: The new 750 kg. formula of 1934 saw the introduction of wholly novel designs by Auto Union and Mercedes-Benz, but in that year they had no great margin of superiority over the fully-developed classic type as exemplified by the Type 59 Bugatti. As shown here, this car was a refined and developed version of the typical 1914 model, and was similar thereto in many respects with semi-elliptic front springs passing through the front axle, reverse cantilever rear springs and small frictional dampers, hydraulically controlled. The live bevel rear axle was located by a torque arm and, as before, one of the double overhead camshafts was used to drive a scuttle-mounted magneto. With a 3.3-litre supercharged engine developing about twice as much power as the 1914 model, the 1934 type was about 33 per cent faster on Grand Prix circuits.

This in turn, properly interpreted, gives us basic performance figures for :

(f) Acceleration.
(g) Maximum speed.

Because Grand Prix racing has been run on roads and tracks which, of intention, have departed from geometric accuracy, it is impossible to estimate the true development of the racing car without considering certain other qualities which have no precise quantitative value. In detail these may be termed :

(h) Brakes.
(i) Steering.
(j) Suspension.
(k) Frame design.

In sum these make up the factor of *Roadworthiness.*

Taking the whole of the foregoing together we can estimate the gains in average road speed of the Grand Prix cars, and we can check these estimates against relative performance of the whole range of successful designs on the road. It thus becomes possible to set up relative average indices for a circuit which can be interpreted in terms of the start allowance which a 1939 Grand Prix car would give to all its predecessors over the normal distance of a Grand Prix race (500 kilometres).

The figures for all the items *(a)* to *(e)* inclusive are to be found on various pages of this book and in the appendices thereof, but to simplify the study some graphs have been drawn based on typical Grand Prix cars as follows :

Index No.	*Car*
100	1906 Renault
104	1907 Fiat
108	1908 Mercedes
111	1912 Peugeot
117	1914 Mercedes
121	1921 Ballot
129	1923 Fiat
134	1925 Delage
137	1926 Talbot
139	1928 Bugatti
142	1929 Maserati
146	1932 Alfa Romeo
151	1934 Auto Union
150	1934-5 Mercedes-Benz
156	1936 Auto Union
157	1937 Mercedes-Benz
164	1939 Mercedes-Benz

The index numbers have reference to appendix C and it should be noted that as the design of number 150 was continued throughout 1935, 151 and 150 are deliberately inverted. Taking first the, so to speak, counteracting items of weight and windage, it will be seen that for both of these items there was in general a fairly marked drop from 1906-26 and a slight tendency to rise thereafter, so that both the laden weight and the frontal area at the end point of 1939 were slightly greater than they were in 1921. In detail there was a very big change as between 1906 and 1914, during which

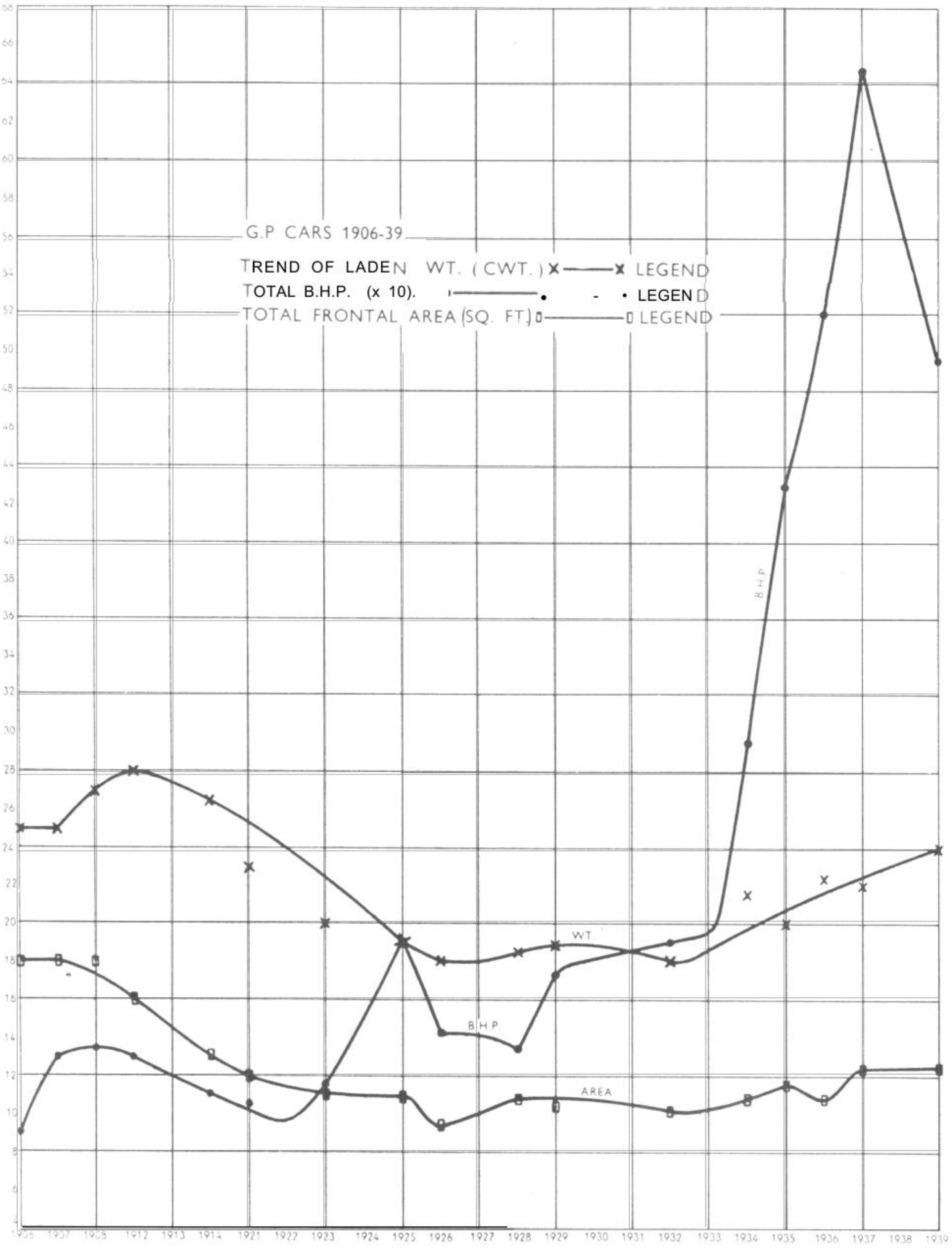
G.P CARS 1906-39
TREND OF LADEN WT. (CWT.) ×——× LEGEND
TOTAL B.H.P. (x 10). ●——● LEGEND
TOTAL FRONTAL AREA (SQ. FT.) ▯——▯ LEGEND
68
66
64
62
60
58
56
54
52
50
48
46
44
42
40
38
36
34
32
30
28
26
24
22
20
18
16
14
12
10
8
6
4
B.H.P.
WT.
B.H.P.
AREA
1906
1907
1908
1912
1913
1914
1921
1922
1923
1924
1925
1926
1927
1928
1929
1930
1931
1932
1933
1934
1935
1936
1937
1938
1939

period frontal area was reduced by nearly one-third consequent upon detail changes. Frontal area actually reached a minimum with the 1926-7 cars and thereafter increased by approximately one-third, a change occasioned by the use of larger engines and also by the belief that greater area was worthwhile if accompanied by a lower drag coefficient, although this is known to be true only with the 1939 cars.

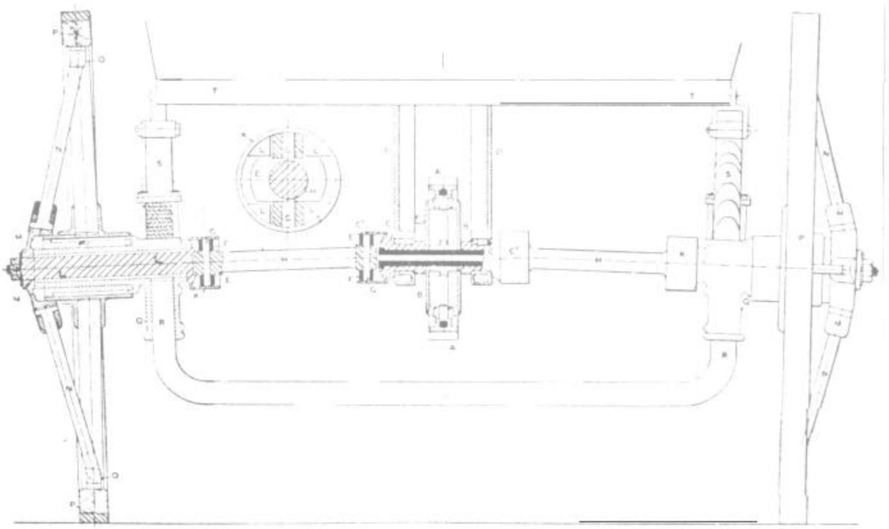

This drawing is a facsimile from the 1894 patent application made by Count de Dion and shows his arrangement of a dead axle beam with separate exposed half-shafts, each having two pot-type universal joints. The ends of each half-shaft pass through the hubs and connect with spokes engaging with the periphery of the wheel. The spokes of the wheel proper were thus relieved from driving stresses.

But (with the admitted exception of the 1939 Mercedes-Benz) the cost in h.p. of moving 1 sq. ft. of frontal area through the air has remained sensibly constant during the whole history of Grand Prix racing, despite the apparent refinement in the hull form and far greater enclosure of the crew. The explanation for this apparent paradox lies in the fact that coincident with improved body shape the drag set up by wheels and tyres of increasingly large section has grown until, on the 1939 cars, the drag of the parts attached to the hull made up over 90 per cent of the total resistance to be overcome.

The shape of the curve for laden weight is decidedly similar to that of frontal area ; and there is a steady drop from the heaviest figure realised in 1912 to the remarkably light weight of a number of vehicles built between 1926 and 1933. Subsequently unladen weights remain static, but laden weight rose by some 50 per cent by reason of a steady deterioration in fuel consumption and consequent great increase in percentage of total load accounted for by the fuel. This latter figure reached a peak in 1939 with cars carrying 88 gallons of alcohol which scaled over 600 lb. or nearly one-quarter of the all-up weight.

As a general statement we may, therefore, say that the resistance factors of windage and weight reached their lowest level in the quinquennium 1926-31 and thereafter showed a steady tendency to rise, but such increases in weight and windage were considerably more than balanced by the tremendous upswing of the b.h.p. curve, particularly after the introduction of the 750 kg. formula in 1934. The curve for total h.p. available is a regular one, an early peak being reached in 1908-12, followed by a steady decline up to 1922 and then further rapid rise to a pronounced peak in 1925,

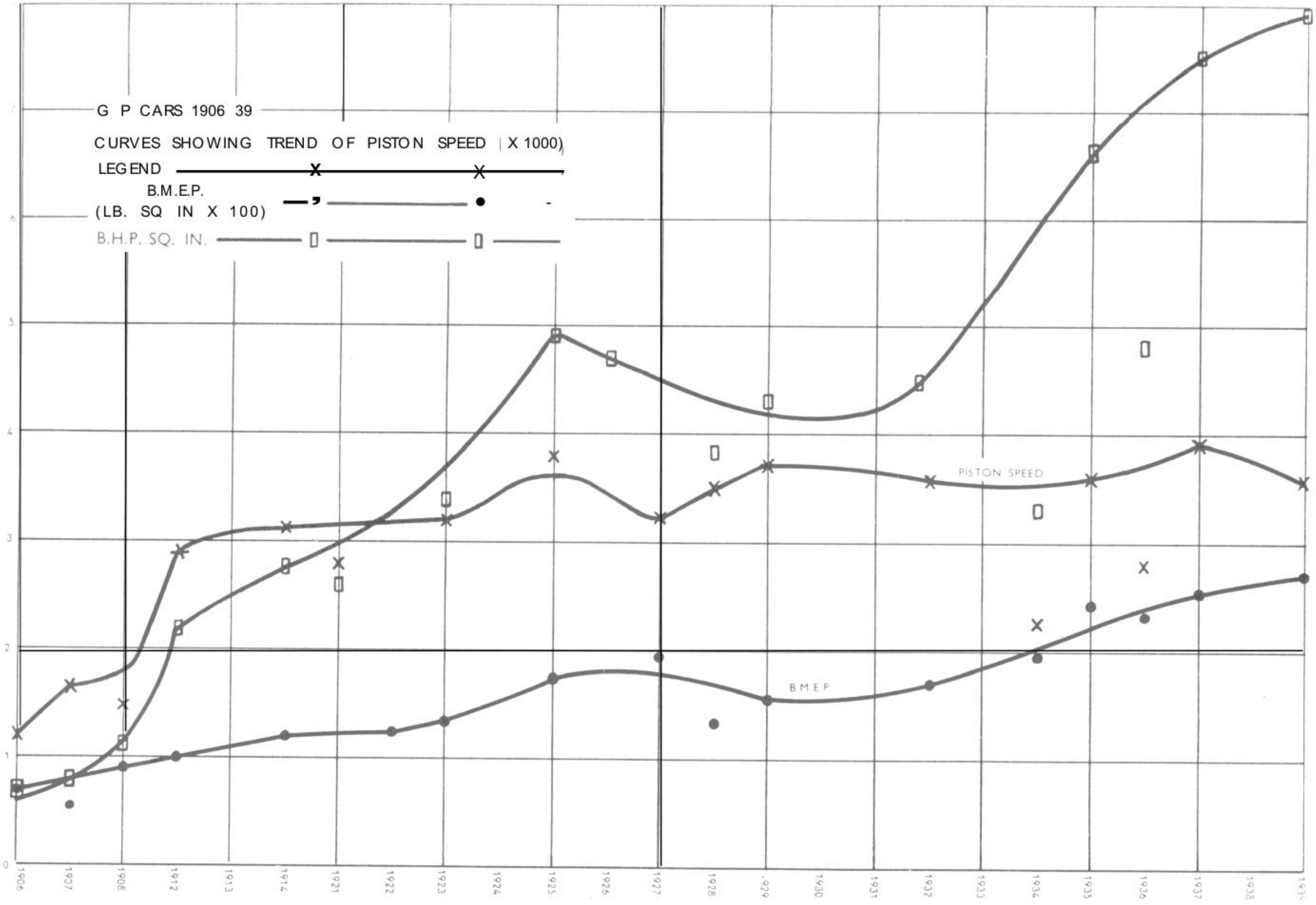
G P CARS 1906 39
CURVES SHOWING TREND OF PISTON SPEED (X 1000)
LEGEND ×
B.M.E.P. (LB. SQ IN X 100) ●
B.H.P. SQ. IN. ▯
PISTON SPEED
B M E P
0
1
2
3
4
5
6
7
1906
1907
1908
1912
1913
1914
1921
1922
1923
1924
1925
1926
1927
1928
1929
1930
1931
1932
1933
1934
1935
1936
1937
1938

a year of highly efficient, roller bearing, supercharged engines of 2-litre capacity. A reduction of engine capacity by regulation in the ensuing two years reduced the power output and as subsequent power units were built for sale to amateurs it was not until 1932-3 that successful road-racing cars were built with greater power than was possessed by the 1925 models.

Looking back to 1908 from the year 1933 there had been a gain in power of only 50 per cent, but before the end of 1934 an increment of similar proportion was recorded, and by 1937 the 1934 figure had itself been doubled. This enormous change may perhaps be more vividly presented by saying that if the front five cylinders on the 1937, eight-cylinder, Mercedes-Benz had ceased to work, the back three alone could have produced more power than any successful road-racing engine built up to 1933.

It is of interest to turn aside for a moment to consider how this great growth in power was affected.

It has been shown earlier, that a fundamental unit of engine design is horsepower per sq. in. of piston area, and that the total power depends upon this figure multiplied by the sq. in. available.

Horsepower per sq. in. is compounded of b.m.e.p. and piston speed, and for this reason a set of three curves has been prepared dealing with these factors. The lowest curve (recording b.m.e.p. figures) shows that these rose during the period under review from 70 lb. to 270 lb. per sq. in., a four-fold gain, in an almost straight line, although the supercharged roller bearing engines of 1923-7 were slightly above the mean line and the power units of 1928-35 slightly below it.

The curve for piston speed shows substantially different characteristics. In the first four Grand Prix years piston speed was doubled and by the mid-twenties the twelve-cylinder Delage engine ran at 3,700 ft./min., a figure barely exceeded in any subsequent year ; in fact, as late as 1934 the multi-cylindered, short stroke, Auto Union Grand Prix engine had a substantially lower piston speed than the 1912 Peugeot.

The curve for b.h.p. per sq. in. is drawn independently through the mean of definite plottings and given points on it may not, therefore, exactly correspond with the products of b.m.e.p. and piston speed curves immediately beneath. There is an almost straight line rise from less than one horsepower per sq. in. in 1906 to nearly 5 h.p. per sq. in. in 1925. The curve then becomes concave ; 5 h.p. per sq. in. is not exceeded for nearly ten years, after which there is a rapid, almost straight line, increment to just under 8 h.p. per sq. in. reached in 1939. It will, however, be noted that there are marked deviations from plot points in both 1934 and 1936 owing to the fact that the Auto Union cars chosen as examples for these two years combined an unusually large piston area with comparatively low piston speed and b.m.e.p.

We may now return to the study of total h.p. available as influenced by engine size. It is usual to consider an engine dimensionally in relation to the swept volume of the cylinders which was limited by regulation to 4½ litres in 1914, 3 litres in 1921, 2 litres in 1922-5, 1½ litres in 1926-7, and, in effect, 3 litres for 1938-9.

Although 1914 was the first year that capacity regulations were in force there was, nevertheless, a voluntary reduction of capacity to the extent that the swept volume of the 1912 Peugeot was under half that of the 1907 winning car. Moreover, despite the absence after 1927 of any limit on cylinder dimensions, capacity rose from the all-time low of 1½ litres to only 3 litres in 1933, whereas the latter figure was doubled with the construction of the sixteen-cylinder C type Auto Unions in 1936 and the W125 Mercedes-Benz in 1937.

Change in piston area has been greater than variation in capacity. The fact that the two curves lie almost side by side from 1906 to 1914 is a reflex of a change in stroke : bore ratio from roughly 1 : 1 and up to *circa* 1.8 : 1, the marked divergence between them in 1925 is a corollary of the twelve-cylinder engine used by the Delage chosen as the example for this year. But the disproportionate increase in piston area in relation to capacity from 1933 onwards (and particularly in the two years 1937-9) follows upon a reversion in stroke : bore ratios to the theories held thirty years previously.

It will thus be seen that the exceptional gain in power in the 1934-7 period was derived from increments in all three basic elements of engine design ; piston area, b.m.e.p. and piston speed. The magnitude was in this order.

Having thus set out the gain in power and explained how it was obtained it is now appropriate to refer to the changes in basic road performance factors, i.e. b.h.p. per laden ton and b.h.p. per sq. ft. of frontal area.

The b.h.p./ton curve shows a quick gain in the first year and the figures recorded in 1907-8 are the highest achieved until 1922 after which designers began to extract considerably more power from engines of substantially constant weight by supercharging and enlarged piston area. After a brief decline the curve rises so that the 1908 figure is doubled by 1932, and then it takes only three years for it to be redoubled, and a further two to reach a peak which, for the Mercedes-Benz of 1937, was six times greater than the 1908 winner from the same works. As suggested by the preceding curves the figures for 1938-9 show a marked drop.

STANDING KILOMETRE SPEEDS, 1906-39

1906	16.7-litre Itala	52.4	m.p.h.	26/6/06	G.P. Circuit
1908	12-litre Mercedes	67.7	„	17/10/09	Tervueren
1919	4.9-litre Ballot	65.14	„	26/10/25	A.I. No. 7
I92	3-litre Vauxhall	69.75	„	6/10/25,	AI. No. 7
1925	2-litre Delage	79.39	„	11/10/25	A.I. No. 7
1926	2.3-litre Bugatti 35B	71.56	„	26/4/27,	3R
1926	1.5-litre Talbot	81.55	„	5/9/26,	AI. No. 10
1929	2-litre Bugatti 35C	80.44	„	19/5/30	R.A.C.4
1932	2-litre Bugatti, Type 51	81.49	„	4/8/33	A.I. 211
1934	2.9-litre Maserati	88.87	„	23/3/34	A.I. 231
1934	4.95-litre Auto Union	101.56	„	20/10/34	A.I. 254
1937	6-litre Auto Union.	117.3	„	26/10/37	A.I. 304
1939	3-litre Mercedes-Benz	110.2	„	14/2/39,	A.I. 318

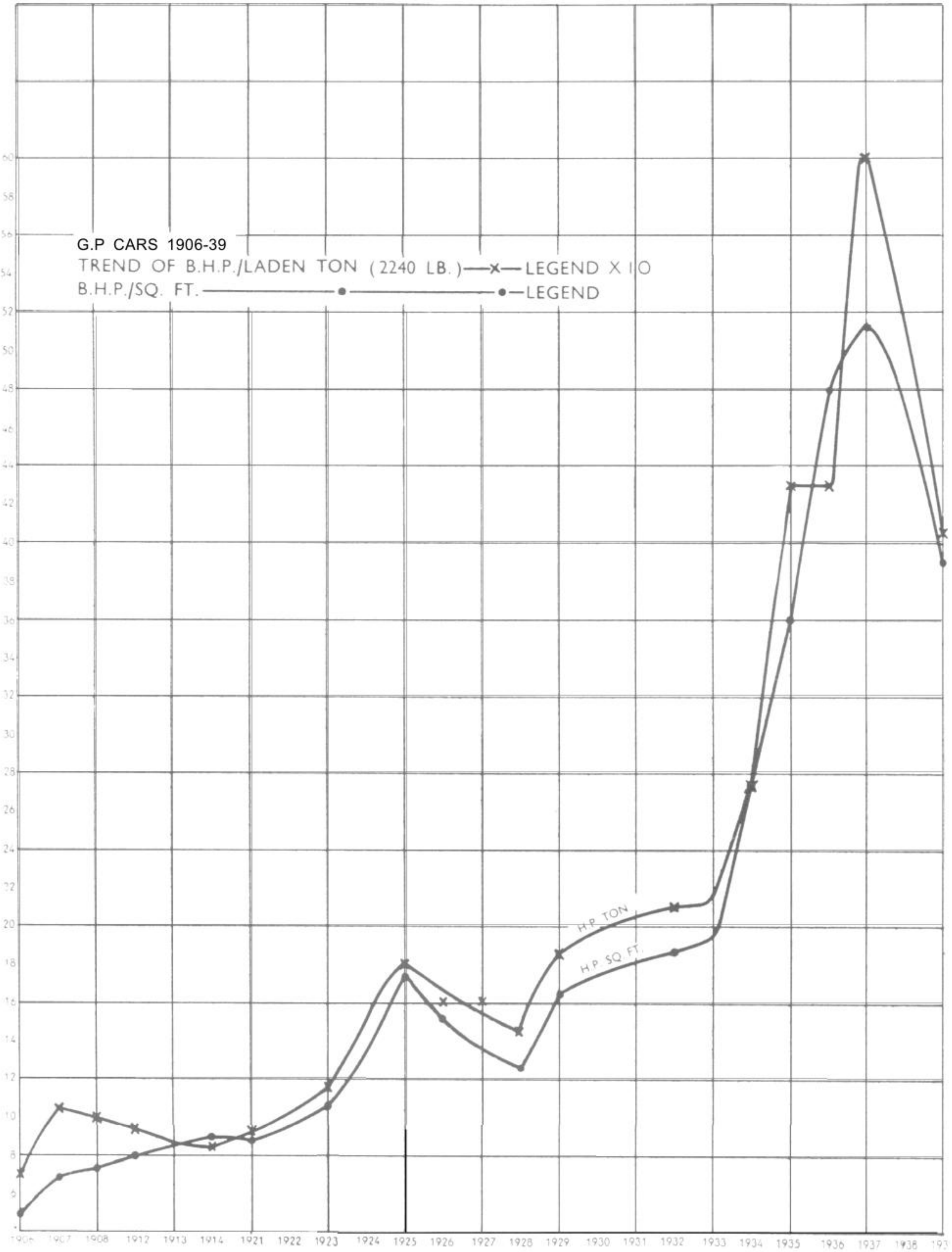
G.P CARS 1906-39
TREND OF B.H.P./LADEN TON (2240 LB.) —×— LEGEND X 10
B.H.P./SQ. FT. —●— LEGEND
H.P. TON
H.P. SQ. FT.
60
58
56
54
52
50
48
46
44
42
40
38
36
34
32
30
28
26
24
22
20
18
16
14
12
10
8
6
4
1906
1907
1908
1912
1913
1914
1921
1922
1923
1924
1925
1926
1927
1928
1929
1930
1931
1932
1933
1934
1935
1936
1937
1938
193

We have previously seen how the curves for weight, and frontal area follow closely together, and it follows that the h.p. per sq. ft. curve must also lie close to the h.p./ton curve. In the early days of racing the rate of improvement under this head was rather greater than it was for the power : weight ratio, but generally speaking what applies to one applies also to the other.

It is, unfortunately, not possible to relate the h.p./ton curve with exact figures for acceleration, but some idea of the overall changes in acceleration times can be derived from a study of the speeds put up by Grand Prix cars during various record-breaking performances. These are set out in a table on a preceding page.

In laying out the ordinates for the maximum speed curve we have exact measurements of time and distance for the 1906 Renault, 1908 Mercedes, 1912 Peugeot, 1920 Ballot, 1925 Delage, 1926 Talbot, 1928 Bugatti, 1935-6 Auto Union, and the Mercedes-Benz cars of 1937, ‘38 and ‘39. The figures for the 1907 Fiat, 1914 Mercedes, 1923 Fiat, 1929 Maserati, 1932 Alfa Romeo and the Mercedes-Benz and Auto Union of 1934-5 can be estimated with a reasonable degree of accuracy.

If we assume that the drag factor for all Grand Prix cars has remained constant (at about Cw = 0.6) then maximum speed should vary as the cube root of the hp./sq. ft. The gap between theory and practice is small. The biggest discrepancy (some 8 per cent) is in 1939, in which year the engineers, both of Mercedes-Benz (the selected example) and Auto Union (which had a comparable power factor and maximum speed) were impelled towards a serious study of the drag problem following upon a forced diminution of engine capacity and horsepower. One is less astonished by this exception to the general rule than by the extraordinarily close conformity of all the other vehicles to the cube root law. That vehicles of such widely varying frontal aspect and general body lines as the 1906 Renault and 1912 Peugeot, to take two early examples, and the 1923 Fiat and 1926 Talbot, as representatives of the middle '20's, and the 1932 Alfa Romeo should, as proved by their obedience to the cube law within 2 per cent, have had the same drag coefficient within 6 per cent is almost unbelievable.

From 1934 to 1937 there are more marked divergences between the two curves, but in these years potential maximum speed had risen so much that it was worth sacrificing time gained by travelling as fast as possible in return for improved acceleration. For example, on no circuit would it be possible to travel for more than two miles in all at maximum speed, taking 40 seconds at 180 m.p.h. An average 200 m.p.h. over two miles would save only 4 secs. and better acceleration obtained by lower gearing could easily offset so small a time saving.

It is the specific characteristic of the road-racing car that lap speed is the criterion by which it is judged and although, as we shall see later, there is statistically a close connection between this and maximum speed, the link is through the common factor of engine power and the relationship may be disturbed by any or all of the factors set out under the headings *(h)* to *(k)*, which have been summarised as “ roadworthiness.” In particular, braking power may be considered as equal to engine power in its effect on averages over difficult circuits.

Some drivers, notably Nuvolari, have developed an intentionally forced skid prior to a corner for the double effect of slowing the car and of placing it at the correct angle for a straightline departure down the ensuing section of the road. But it has been estimated that with normal driving the brakes are used upon 30 per cent of a road-racing course and, of course, the energy to be dissipated rose very much with

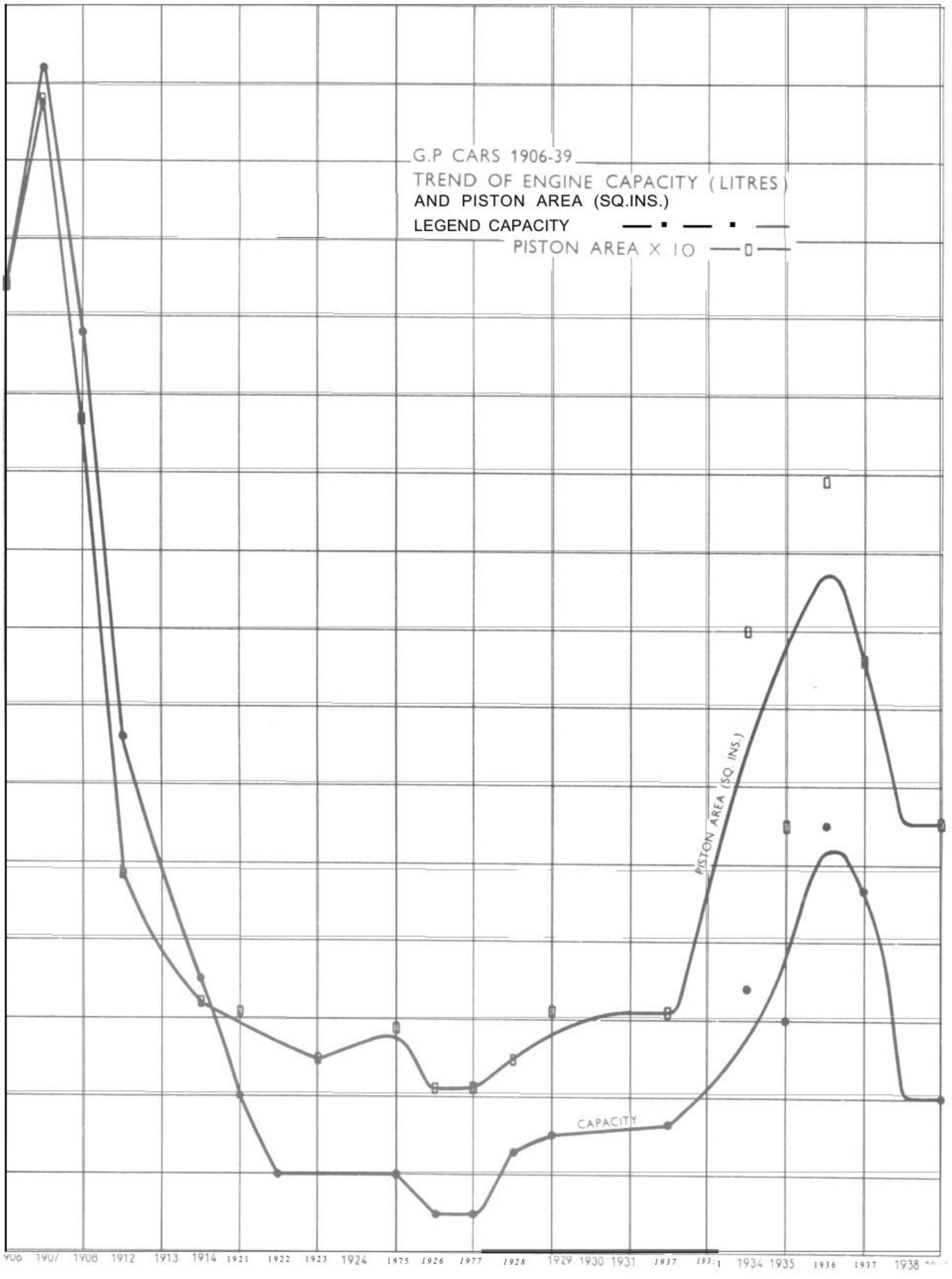
G.P CARS 1906-39
TREND OF ENGINE CAPACITY (LITRES)
AND PISTON AREA (SQ.INS.)
LEGEND CAPACITY
PISTON AREA X 10
PISTON AREA (SQ. INS.)
CAPACITY
906
1907
1908
1912
1913
1914
1921
1922
1923
1924
1975
1926
1977
1928
1929
1930
1931
1937
193:1
1934
1935
1936
1937
1938

increased maximum speeds, for the inertia of the car varies as the square of the speed. Hence as much energy is dissipated in reducing speed from 180 m.p.h. to 148 m.p.h. as is in lowering the speed from 110 m.p.h. to 45 m.p.h. Wheel diameter imposes a ceiling on the available brake drum area through which this energy may be dissipated in the form of heat.

It would seem impossible to build conventional brakes with an internal surface area of more than 600 sq. in., but on the pre-1914 Grand Prix cars the brake area was high in relation to weight as there were three drums, two on each wheel and one placed behind the gearbox operating through the transmission. All three, however, were connected to the rear wheels only, and thus under the most favourable conditions of brake distribution and friction coefficient the maximum rate of retardation could not exceed 0.5 g. It is doubtful if more than 0.2 g. was realised when braking from high speeds, although it was part of the established technique of the time to lock the rear wheels just before entering a sharp corner at moderate speeds, thereby provoking a skid which assisted the car round the bend.

The introduction of brakes on all four wheels to the road-racing cars of 1914 raised the theoretical rate of retardation to 1.0 g., but it is improbable that the maximum on the road was more than 0.3 g., and although no detail statistics have ever been published on braking rates used in races, it seems unlikely that 0.4 g. has been exceeded except in emergencies.

Front wheel brakes led to a speed gain of the order of 5 per cent for a given lap, but the improvement in overall average speeds from the start to the finish of a race has probably been a good deal higher and most of the development from 1914-39 has been towards improving the long-term effectiveness of the braking system rather than in the search for the shortest possible stopping distance.

The lines of work have been towards maximum retardation for a given pedal pressure, firstly by relatively complicated servo mechanisms and latterly by the use of the Lockheed hydraulic system.

Improved brake linings (there was marked development between 1928-31 and 1937-9), the use of two or even four leading shoes within the drum and a steady increase in the diameter, width and stiffness of drums, have all been means whereby sustained braking power has matched increases in power and maximum speed, but we have no possibility of estimating the benefit of a 1939 braking system if it had been available to the designers of cars in previous decades. The study of racing car design does, however, show that between 1922 and 1934 the additional unsprung weight caused by brake drums attached to the ends of a rigid front axle caused serious embarrassment and led to a great increase in spring stiffness. In some cases (notably the P3 Alfa Romeo) radius arms were resorted to so as to maintain constant castor angle, but this did not affect the risk of front axle tramp at high speeds, a danger which, with orthodox systems, could only be suppressed by short, stiff, springs with heavy friction damping.

A study of moving pictures taken of the pre-1914 races shows that due to the low unsprung weight (characteristic of brakeless front axles and chain drive with dead rear axles) the cars were softly sprung, and, when travelling at low speeds over rough roads, as in the controlled passage through certain towns, responded with a low periodicity. Studies of this kind show also that the cars showed a marked tendency to run wide on the corners and such accidents as occurred were almost invariably the result of the driver's sheer inability to pull the car round the required radius, with the result that the car struck the outer bank or retaining wall. Between 1910 and 1914, however, drivers established the technique of imposing artificial oversteer upon fundamentally understeering vehicles. This they did by using the powerful transmission brakes of the time temporarily to lock the rear wheels, and this, in conjunction with the loose road surfaces characteristic of this period, made it possible literally to slide the car round a sharp corner.

The comparatively poor road surfaces, and the limited stopping power of the earlier racing cars made all-round roadworthiness a particularly important quality in the attainment of success. The very fast overhead camshaft Clement-Bayard Grand Prix cars of 1908 were, for example, handicapped by too high a centre of gravity which gave them a high roll angle, and an unpleasant, or even dangerous, wander at high speed on the straight. This last-named characteristic was also true of the 1906-8 Renault cars. These ran without a differential, and the drivers remarked that it was impossible to hold the cars on a straight course ; they simply demanded a long wave oscillation which had to be checked instantly it showed signs of taking the car off the road.

All the Henri-designed Peugeots and their derivatives, Sunbeam and Ballot, with their sub-frame-mounted engines and gearboxes, reflected in their behaviour on the road the inherent flexibility of the main frame and lack of torsional stiffness, qualities which made it necessary to " persuade " the cars round a corner as they whipped and weaved beneath the driver's hand. By contrast, the various Mercedes Grand Prix cars all showed a remarkable rigidity which made it possible for the driver to point the car exactly where he wished it to go. Within the laws of centrifugal force, it went precisely there.

Between 1921 and 1936 increasing unsprung weight arising from the use of front brakes, and the retention of beam axles and leaf springs made it necessary to reduce axle movement to an absolute minimum. One consequence of this was the obvious one of giving the driver or mechanic an extremely punishing ride ; the other was to produce basically oversteering cars which were maintained in a straight line only by constant correction on the steering wheels. These cars showed a natural trend towards rear wheel skids on bends and the drivers fixed the attitude of the car in a radius by the degree of counter-steering that was employed.

One of the earliest cars to exemplify this basic change in behaviour was the Indianapolis Sunbeam which showed a really vicious rear-end breakaway which alarmed, and with good reason, even highly experienced drivers.

From 1934 onwards the control of cars in this fashion became increasingly difficult for, with gross output rising from some 200 h.p. to over 400 h.p., the corresponding increase in surplus power made it all too easy to generate wheel spin which exaggerated the inherent oversteering characteristics.

Not until 1937 and thereafter was this steady growth of engine power put to good purpose. It was then combined with much softer suspension and with cars endowed with the old-fashioned basic understeer. For the first time, therefore, it became possible for drivers to control the position of the car on the road with a high degree of accuracy by using the technique of balancing the understeer by a controlled degree of wheel spin which tended to swing the rear end of the car slightly outwards. In other words, the technique of the four-wheel drift, which could be practised at moderate speeds on the 100 h.p. racing cars of 1906-14, became an established technique for the 450 h.p. cars of 1939 at speeds lying within the 120-160 m.p.h. band.

There was, further, a deterioration in overall frame stiffness, particularly in torsion, following upon the general adoption of unit construction for engine and gearbox in 1922. Four-point mounting of the crankcase on the early cars provided an immensely stiff bracing for the front section of the frame, whilst similar mounting for the centrally placed gearbox gave additional benefits. On some cars built in the late '20's, notably the 1½-litre Delage, the mounting of the combined engine and gearbox relieved these components from bending moments but, at the same time, eliminated almost all cross-bracing between the frame side-rails.

Bugatti stood alone in his appreciation of the benefits to be derived from stiff frames, and on his cars the sump formed a brace for the front end of the car, and the dash structure effectively tied together the centre section. Additionally, the side members were correctly proportioned as a beam. This led to the comparatively low power, low performance Type 35 Bugatti scoring against faster cars and to a considerable detail improvement by other manufacturers in the period 1929-32. No radical changes in racing car design can be discerned in this period, but the overall effectiveness of the vehicles was raised and lap speeds increased within a given framework of engine output, acceleration and maximum speed by about 6 per cent.

The introduction of independent suspension to all four wheels by Mercedes-Benz and Auto Union was a revolutionary change which made it possible usefully to extend engine output from the 200 b.h.p. which had proved the maximum which could advantageously be employed on the older type of car to 400 h.p. and more. By this bold stroke unsprung weight was lowered and the geometry of the steering improved, and, perhaps most important, the transverse torque effect on the rear wheels was eliminated.

In the initial stages, however, the range of independent wheel movement was not much greater than that provided on cars with rigid axles, and although box section and tubular frames were employed there is evidence that these were not really adequate in torsional stiffness. Additionally, the use by both parties of the swing axle system at the back substantially exaggerated existing oversteer tendencies. For all these reasons the potential benefits of independent suspension were not fully realised ; on the contrary, there is abundant statistical evidence that, power for power, the " classic " type of car remained the more roadworthy until 1935.

That this should be so was in accord with previous experience for although the theoretical benefits of independent suspension (and of the front wheels in particular) are unquestionable it is undeniable that earlier racing cars so equipped (e.g. the 1899 20 h.p. Bollée, the 1907-12 Sizaire Naudin, 1924 Sima Violet and 1925-7 Alvis, the two last with front drive) seemingly secured no great advantage over their beam axled contemporaries. In this matter the usage of Alfa Romeo with their decade of experience prior to 1934 is perhaps even more important than the practice of the German companies, both of whom started with clean sheets of paper and put theory directly into practice with no alternative practical experiments. The Italians, however, were converted to I.F.S. in mid-1935, and then to rear swing axle in late 1935. But it was the advent in 1937 of W.125 Mercedes-Benz which marked the biggest single advance in chassis design and roadworthiness in the whole history of Grand Prix racing. By using soft springs and large wheel movements at the front of the car and the de Dion axle system at the back, overall stability of ride, a torque-free drive system, and basic under-steer characteristics were combined and these qualities were enhanced on the 1938-9 3-litre cars by markedly lowering the centre of gravity, still further reducing the stiffness of the suspension, and by hydraulic in place of friction damping. Development on the Auto Union chassis followed along similar lines, but these cars must be considered exceptional by reason of their use of rear (or more accurately centred) engine mounting. This fact considerably complicates assessment of their technical merit.

From the viewpoint of engine power in relation to weight and frontal area, rear engine mounting has many advantages to offer but it has been suggested that rear-engined cars with a central grouping of masses have inferior handling characteristics due to lower polar moment of inertia, leading to very rapid changes of attitude on the road when the car is subjected to overriding external forces. The correctness of this view has been challenged and some figures have been set out comparing a rear-engined Auto Union car with a front-engined Mercedes-Benz using absolute units of comparison thus :

	AUTO UNION 6-litre	MERCEDES-BENZ W165
Weight (cwt.)	22.1	17.2
Inertia moment around front axle centre (lb.-ft.-secs.^{2})	3,050	1,485
Inertia radius (ft.)	5.93	4.67
Relation of inertia radius to wheelbase	0.68	0.621
Angular acceleration around front axle centre (Radians,kecs.z).	2.19	2.61
Inertia moment around centre of gravity (lb.-ft.-secs2)	815	505
Inertia radius (ft.)	3.04	2.72
Relation inertia radius to wheelbase	0.354	0.36
Angular acceleration around centre of gravity (Radians/secs.^{2})	13.64	15.28

An analysis on these lines does not, however, embrace every factor to be considered, for it ignores the relation between the driver and the car.

When driving a racing car the limits of adhesion on the driving wheels are frequently overstepped and the tail of the car develops an angular acceleration in relation to the nose. The driver not only perceives a change in attitude on the road with his eye, but also responds to, and weighs the magnitude of, the acceleration by physical impulses despatched from his seat to the brain. It is evident that if he sits in the centre of the car his sideways acceleration will be lowered and his physical reaction correspondingly reduced. Correct driving of a rear-engined car with a mid-point seating position demands, therefore, a driver of unusual sensitivity, and it is significant that only three people have been discovered who could drive such a car to the limit of its power.

For this reason the front-engined car is not likely to be displaced and, to summarise, there have been four major developments in the chassis design of this type. These were : the introduction of front-wheel brakes in 1914, a general improvement in brake linings and drums, coupled with detail refinements in chassis design in the period 1923-32 ; the introduction of independent suspension to Grand Prix racing in 1934 and, finally, the development of the softly sprung car with de Dion rear axle and low centre of gravity in 1938-9.

The two first examples put chassis design ahead of engine performance and thus by themselves added 5 per cent and 6 per cent respectively to lap speeds.

In the two more recent changes improved roadworthiness was not a profitable end in itself, but merely a means of keeping a balance with enormously enhanced engine power. Statistics show that for the first three racing seasons of the 750 kg. formula road holding and cornering power was not, in fact, equal to the engine power and maximum speeds obtainable, but this deficiency was corrected in the 3-litre cars of 1938 and 1939.

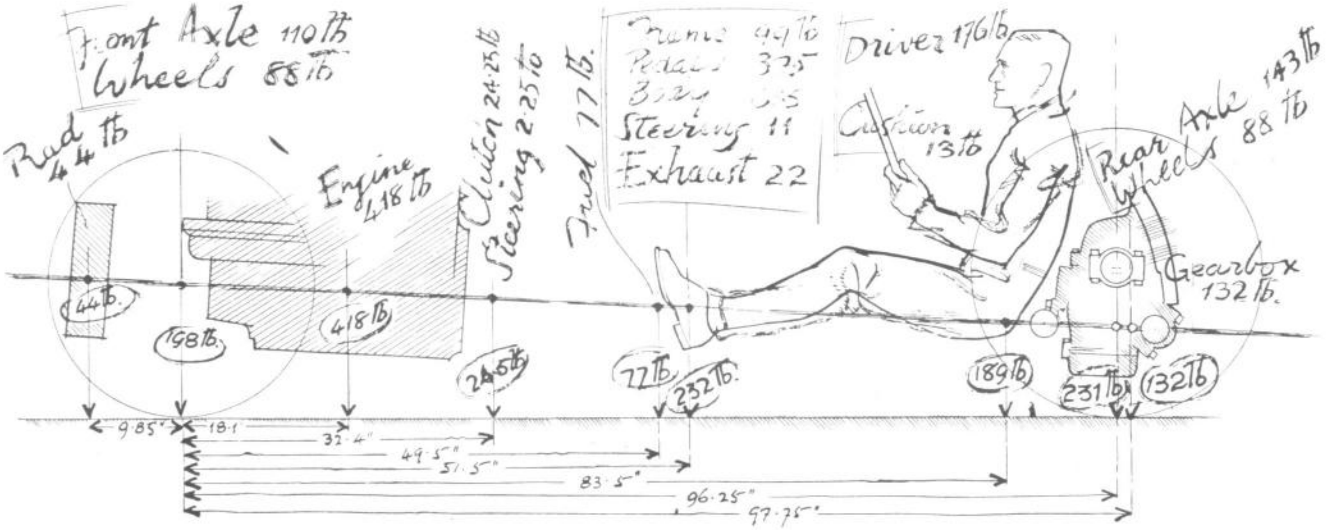

During the period 1937-9 the engineers responsible for Mercedes-Benz racing cars made every endeavour to dispose the weight of the car equally on the front and rear axles and to mass the weight at the front and back of the car so as to give the largest possible polar moment of inertia. This drawing shows the weight distribution on the I½-litre Type 165 model which was a scaled-down version of the 1939 Type 163 Grand Prix car.

We have now before us a broad picture of the main lines of racing car development over a period of more than thirty years, but it may be appropriate to make some brief reference to changes in the materials with which the cars were made.

The Grand Prix racing car has always been an-assembly of ferrous components, but whereas the pre-1912 cars were built mainly of cast-iron and mild steel, nickel-steel, under the influence of Peugeot, came to be used in the 1912-4 period and the use of forged steel barrels by Mercedes in 1914 was a powerful influence on future engine construction. Subsequent metallurgic developments were mainly along the lines of alloying, not only nickel, but also chrome, vanadium and molybdenum to provide forgings offering up to 100 tons tensile strength for shafts, connecting rods, etc., and thin wall tubes (which could readily be welded) for framework. Successive changes of piston material from cast-iron to steel and finally to light alloy were coupled with the rise in piston speed which has been presented graphically. As with steel, so with non-ferrous parts, improvement in physical qualities has been effected by the use of alloys, particularly copper or silicon, and great benefits were obtained in the maintenance of strength at elevated temperatures. In this respect special note should be taken of the development of austenitic steels for exhaust valves and also to the employment of hollow valve stems filled with sodium or mercury as a means of improving heat transfer from the head to the valve stem.

However, none of these modifications in the physical strength of the materials made any sensible difference to the moduli of elasticity thereof and one may legitimately conceive that a major change in the construction of the racing car has been the shift from strength to stiffness as a basis of design. Mention has already been made of this aspect in respect of torsional stiffness of the chassis but the development was no less active in the matter of the main structure. Gudgeon pin diameter can be taken as a typical example. The gudgeon pin of the 1913 Peugeot was 16 mm. (20.5 per cent of the bore diameter), but on the 1920-l Ballot designed by the same man the size was 20 mm. (i.e. had risen to 25 per cent) so that the beam stiffness increased by more than 50 per cent, without taking into account a 15 per cent reduction in length and an individual piston area diminished by 30 per cent. Similarly, the 1920 Ballot, 1932 Alfa Romeo and 1938 Auto Union cars had, within a limit of 5 per cent, the same cylinder diameters, but the crankpin dimensions were 42 mm., 52 mm., and 66 mm. respectively, a stiffness ratio of 1.0, 1.54 and 2.46 respectively.

In sum, one of the principal lessons learned by engineers was that mechanical failures were more often caused by distortion and local overloading than they were by stressing above the physical strength of the material used:

Developments in the consumables of tyres and fuel have been just as important as any change in the materials used for the structure of the car.

The first big change in tyre design occurred between 1908 and 1912 with the development of the cord in place of the fabric base, and whereas in the 1908 Grand Prix the winner stopped twelve times for tyres in 477 miles, in 1914 at Lyons the victorious car made only four wheel changes in 466 miles. Later there was constant development in design such as the supersession in 1925 of the beaded edge by the straight edge with wired-on method of securing the tyre to the rim, also by improvement of materials, and increases in section.

It was proved in 1937 that in conditions where a racing car tyre would survive 150 miles the normal touring car cover would run barely a twentieth of this distance, and despite almost incalculably higher stressing, tyre life was maintained at about 200 miles on the rear covers for the whole period of 1925-39.

A race for cars using alcohol fuel was organised as early as 1902 and it was consistently employed by Gobron Brillié in their racing and record-breaking cars, one of which was (in 1904) the first to exceed 100 m.p.h. with an internal combustion engine. But the specialised technique of high compression ratios and very rich mixtures

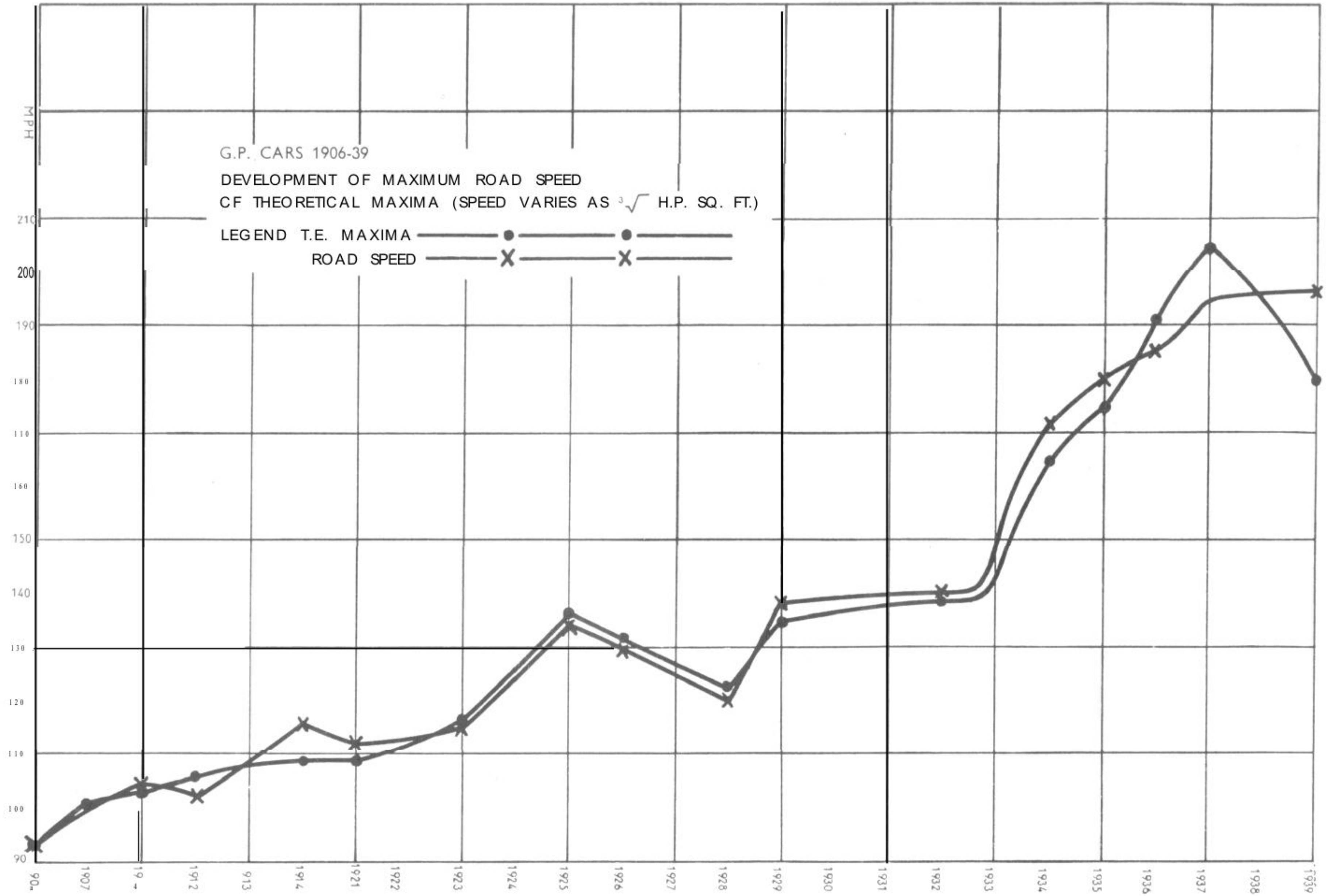

G.P. CARS 1906-39

DEVELOPMENT OF MAXIMUM ROAD SPEED

CF THEORETICAL MAXIMA (SPEED VARIES AS $\sqrt[3]{}$ H.P. SQ. FT.)

was a late development, and on all the early unsupercharged cars the limit of power was set not by thermal problems but by mechanical disabilities which alcohol was powerless to relieve.

Petrol of not more than 65-70 octane value was put in the tank of the Grand Prix cars built before 1921 with a corresponding limitation of compression ratio to at most 6.0 : 1. In the next ten years blends of approximately equal amounts of petrol, benzole and alcohol permitted up to 10 lb. boost on supercharged engines without reduction in compression ratio. The general use of fuels with low alcohol content persisted on low boost, and, for example, all the eight-cylinder Mercedes-Benz engines were tested (but not raced) on petrol-benzole mixture and Alfa Romeo won the 1934 A.V.U.S. race using leaded petrol and benzole.

The design of engines with very high boost pressure and specific outputs for the years 1938 and 1939 made it impossible to continue with this type of fuel which gave way to the use of almost pure alcohol with the addition of small percentages of acetone, ether, etc., to give easy starting. The high alcohol content was required not merely to inhibit detonation, but also to act as an internal coolant in which respect a very high latent heat of vaporization and an ability to burn with a very low air ratio was invaluable.

Specialised components such as superchargers, magnetos, dampers, carburetters and sparking plugs occupy a mid-position between raw materials and the completed car, and the vehicle as an ensemble has owed much to companies specialising in the manufacture of such parts. But with the possible exception of the change from friction damping to hydraulic shock absorbers the fundaments of design were established in the first decade of Grand Prix racing, and progress has in components, also, been strictly a matter of *ad hoc* development.

Having thus given a brief summary of the changes made in the vehicle it is now appropriate to consider the effect of these continuous modifications as reflected in road performance. It is shown in the third section of this book that it is possible so to compare performance of cars over known circuits as to build up a reasonably accurate picture of relative lap speeds over the past fifty years. This process gives ground for the belief that, for a given type of car, lap speed varies as the sixth root of the h.p. per sq. ft., that is to say as the square root of the potential maximum speed. It is, therefore, possible to present two curves, one showing the anticipated relations for lap speed between the various cars which have been taken as examples and the other the actual measured performance as recorded in events.

As previously mentioned, development in braking and chassis design produced gains of 5 per cent and 6 per cent respectively in 1914 and *circa* 1928, and the theoretical curve has been adjusted to take this into account.

The coincidence of the theoretical and realised average speed curves is even more remarkable than the close approximation, already demonstrated, between the maximum speeds theoretically to be expected and actually obtained. The facts about maxima reflect a Natural Law whereas the sixth root relation between h.p./sq. ft. and average speed index is purely empiric. That it holds good for so many cars over so long a period of time is, however, the best proof that it is a useful tool for the engineer engaged in predicting potential circuit speeds.

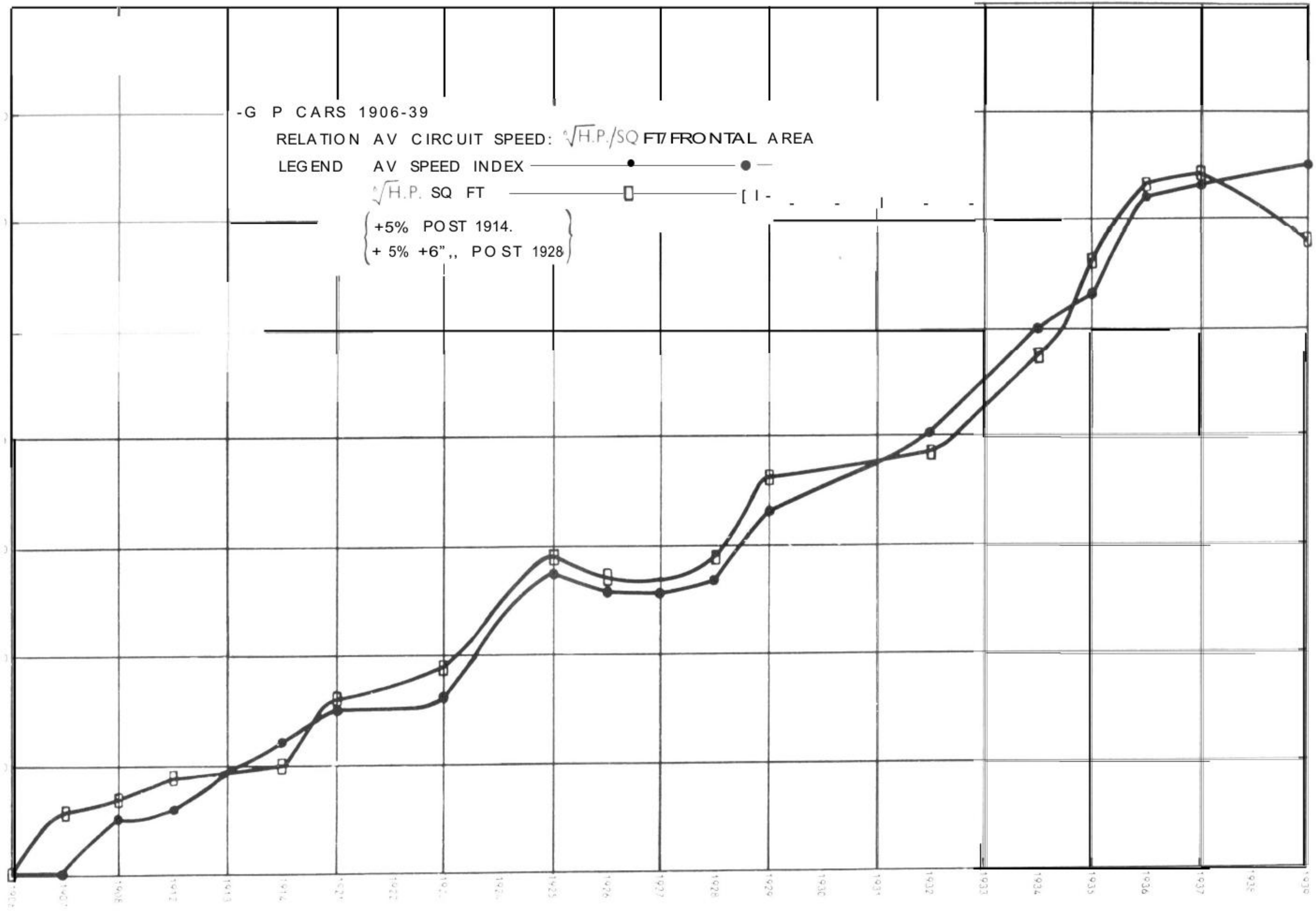-G P CARS 1906-39
RELATION AV CIRCUIT SPEED: $\sqrt[n]{H.P./SQ\ FT}$ FT/ FRONTAL AREA
LEGEND AV SPEED INDEX
$\sqrt[n]{H.P.}$ SQ FT
+5% POST 1914.
+ 5% +6",, POST 1928
1907
1908
1912
1913
1914
1921
1922
1925
1926
1927
1928
1929
1930
1931
1932
1933
1934
1935
1936
1937
1938
1939

The character of both curves follows the by now familiar pattern, that is to say, there is a quick upward movement between 1906 and 1914, and then little or no improvement until 1923, when the supercharged Fiat predicts a pronounced change. In the next ten years the curve takes the form of an almost straight line with an average annual increment of just under 2 per cent per annum. In 1934-5, the first two years of the 750 kg. formula, this rate was nearly trebled, and the progress during the five racing seasons which formed the life of the formula was virtually equal to that which has been seen in the previous ten years, although from the very nature of a sixth root curve a point of diminishing returns had obviously been reached.

The 1939 3-litre cars reached the highest performance index of their time, but expressed merely in terms of units the rise in average speed of 65 per cent as between 1906 and 1939 may appear as no outstanding achievement. The order of progress may be better appreciated if translated into a handicap allowance over, say, the Rheims circuit used for the 1939 Grand Prix. On this occasion the Type W163 3-litre Mercedes-Benz, driven by Lang, lapped the course at 117.5 m.p.h., and on this basis we might reasonably expect a single lap speed for the other cars and models which have been prominent in Grand Prix racing to be as shown in a succeeding table.

Whether it would be fair to assess a handicap in terms of lap speeds is a debatable point inasmuch as the older cars running on the equipment of the time would obviously lose a great deal of time in changing tyres. On the other hand, the latest types would find it difficult to put up an overall race speed which would compare closely with that achieved for the lap.

In the 1906 Grand Prix the overall average speed at the end of the first day was 8 per cent less than the record lap, but on the Rheims circuit in 1939 the difference was 10.2 per cent. In this respect the cars of the early '30's undoubtedly showed the great advantage, and in 1931, for example, Dreyfus lapped the Rheims circuit at 91 m.p.h. and finished the race at only 2½ per cent less than this. One may, therefore, predict that on the handicap proposed either Bugatti or the P3 Alfa Romeo would probably finish first.

A study of the individual allowances proves the very big difference made to the performance following the introduction of supercharging in 1923. The blown 2-litre Fiat car of that year gives away only 24 mins. to the 1921, 3-litre, Ballot, but receives over 20 mins. from the 1925 2-litre Delage, in which two years' experience of supercharging was combined with a twelve-cylinder power unit.

Later progress can be seen if we take as our pivot point the 1932 P3 Alfa Romeo Monoposto. We observe it can give the 1928 Type 35 Bugatti 94 mins. start, but it is in receipt of 12 mins. 30 secs. from a 1934 Auto Union. Incidentally the " theoretical " Rheims lap speed of the Alfa Romeo is 99.8 m.p.h. and the speed actually achieved in 1932 was 99.5 m.p.h. The actual speed put up at Rheims by the types 35B and 51 Bugatti in 1928 and 1931 were 91.4 and 92.78 m.p.h. which compare with 90.2 m.p.h. and 94.6 m.p.h. predicted, so that in three cases where the worth of the average index can be checked directly against recorded performance we find it to be accurate within 2 per cent.

It may clarify the detail development of average speed indices if the Py factor for the more important cars quoted throughout the text of this book are set out in tabular form as follows :

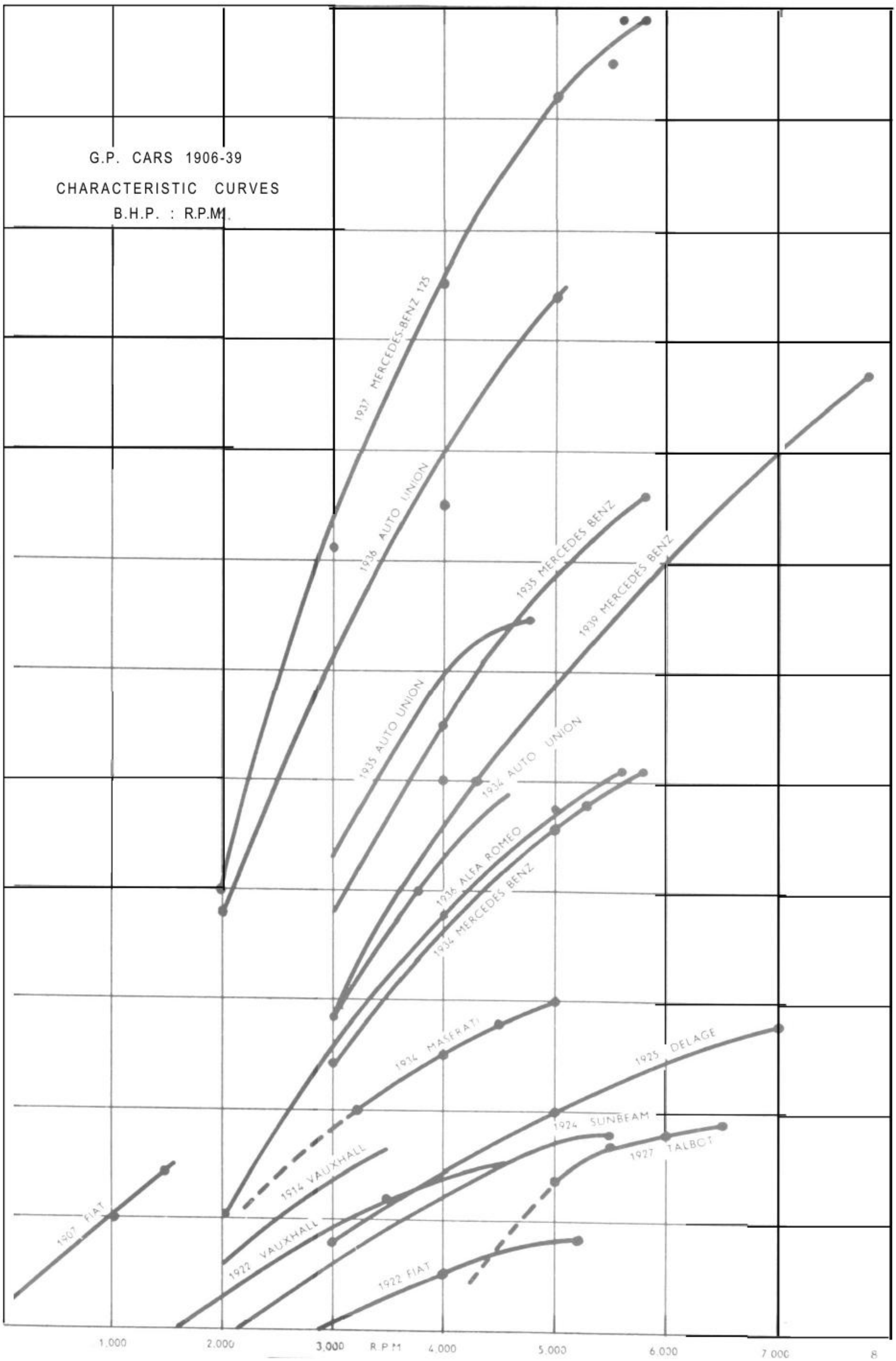

G.P. CARS 1906-39

CHARACTERISTIC CURVES

B.H.P. : R.P.M.

Py FACTOR OF PRINCIPAL ROAD PRE-1939 RACING CARS

FIRST DECADE

Renault	100	1906
Richard-Brasier	101.4	
Renault	100	1907
Fiat	102	
Mercedes	105.5	1908
Fiat	105.5	
Peugeot	107.5	1912
Fiat	108	
Peugeot	109	1913
Delage	110	
Mercedes	112	1914
Peugeot	110.5	

SECOND DECADE

Ballot	118.5	1919
Ballot	115	1921
Duesenberg	116	
Fiat	117	
Fiat,	111	1922
Sunbeam	114	1923
Fiat	116	
Alfa Romeo	120	1924
Sunbeam	121	
Delage	127.5	1925
Alfa Romeo	127	
Bugatti	115.5	1926
Delage	129.2	1927
Talbot	125.5	

THIRD DECADE

Bugatti	127	1928 and 1929
Maserati	133	1930
Alfa Romeo	130	
Maserati	135.5	1931
Alfa Romeo	132.5	
Bugatti	132.5	
Alfa Romeo	140	1932
Maserati	139.3	1933
Mercedes-Benz	150	1934
Auto Union	150	
Bugatti	144.5	
Alfa Romeo	143	
Mercedes-Benz	153	1935
Auto Union	153	
Alfa Romeo	149	
Auto Union	158	1936
Alfa Romeo	153	
Mercedes-Benz	163.4	1937
Auto Union	162	
Alfa Romeo	155	
Mercedes-Benz	160	1938
Mercedes-Benz	165	1939
Auto Union	162.5	

It will have been observed that in this chapter only ten makes are quoted to exemplify the development of the racing car over thirty-three years, with three national colours-France, Germany and Italy. Although both the United Kingdom and the U.S.A. can each claim to have won a Grand Prix, serious road racing has been almost solely confined to cars made in these three countries, and the regulations for the 1906 Automobile Club de France Grand Prix were, in fact, specially worded so that the existing supremacy of French cars (at that time made in larger quantities than those of any other nation) might be continued.

Of the first six Grands Prix only three were in fact won by French vehicles, Germany securing two wins and Italy one, but of the 28 major races held on both sides of the Atlantic in the ten years 1906-16, the national score was France 16, Italy 6, Germany 5. The French could, therefore, legitimately claim supremacy during this period.

During the ten years' racing between 1921 and 1930 German cars were largely prevented from competition (firstly by international and later by national regulations), and of the 59 races listed in this book representing Grand Prix racing in this period the position was France 28, Italy 21, Germany 6. In the three racing seasons between the end of 1930 and the re-entry of the German cars under the 750 kg. formula of 1934 the Italians were dominant with twenty-two wins in thirty-two events, but in the six years immediately preceding the outbreak of war, the German Mercedes-Benz and Auto Union cars met the Nelsonic ideal " Not Victory but Annihilation," by winning fifty-two of sixty-five listed races and 83.5 per cent of the events in which they entered more than one car.

HANDICAP (BASED ON FASTEST LAP) FOR GRAND PRIX CARS 1906-39 OVER 500 KILOMETRES ON RHEIMS CIRCUIT

Year	*Engine Size*	*Make*	*Fastest Practice Lap*	*Starting Allowance*
1939	3-litre	Mercedes-Benz	117.5 m.p.h.	Scratch
1937	5.66-litre	Mercedes-Benz	116.3 ,,	1 min. 30 sec.
1936	6-litre	Auto Union	115.4 ,,	3 min.
1935	3.99-litre	Mercedes-Benz	109 ,,	12 min. 30 sec.
1934	4.36-litre	Auto Union	106.7 ,,	16 min.
1932	2.65-litre	Alfa Romeo	99.8 ,,	28 min. 30 sec.
1929	2.5-litre	Maserati	94.8 ,,	38 min.
1931	2-litre	Bugatti	94.6 ,,	39 min.
1927	1.5-litre	Delage	92.7 ,,	42 min. 30 sec.
1925	2-litre	Delage	90.4 ,,	47 min. 30 sec.
1928	2.3-litre	Bugatti	90.2 ,,	48 min.
1926-7	1.5-litre	Talbot	89.4 ,,	50 min.
1924	2-litre	Sunbeam	86.2 ,,	58 min.
1923	2-litre	Fiat	83.6 ,,	1 hr. 4 min.
1920-1	3-litre	Ballot	81.8 ,,	1 hr. 9 min.
1914	4.5-litre	Mercedes	79.8 ,,	1 hr. 15 min.
1922	2-litre	Fiat	79.2 ,,	1 hr. 17 min.
1913	5.6-litre	Peugeot	78.2 ,,	1 hr. 19 min.
1912	7.6-litre	Peugeot	76.7 ,,	1 hr. 24 min.
1908	12.8-litre	Mercedes	75.4 ,,	1 hr. 28 min.
1907	15.3-litre	Fiat	72.6 ,,	1 hr. 38 min.
1906	13-litre	Renault	71.2 ,,	1 hr. 45 min.

The number of makes which have appeared in Grand Prix racing contrasts vividly with the small number of national colours which they have carried.

Seventeen factories supported the 1908 Grand Prix, but only three were engaged at Rheims in 1939, and as we read entry lists bearing witness to the departed glories of Panhard, Mors and Clement-Bayard, and later, to the half-forgotten feats of Sunbeam and Peugeot ; as we recall the scarce-remembered victories of Fiat, Delage and Talbot, and relive the bitter realisation that Bugatti could no longer enter cars offering the hope of victory, the words of Chief Justice Crewe spring to mind :

> " And yet Time hath his revolutions : there must be a period and an end to all temporal things-*finis rerum*. An end of names and whatever is terrene and why not of De Vere ? For where is Bohun ? Where is Mowbray? Where is Mortimer ? Nay which is more and most of all, where is Plantagenet ? They are entombed in the urns and sepulchres of mortality."

To turn to statistics, it is relevant to note that of the twelve makers who ran cars in the first Grand Prix, only two, Fiat and Mercedes, had teams in the 1914 event. When Grand Prix racing was revived in 1921 only one firm, " S.T.D." had had previous experience in 1914, and of the names which appeared over the pits in 1921 at Le Mans, not one could be seen on the race programmes printed ten years later.

Obviously for most makers competition in Grand Prix events has been a transient experience so that the exceptions are all the more deserving of recognition. Jointly and severally the components of the Sunbeam-Talbot-Darracq group competed sporadically from 1906-39, and Fiat almost continuously from 1906-25. Delage first entered Grand Prix racing in 1913 and retired in 1927, whereas the Bugatti span both starts and finishes later, ranging as it does from 1922 up to 1938. Of the four companies actively engaged in 1939, Auto Unions were the junior with a first entry in 1934, Maserati having their initiation in this class of racing in 1929. Alfa Romeo secured a signal success by winning the first Grand Prix in which their cars were entered (1924 at Lyons). But no concern can match the record of Daimler Benz of Unterturkeim, for they played a prominent part in racing long before the type name " Mercedes " was coined for one of their 1901 models. This company, whose products were indubitably masters of the road in 1939, supplied the engine for the winner of the first race ever held-the Paris-Rouen event on the 22nd July, 1894, and were thus entitled to celebrate the fortieth anniversary of continuous participation in motor racing in the year in which Auto Union started their career. A history of Mercedes and Mercedes-Benz designs by themselves would indeed be a by no means inadequate summary of what had gone toward Grand Prix racing.

Taking the wider view, however, there has been no monopoly of success, the seeds of technical development have been fertilised by many minds of diverse nationality.

Analysis of 1939 design practice reveals that the de Dion rear axle, front wheel brakes and the use of spring dampers, together with twin overhead camshafts, inclined overhead valves and light alloy pistons had all been derived from French drawing-boards, the full-roller-bearing crankshaft and continuously engaged Roots blower had come from Italy ; the detachable wire wheel and the delivery of compressed fuel/air mixture from England ; the use of positive displacement blowers, both for supercharging itself and two-stage compression, from Germany. To the U.S.A. must be ascribed the origin of supercharging and of multi-stages, but German engineers made a direct contribution in the high tension magneto, welded steel cylinder construction, the welded steel tubular frame, torsion bar springs, hydraulic damping, and the practical application of independent front suspension.

CHAPTER TWENTY-TWO

The Development of The Grand Prix Car

1947-54

Those who have read thus far will by now be familiar with the theme that racing car performance depends primarily upon engine power, and the effective use of the power available, measured against the opposing drag and centrifugal forces. It should also be recognised that when an engine capacity limit is enforced a situation arises where, to quote from Chapter 7, " the designer who chooses the largest piston area, the shortest stroke and the highest r.p.m., has secured a fundamental advantage ". To this might be added that when supercharging is permitted there is the alternative of raising manifold pressure.

From the foregoing it follows that when racing-car designers began to contemplate the post-war scene, they found that if they decided to opt for the 1½-litre, supercharged engine, permitted under the regulations, they must concentrate upon securing maximum air flow by having the maximum possible r.p.m., or the highest boost pressure, or both. There was no existing experience of engines combining high r.p.m. and high manifold pressure, for Continental designers had concentrated on the former aspect and British engineers (who had produced the world's champion 1½-litre car in 1937) had specialised in high supercharge pressures.

As far back as 1934, the M.G. Company proved the benefits of using an efficient single-stage, Vane-type compressor, and they were followed by E.R.A., Ltd., who used pressures up to 45 lb. per sq. in. to obtain outputs of around 9 h.p. per sq. in. of piston area. Interpreted in terms of a 1939 six-cylinder power unit (bore and stroke of 63 by 80 mm.), this represented 260 b.h.p. at 7,500 r.p.m., and a b.m.e.p. of 304 lb. per sq. in. at 3,750 ft./min. On the Continent the 1939 examples of the Type 158 Alfa Romeo with a bore and stroke of 58 by 70 mm. were developing 225 b.h.p. at 7,500 r.p.m., or 260 lb. per sq. in. at 3,450 ft./min., using a single-stage Roots blower, and the V8 Mercedes-Benz, using two-stage Roots blowers, gave 270 b.h.p. at 7,800 r.p.m. ; the equivalent with a bore and stroke of 64 by 58 mm. of 300 b.m.e.p. at 3,000 ft./min.

Post-war practice in the realm of 1½-litre supercharged engines may be divided into three categories. The first, and ironically the most successful, class is made up of Alfa Romeo and Maserati who continued to develop pre-war designs of limited piston area. Alfa Romeos were almost unbeaten during the life of Formula I and they form an outstanding example of the importance of development in relation to design, the output in 1951 being 70 per cent greater than it was in 1939. This was done by increasing the absolute manifold pressure from approximately 2 ata. to over 3.5 ata. (i.e. by 80 per cent) which resulted in a 35 per cent increase in b.m.e.p., this being a vivid commentary on the inefficiency of the Roots-type blower for high boost pressures, even when it is compounded.

The economic limit of boost pressure for two stages with the Roots blower may be set at around 2.3 ata., but Alfa Romeo decided that the mechanical simplicity of the device, coupled with compactness and ease of installation, was worth a basic inefficiency which was reflected in the fuel consumption of barely 1½ m.p.g.

Simultaneously with raising manifold pressure Alfa Romeo increased the piston speed of their engines from 3,450 ft./min. up to 4,300 ft./min., and as much as 4,750 ft./min. was used for brief periods on special occasions.

These are probably the highest piston speeds which have successfully been used in racing engines, but the designers of new post-war power units adhered to the classic theme of raising crank speeds within a limit of 4,000 ft./min., by using short strokes and multiple cylinders. This was in accord with a trend of design flowing from the earliest days, and can be evaluated in terms of sq. in. of piston area per litre of engine displacement.

If a limit of 4,000 ft. per min. piston speed is assumed, it can be demonstrated that engine h.p. increases in proportion to the piston area, and within the limits of 1½-litre engine capacity the number of cylinders for any given piston area can be calculated if the stroke/bore ratio is known. If, for example, a ratio of unity is assumed, a four-cylinder with bore and stroke of 78 by 78 mm. will give 30 sq. in. of piston area and a twenty-four-cylinder with a bore of approximately 45 mm., some 55 sq. in., the maximum crankshaft speeds being just under 8,000 r.p.m. in the first case, and just over 14,000 r.p.m. in the second. Theoretically, the twenty-four-cylinder would be 10 per cent faster on a lap than the four-cylinder and would, therefore, win a 300-mile race run at modern speeds by over a quarter of an hour.

Expressed graphically, the long-term trend points to 35 sq. in. per litre in 1954, but, in fact, the predominant engine of Formula I had only eight cylinders and 21.8 sq. in. per litre ; the Formula II, 1953, four-cylinder Ferrari, 2-litre (90 by 78 mm.) had only 20 sq. in. per litre and of 1954, the eight-cylinder, 2½-litre Mercedes-Benz (76 by 68.8) 22.4 sq. in. per litre.

There are two explanations why this long-term trend was halted. One is that piston speed does not tell the whole story of engine stressing especially as related to piston rings. The well-known specialist in these components, J. L. Hepworth, has pointed out that if one takes an engine with proportions 76 by 114 mm., there is at 4,000 r.p.m. a mean piston speed of 3,000 ft./min. and a maximum piston acceleration of 41,000 ft./sec.^{2} (if the connecting rod has a length twice that of the stroke). If, however, stroke be reduced to 76 mm., the piston speed remains unchanged ; but if the crankshaft is raised to 6,000 r.p.m. the maximum piston acceleration will then rise by 40 per cent to 57,500 ft./sec.^{2} Developing this theme, it can be shown that whereas the piston speed of the four-cylinder Connaught is 3,937 ft./min. and that of the B.R.M. 3,800 ft./min., the piston accelerations are 81,300 ft./sec.^{2} and 154,000 ft./sec.^{2} respectively. Thus although it remains true that engines with geometrically

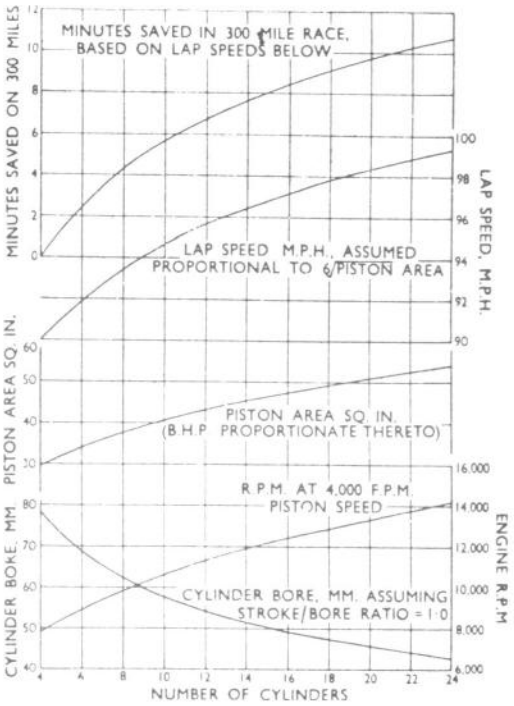

These curves show the relationship of 1½ litre engines with varying numbers of cylinders on a given circuit for lap speed and time over 300 miles.

proportionate cylinders of different size are identically stressed if their mean piston speed is the same, this does not hold good if they are geometrically disproportionate.

The practical consequence of this is that piston area can advantageously be increased by using large numbers of cylinders, but not by exaggerated bore/stroke ratios. Post-war experience has illustrated the practical limitations of the alternative concept of multi-cylinder engines and it may at this point be profitable to turn from these considerations of abstract engineering to some concrete examples of post-war practice.

If we start with the 1939 M.165 Mercedes-Benz engine for the W.165 car we observe from the cross-section that this V.8 was redolent of Unterturkheim practice. In particular one sees the welded-up steel cylinders, the exposure of the finned exhaust valve guide to water, the use of a drilled stem in the exhaust valve permitting sodium cooling and the characteristic all-roller-bearing crankshaft with split big ends. Particularly significant is the way in which the main bearing caps slide into the crankcase, the latter being tied into them with set bolts.

These engines were the first in the 1½-litre class to employ two-stage supercharging. Both blowers ran at engine speed x 1.25, the first stage with rotors 165 mm. long had a theoretical delivery of 2.15 litres, and the second with 95 mm. 1.25 litres. With an estimated volumetric efficiency of 85 per cent, we get a pressure rise of 9 lb. on the first stage and 12 lb. on the engine side of the second stage, giving a total of 21 lb. boost or 2.5 ata. In other words, on this engine the use of two-stage supercharging was determined by the desire to reduce power losses rather than to provide the highest possible pressures and corresponding maximum b.h.p.

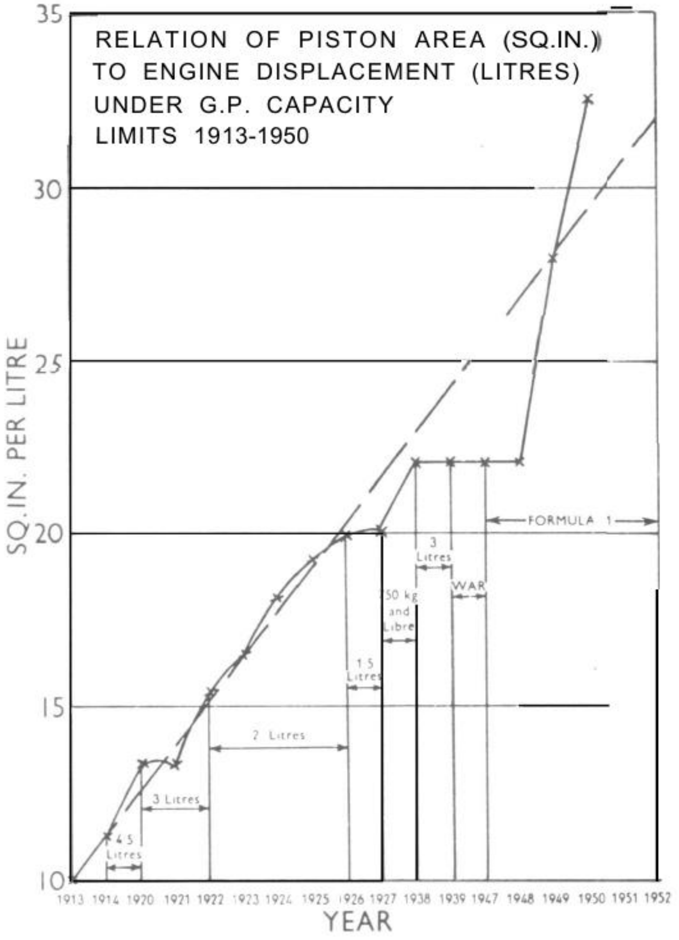

This curve shows the long term trend to increasing piston area per litre, but the latest practice conforms to the level of 1938-9.

The first wholly new post-war engine was the Arsenal-C.T.A., designed by Lory. This was also a V.8 and a comparison with the cross-section of the cylinder block of his 1927 Straight Eight Delage, reproduced on page 199, and with more detailed drawings of the engine given in Example No. 10, Volume I, support the theory that a man only designs one car in his lifetime.

The two four-cylinder blocks placed at the conventional included angle of 90 degrees were made in cast-iron with open water jackets

PLATE XXVI

All the complexity of the all-roller bearing V.12, double camshaft, 2-litre Delage engine designed by Plancton in 1923, and modified by Lory in 1924, is to be seen in this Cresswell drawing.

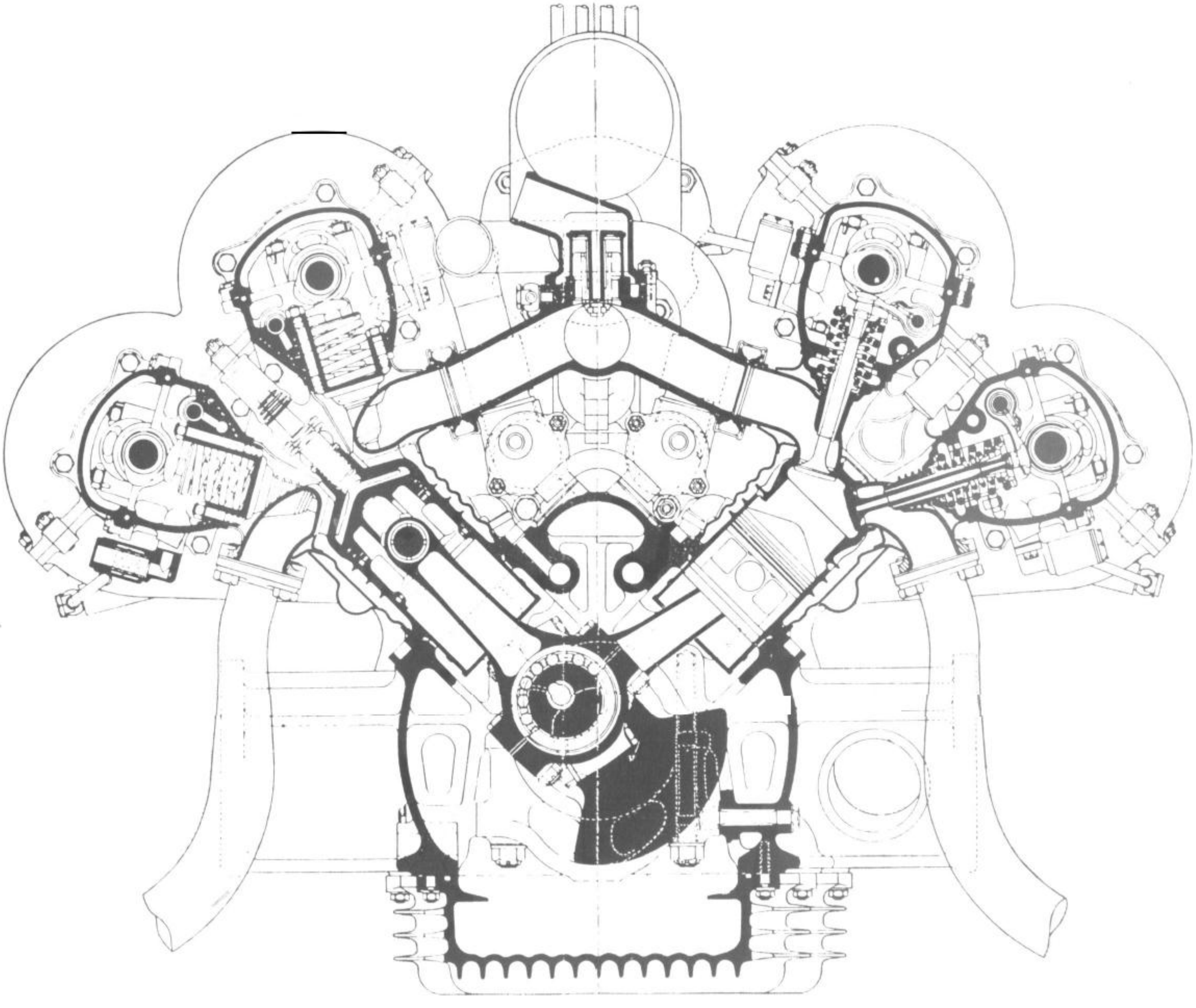

The drawing (Scale 1 : 4) shows the leading features of the 1939 V.8 Mercedes-Benz 1½ litre engine which gave 270 b.h.p. at 7,500 r.p.m.

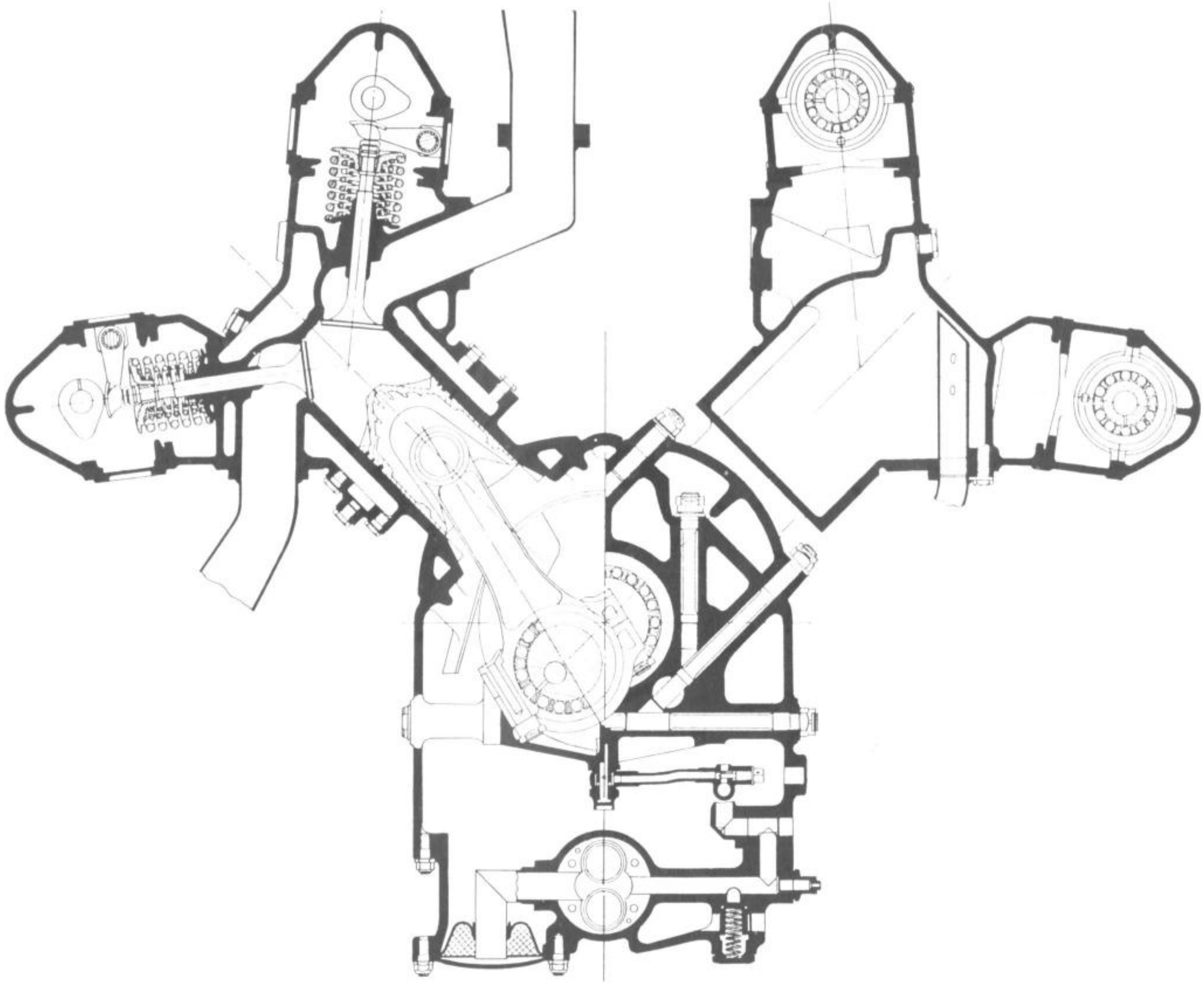

The 1947 Arsenal C.T.A. engine (a 1½ litre V.8) designed by Lory shows many features in common with his 1924-7 Delage engines.

THE

ND

IX

covered by plates. The two valves were inclined as before at an included angle of 100 degrees in the non-detachable (and, therefore, cast-iron) cylinder head. But, whereas the earlier engines had a single central sparking plug, on the later model two plugs were used off-set from the centre. Lory also used a full roller-bearing crankshaft assembly with split connecting rods, and as on the Mercedes-Benz the main bearings were tied in by transverse as well as by vertical bolts.

The two compounded Roots blowers were of equal size and ran at varying speeds with a rather higher boost than was provided on the German 1939 engine, and there was approximate equality in engine output and optimum crankshaft speed. As this engine never completed a lap in a Grand Prix we cannot estimate its effectiveness as a racing instrument, but one may suspect that the block and head construction would set a ceiling on maximum output on thermal grounds and from 1948 onwards 270 b.h.p. would have been inadequate.

Even less can positively be said about the Flat 12, Porsche-designed, Cisitalia, but in view of the renown of the designers and the care and skill evidenced when the drawings are inspected, one must regret seriously that this engine was never developed. Amongst the many unique features was the use of single-stage Vane-type superchargers giving internal compression, and, as mentioned earlier, these form an efficient, if somewhat bulky means of supplying manifold pressure of 3 ata. or even more.

So far we have dealt only with precedents and projects, but when we turn to the Colombo-designed V. 12, two-stage supercharged, double overhead camshaft Ferrari, we are faced with an engine which achieved some success in a brief working life and which could doubtless have been developed much further if the constructors had not succumbed to the rival attraction of a 4½-litre unsupercharged power unit.

The cross-section of the Ferrari shows how the detachable cylinder liners are spigoted into the detachable light alloy head. The longitudinal section of the engine shows also the employment of hairpin-type valve springs, employed almost without exception in the world of racing motor cyclists but only by Ferrari and B.R.M. amongst Grand Prix cars.

With increasing engine speed and range of r.p.m., the valve gear problem grows obviously more difficult and it is sobering to reflect that at 10,000 r.p.m. each valve of a multi-cylinder engine will be lifted through about 0.4 in. and returned to its seat within a period of 0.005 seconds. The elimination of periodic valve spring surge over a wide range of r.p.m. is normally countered by the use of two, or perhaps three, coil springs lying one within another, but the alternative hairpin-type spring not only considerably reduces the mass to be moved but also gives great freedom from natural surge frequencies over a wide band of engine speed. It is not easy compactly to install the hairpin spring in a multi-cylinder engine, but this is the only disadvantage of the device.

The conjunction of a double camshaft cylinder head with two-stage supercharging gave the Ferrari an output of 305 b.h.p. at 7,500 r.p.m. which compares with 280 b.h.p. at the same crankshaft speed obtained on the single camshaft model, having otherwise identical constructional features and with single-stage boost. Both of these engines had the high piston area of 42.2 sq. in. (28 sq. in./litre) but even the more highly developed of them had the rather moderate output of 7.25 h.p. per sq. in, and 260 b.m.e.p.

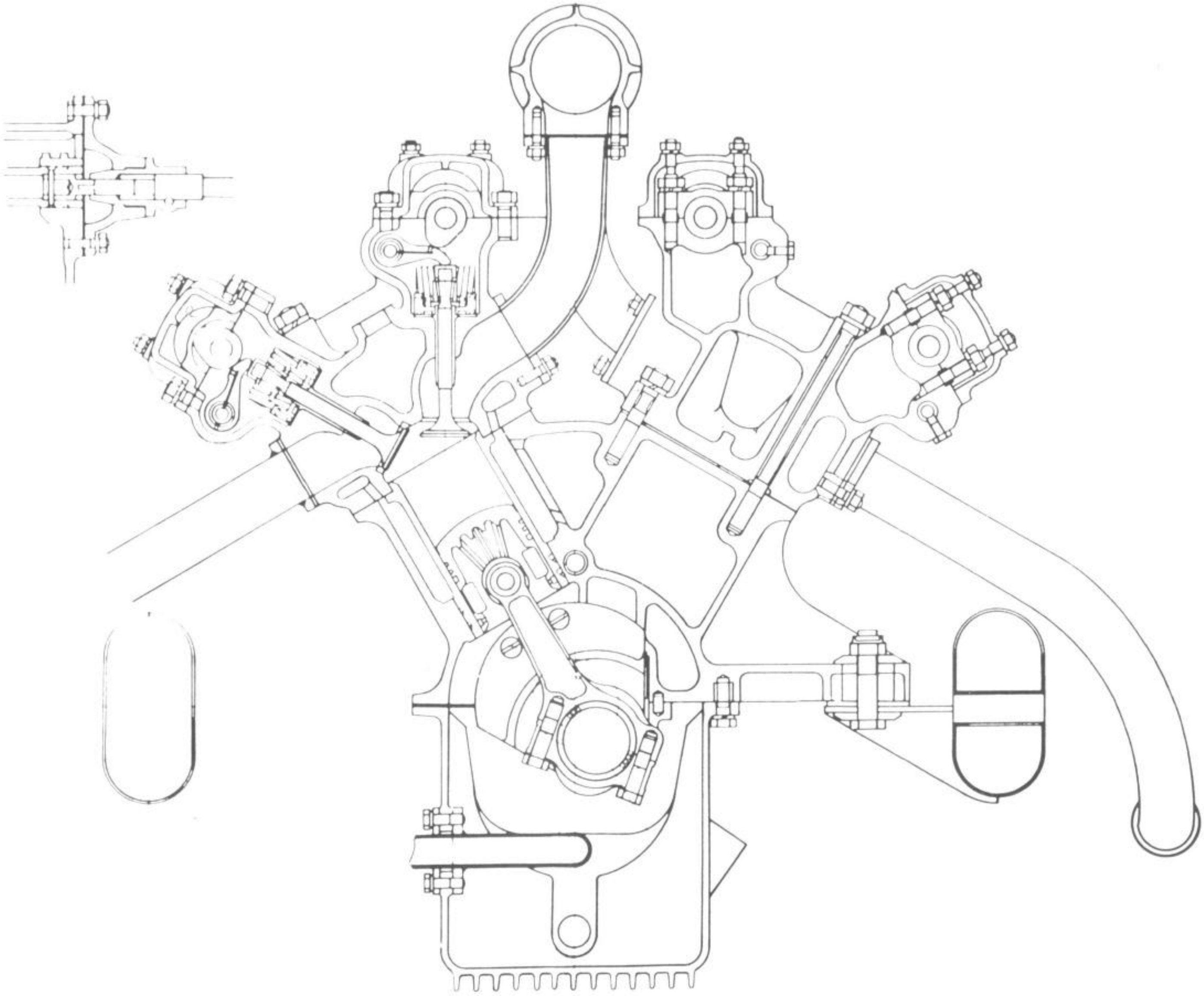

The 1949 V.12 Ferrari engine was notable for using two camshafts and two stage supercharging. With dimensions 55 x 52.5 m.m.. it was of l½ litres capacity, had detachable cylinder heads, wet cylinder liners, hairpin valve springs and gave 305 b.h.p. at 7,500 r.p.m.

That is to say, the fastest car competing in 1949 had basic engine performance factors lower than those attained in 1939.

The British effort in the shape of the B.R.M. was far more ambitious. The basic proposal was to raise pre-war crankshaft speeds by 50 per cent and 1939 absolute manifold pressure by at least 35 per cent. Thus output per litre would be doubled, and gross power raised beyond the figure attained on the 1939 3-litre cars.

To achieve these ends it was imperative to have a piston area of some 50 sq. in. and a boost pressure of not less than 40 lb. per sq. in. The general layout of the engine and the type of blower used stems logically from these premises. To obtain the required piston area it was necessary to have at least twelve cylinders and the choice in fact made of sixteen cylinders was determined by two principal considerations. In the history of motor racing, straight-eight engines have been the dominant type, and although, from a constructional point of view, the B.R.M. may properly be regarded as two V.8's placed back to back, philosophically it is more correctly considered as two straight-eights face to face.

When starting with a clean sheet of paper in 1946 the B,R.M. designers probably thought that twelve cylinders went scarcely far enough along the lines of maximum piston area, whilst a 1½-litre twenty-four-cylinder would have involved very formidable mechanical complications. Although the type was known in the aircraft world no such engine had ever been constructed for a racing car, whereas sixteen-cylinder engines were well-established. Both Bugatti and Maserati had constructed such power units (which followed upon the 1927 Fiat practice of coupling two in-line engines together) and the V.16 designed by Porsche for the Auto Union had been exceedingly successful in the 1934-7 period. Between 1938 and 1939 there was a good deal of discussion concerning V.16 3-litre engines and as recorded on earlier pages Alfa Romeo actually ran cars with engines of this kind in the Grand Prix racing of the time. In the technical press of the immediate pre-war period the merits of the 135 degree Vee angle were remarked upon. It was shown that such an arrangement reduced the bonnet height (and therefore the frontal area) and that it was possible to fit the engine into a frame of normal design and width.

Just prior to the war Sir Harry Ricardo was engaged by Alfa Romeo to design a 3-litre V.16 engine with this angle between the banks, and in his design the well-established Alfa Romeo practice of driving the superchargers and overhead camshafts through an ascending train of gears placed between crank throws numbers 4 and 5 was developed by adding a descending train coupled to a quill shaft giving limited angular movement and driving the clutch at half engine speed. This layout greatly mitigated the problems of running an eight-throw crankshaft over a wide range of r.p.m. without periodic vibrations, and provided the basic layout which the B.R.M. designers decided to follow.

The development of this line of thought resulted inevitably in a complicated engine that was heavy in relation to the swept volume ; but neither of these factors was of necessity a serious disadvantage. Looking back thirty years, we see that one of the most successful engines of the old 2-litre limit was the V.12 Delage, the complexity of which can best be appreciated from a study of Plate No. XXVI. Looking at the present, we see that the most successful engine is the straight-eight Mercedes-

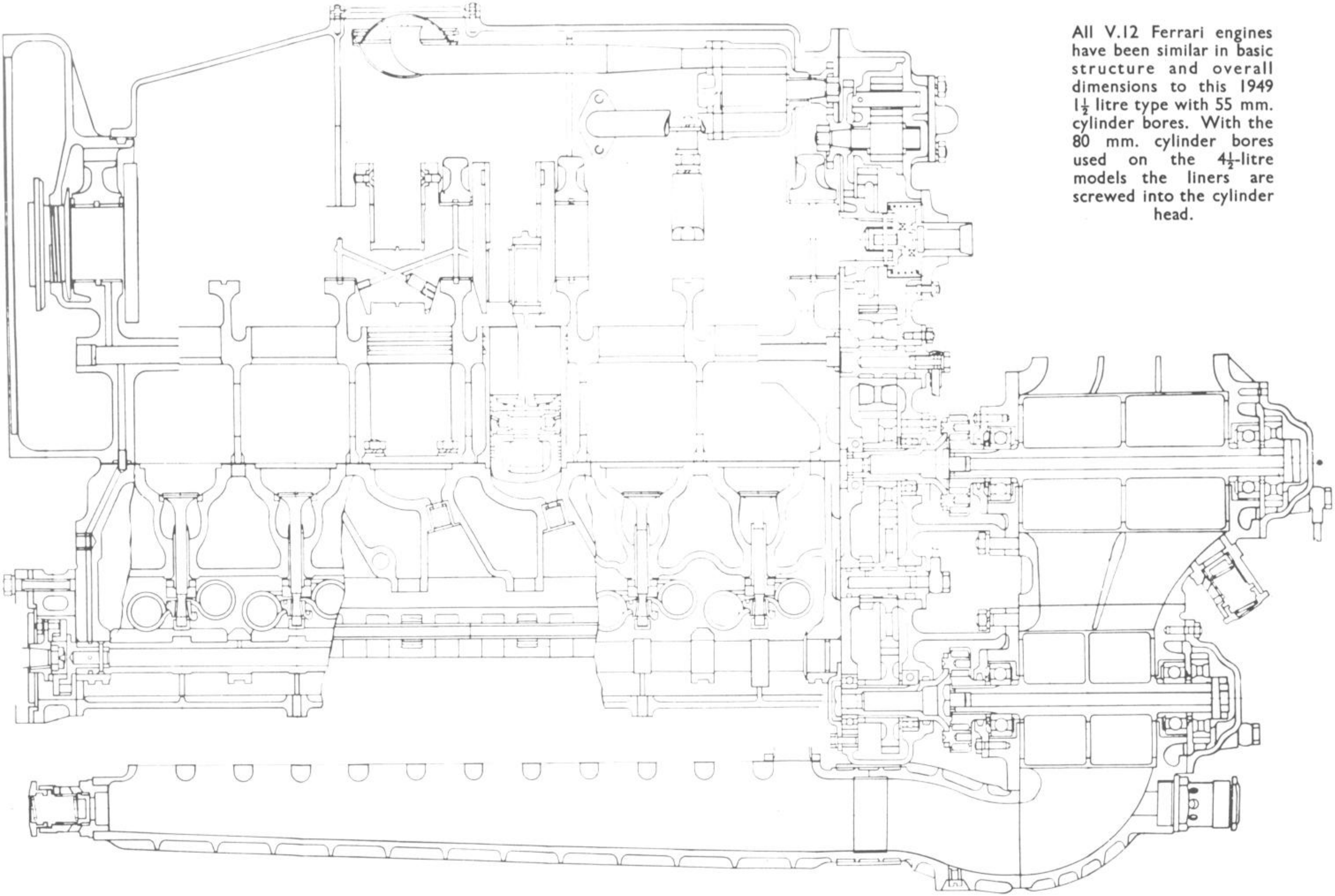

All V.12 Ferrari engines have been similar in basic structure and overall dimensions to this 1949 1½ litre type with 55 mm. cylinder bores. With the 80 mm. cylinder bores used on the 4½-litre models the liners are screwed into the cylinder head.

Benz, which, in common with the B.R.M., has an offset propeller shaft drive with central gears and inclined cylinders arranged in two blocks of four.

But there is a big difference between the cylinder diameter of the two engines, and there can be no question that a design such as the B.R.M. which has cylinders of less than 2 in. diameter and inlet valve only 1.18 in. diameter is exceedingly sensitive to small changes in combustion chamber shape, port design and valve timing ; also that there are problems in maintaining the theoretical valve timing on an engine running at full power at, say, 11,000 r.p.m. which do not occur on a test rig at the same speed.

So far as weight is concerned it must be admitted that on the basis of lb. weight per litre, the B.R.M. scaling 340 lb. compared unfavourably with the V.12 4½-litre Ferrari with about 90 lb. per litre, the 2-litre Maserati with 165 lb. per litre, or even the 1922 Vauxhall 3-litre which weighed 250 lb/litre. Moreover, one may compare the 505 lb. total of the B.R.M. with the 442 lb. of the similarly sized Mercedes-Benz type W.165 of 1939. Whereas, however, the latter developed 270 b.h.p. and thus had a weight of 1.65 lb. per h.p. the 1951 B.R.M. weighed 1.2 lb./h.p. So on a power : weight ratio, the B.R.M. cannot be considered defective and, indeed, in fully-developed form, it has been one of the few engines fitted to a racing car which has developed more than 1 h.p. per lb. In view of these facts it may be asked why the B.R.M. has so negative a record in the GrandesEpreuves, and why in their single appearance abroad in a race of this category the performance of these cars recalled the words of Goldsmith : " Remote, unfriended, melancholy, slow."

The answer lies in the disproportion between the means essential for the development of an engine of this kind and the financial and physical resources which were, in fact, available.

The gap, which would have been large enough in any case, was magnified by the choice of a centrifugal supercharger. The. merits of these components have been mentioned in the description of the car (Example 19) and some comments on the disabilities of the type have been set out in Chapter 12.

Here it was shown that the centrifugal type has by its very nature a boost curve which varies sharply with speed, and cars fitted with this type have been notoriously deficient in low speed torque. It was, however, thought in 1947 that the knowledge accumulated in aero engine work during the past decade would mitigate the disadvantages, so that adequate power could be secured in the low speed range coupled, with outstanding efficiency at peak speed.

In the long run these expectations were largely realised. In 1952-3 the B.R.M. engine had a mean effective pressure of 425 lb./sq. in. at 10,000 r.p.m., and the useful figure of 360 lb./sq. in. at 8,000 r.p.m., dropping back 310 lb./sq. in. at 7,000 r.p.m. But as run in the Formula 1 of 1950-1, with an earlier type of blower, giving a lower boost pressure, the figures obtained were far below those above quoted, being 345, 290 and 235 Ib./sq. in. at 10,000, 8,000 and 7,000 r.p.m. respectively.

Owing to the high crankshaft speed of the engine, it is difficult immediately to interpret these figures in terms of comparative road performance, but in Formula I (1950-l) form it can be shown that the surplus h.p. available for a B.R.M. driver on fifth gear was considerably lower than that of a Ferrari on fourth gear below 160 m.p.h. The benefit of the lower gears at lesser road speeds was limited by

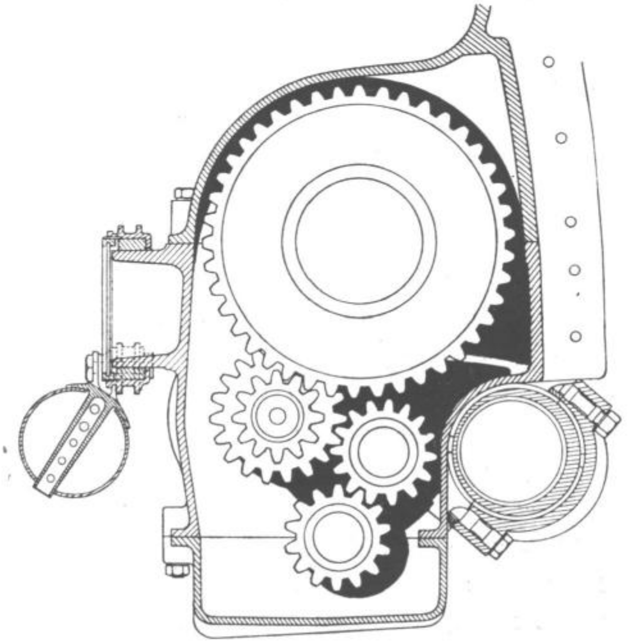

In the post-war period, 1949-53, only B.R.M. and the 1954 Maserati designs have followed the Mercedes-Benz layout of 1938-9 in which (as shown here) the gear shafts were mounted transversely below the final drive.

the relatively narrow band of useful r.p.m., the ratio being about 1.33 : 1. Hence, to maintain effective performance it was necessary to engage fourth speed at 130 m.p.h., third at 110 m.p.h., second at 90 m.p.h., and first at 70 m.p.h. If, in consequence, the driver had to make ten extra gear changes in a five miles circuit, the time lost on this score alone would be not less than four seconds, or four minutes in the course of a race.

Unfortunately, another and perhaps even more serious penalty attached to the steeply rising torque curve. As shown in curves reproduced (*inter alia)* on pages 143, 147, 232 and 245, it has been normal to provide drivers with engines having a falling torque curve in the normally used range of engine speed. If wheel spin developed at, say, 100 m.p.h., and 6,000 r.p.m. on an indirect gear, there was some prospect that it would automatically die out with rising engine speed and with a constant throttle opening the tendency to spin would certainly not increase. Hence a small adjustment by the driver could restore stability. On the B.R.M., by contrast, if the engine speed rose from 7,000 to 9,000 r.p.m. the torque increased by 45 per cent, and in the absence of immediate and major action by the driver, control of the car was lost.

The development of maximum cornering power by the four-wheel drift (in which the driver keeps the rear wheels on the verge of spin) has contributed greatly to post-war circuit speeds and it was, therefore, especially unfortunate that owing to the characteristic of the B.R.M. power curve the drivers of these cars could make but little use of this valuable tactic.

Attack on these problems was delayed by the difficulties of machining and assembling the prototypes and during the effective life of Formula I the basic development thereof was delayed by a number of cracked cylinder liners and broken connecting rods ; troubles finally traced to water leaks at the cylinder head joint.

It should now be clear why the B.R.M. failed to challenge the pre-war designed Alfa Romeo before 1951, and it is but an academic satisfaction that it could have done so if it had been available in 1953 form.

The fact that the Ferrari successfully challenged Alfa Romeo with unsupercharged engine ran clean counter to theoretical expectation.

Before 1950 the battles in Formula I Grands Prix were fought between 4½-litre Lago Talbot cars with 63 sq. in. of piston area, which, being unsupercharged, had a manifold pressure of 1 ata. the 1½-litre Maseratis with a piston area of 29.6 sq. in. supercharged at 2.6 ata. and the 1½-litre Alfa Romeos with 32.8 sq. in. of piston area with a manifold pressure of 2.7 ata. From these facts we can assess the potential power of the engines by multiplying the figures together thus :

POTENTIAL POWER IN UNITS MEASURED BY PISTON AREA x MANIFOLD PRESSURE

Talbot — 63 (100)
Maserati — 77.5 (123)
Alfa Romeo — 87.5 (139)

(The percentage figures are placed in parenthesis.)

On this basis the unsupercharged car was clearly at a considerable disadvantage and it proved generally inferior in speed in immediate post-war racing history.

The advent of the 4½-litre V.12 Ferrari in 1950 posed the question whether this inferiority was due inherently to the unsupercharged principle, or merely an accident caused by Mr. Tony Lago's decision to use a six-cylinder engine in his racing cars which had the same dimensions as those in regular production for use in touring cars.

Ferrari built only twelve-cylinder Formula I cars, and the 4½-litre version had a bore and stroke of 80 mm. by 74.5 mm., and a corresponding piston area of 93 sq. in., so that with 1 ata. manifold pressure it had a potential performance 47.5 per cent higher than the Talbot and 8 per cent ahead of the best existing supercharged power unit. It is, moreover, easy to envisage a sixteen-cylinder 4½-litre car with cylinder dimensions of 73 mm. by 67 mm. which would have a piston area of 104 sq. in., and therefore a performance potentially 65 per cent greater than the Lago Talbot and nearly 20 per cent ahead of the eight-cylinder supercharged Alfa Romeo.

In practice, Ferrari represented the high water mark of piston area for unblown Formula I engines, and correspondingly the B.R.M. had the largest piston area of the supercharged types—a fact which makes it all the more interesting to compare the interrelated aspects of cylinder capacity, piston area, and supercharge pressure.

The B.R.M. engine had sixteen cylinders, a bore and stroke of 49.53 mm. by 48.26 mm., giving it 47.8 sq. in. of piston area. Hence the potential performance should equal that of rival cars with manifold pressures as set out below :

MANIFOLD PRESSURE NEEDED ON B.R.M. TO GIVE EQUAL POWER TO COMPETING CARS

Competing Car	*Required B. R. M. manifold pressure*
Lago Talbot 4½-litre	1.32 ata.
Maserati 1½-litre	1.62 ata.
Alfa Romeo 1½-litre	1.83 ata.
Ferrari 4½-litre	1.93 ata.
Sixteen-cylinder 4½-litre	2.17 ata.

To put the matter in more general terms, the B.R.M. engine should be capable of equalling the power of a Lago Talbot on 5 lb. boost ; of a Maserati with 10 lb. boost ; a Ferrari with 15 lb. boost ; and an unblown 4½-litre engine with an equal number of cylinders with an 18 lb. boost. As the 1,100 c.c. version of the E.R.A. with Zoller supercharger won a 200-mile race at Donington using 40 lb. boost as long ago as 1937, it is apparent that the B.R.M. was not set any formidable task in equalling the maximum power of its rivals. It should, indeed, have been able to beat them by a very handsome margin.

To sum up, it was on fundamental grounds correct to choose a 1½-litre supercharged engine against a 4½-litre unsupercharged type as the ideal instrument for winning Formula I Grand Prix races but the unsupercharged engine offered very material benefits for any concern wishing to produce the best possible result within limited financial and physical means. It ran the length of a Grand Prix race on one tankful of fuel, and, taking into account time lost in stopping and restarting, this alone added at least a half per cent to the average speed. More important is the factor of reliability, for as engine volume is diminished and manifold pressures and crank speeds raised, so are engineering problems multiplied.

This is true even when enormous resources are available for development and research, as vividly shown by contrasting the racing record of the *circa* 6-litre, 10 lb. boost, 5,000 r.p.m., Mercedes and Auto Union cars of 1937 with their 3-litre, 25 lb. boost, 8,000 r.p.m. successors in 1938 and 1939. In the former year, of 71 cars jointly entered there were only eight retirements from mechanical trouble, a reliability factor of 89 per cent. In the ensuing two years there were 29 retirements out of 93 entrants, a reliability factor of only 69 per cent.

Nevertheless, reliability alone will not win races and just as the B.R.M. was a logical climax to the theory of Peter Berthon that power was best won by an engine of limited swept volume, high crankshaft speed, and high manifold pressure, so was the Ferrari the embodiment of opposing theory of Aurelio Lampredi that atmospheric inlet pressure could be offset by doubling piston area and trebling swept volume. As we have seen, this solution gave an engine that was approximately 100 lb. lighter than the B.R.M. and had more power at under 85 per cent of maximum crankshaft speed ; and these excellent results were attained with quite modest performance factors, the h.p. per sq. in. piston area being only 11 per cent higher than in the 1922 Vauxhall.

Turning now from a consideration of features specific to the individual make to a summary of details of common importance in Formula I cars, it must be recorded that a major change was the development of strip-type bearings which became almost universal in Formula II engines. From 1913 onwards ball or roller bearings were rightly considered *sine qua non* where the highest efficiency was needed regardless of constructional cost. During the period of World War II, and following upon experiments carried out as far back as 1934 in the U.S.A., plain bearings made from coated steel strip were developed to a high degree in aviation engines built in England. This in turn led to the introduction of this type of bearing by Vandervell to the Ferrari series of engines and even at crank speeds as high as 7,000 r.p.m. carefully controlled bench trials showed a clear gain in mechanical efficiency as compared with a roller and needle bearing assembly installed in an otherwise unchanged power unit.

As supplied by Vandervell, the bearing shells are made in halves formed out of a strip of steel 0.060 in. thick which is continuously coated to a depth of 0.010 in. by a layer of copper alloyed with 20-26 per cent lead and l-2 per cent tin. This copper/lead facing is in turn covered with a lead-indium overlay approximately 0.0015 in. thick, and although of such a very small dimension this coating, which actually contacts with the crankshaft, remains upon the bearing for the length of its life and plays a most important part in ensuring longevity and low friction losses.

Similar bearings are supplied to the B.R.M., where they have proved equally successful at even higher crankshaft speeds, figures of over 10,000 r.p.m. having been attained.

Sparking plugs have been greatly improved, particularly in respect of being able to meet more widely varying conditions. World War II experience with aluminium oxide insulators showed that these had a mechanical strength and conductivity greatly superior to the traditionally established mica insulation. Following up work on plugs for highly supercharged British war-time aero engines, the Lodge Co. developed in the immediate post-war period a series of 14 mm. racing type plugs which showed a marked improvement on pre-war types, both in respect of their absolute endurance when running at very high b.m.e.p., as in the Alfa Romeo racing engines, and in ability to resist fouling by excessive oil or fuel.

The development of the unblown type of power unit was assisted by the construction of single carburetters embodying double (or triple) choke and jet assemblies which carburate the individual cylinders of a six-cylinder power unit with only three instruments. With a similar installation on a twelve-cylinder Vee-type engine, pairs of cylinders can be given equal mixture supply.

Only Cisitalia has followed the Auto Union practice of rear-engine mounting and B.R.M. have been the only concern to adopt the alternative Mercedes-Benz concept of a two-way inclined transmission line, described in detail in Example No. 17, Volume 1.

Both Alfa Romeo and Ferrari have used a central propeller shaft and combined gearbox and final drive aggregate mounted at the rear of the frame. This has raised the driver's seat and increased frontal area by comparison with the practice pioneered by the two pre-war German

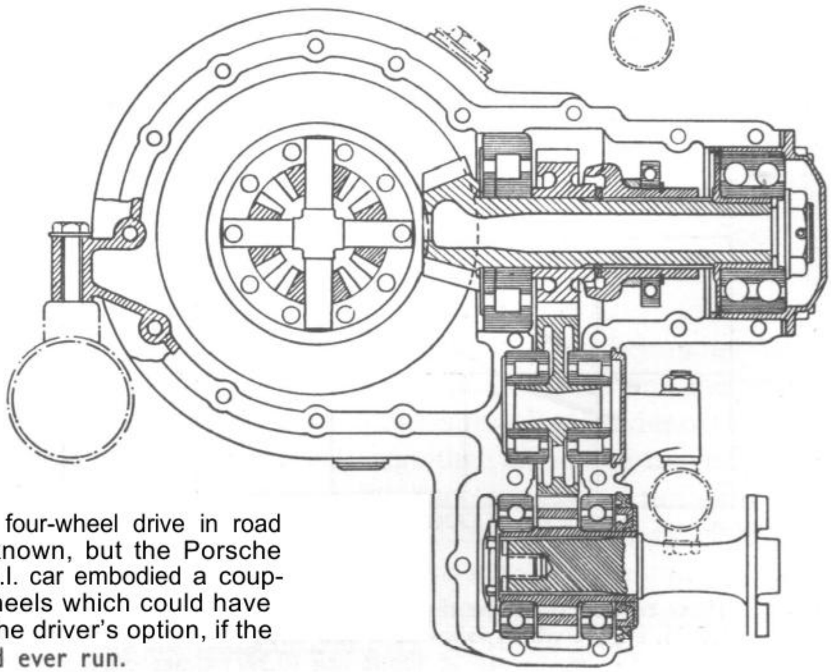

The possibilities of four-wheel drive in road racing remain unknown, but the Porsche designed Cisitalia F.I. car embodied a coupling to the front wheels which could have been engaged at the driver's option, if the cars had ever run.

companies, but there has been a general feeling amongst drivers that both visibility and control were improved by a moderately high seating position.

With the exception of Cisitalia the de Dion type rear axle has become standard on most pre-1954 designed racing cars, and although Alfa Romeo continued through four seasons of racing with their original swing axle layout, they converted some of their cars to de Dion late in the 1951 season.

Swing axles give inherent over-steer for two principal reasons. The roll centre is very high, being determined by the intersection of lines drawn from the centre point of the tyre tread through pivot point on each swinging half axle. This in turn results in a large proportion of the over-turning moment being carried on the rear wheels, with a consequent deterioration in their joint cornering power.

Movement of the car on its suspension results momentarily in the rear wheels being heavily splayed out. This angle to the road also reduces their cornering power particularly if, simultaneously, centrifugal force is relieving the nearside tyre from its normal proportion of weight carrying.

From 1948 onwards Alfa Romeo mitigated these disadvantages by giving a marked dihedral to the half axles when the car was in a normal loaded condition. By thus ensuring that the rear wheels were inclined inwards (relative to the car) the cornering power thereof considered as a couple was augmented by perhaps 10 per cent.

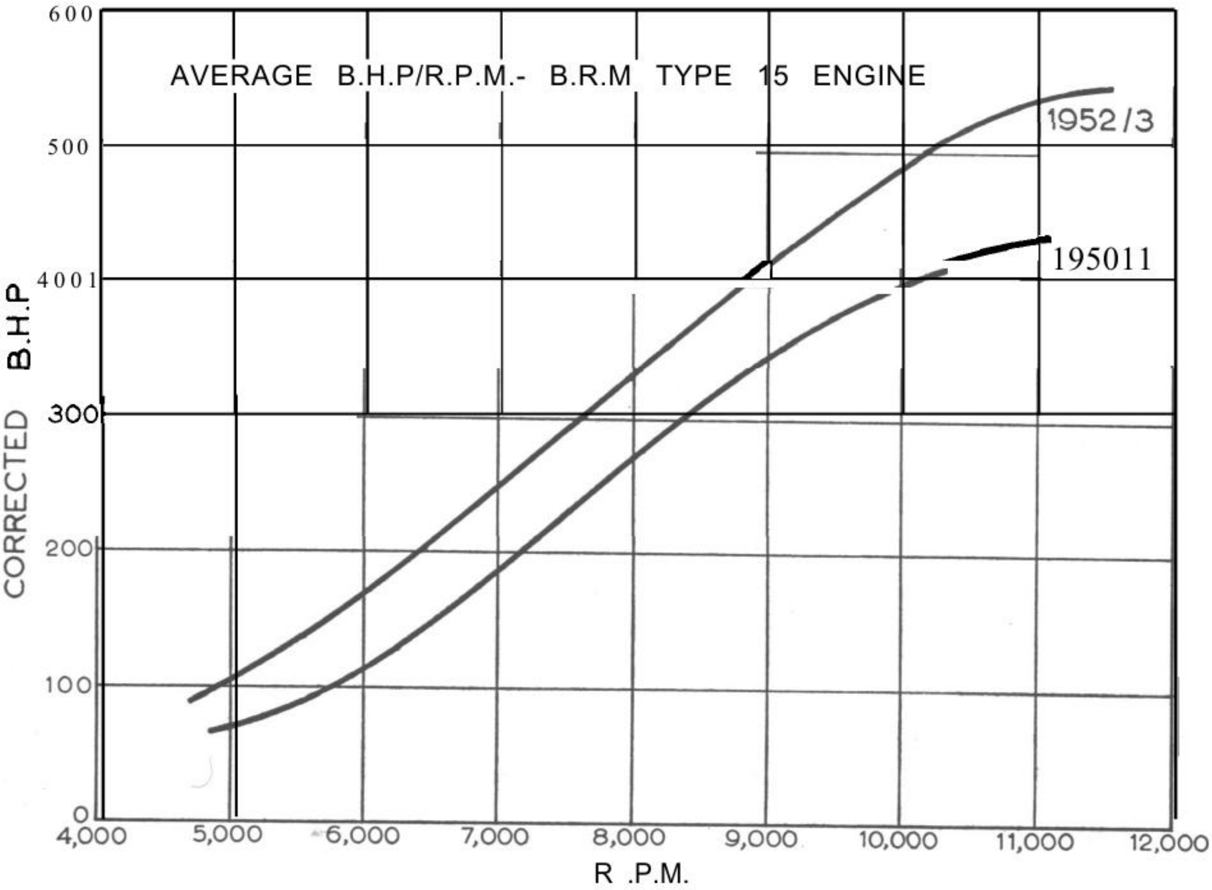

These two curves show the big change in power output and torque characteristics on the B.R.M. engine which followed a new design of blower fitted after 1951. The clutch shaft ran at about half (0.597) times crankshaft speed.

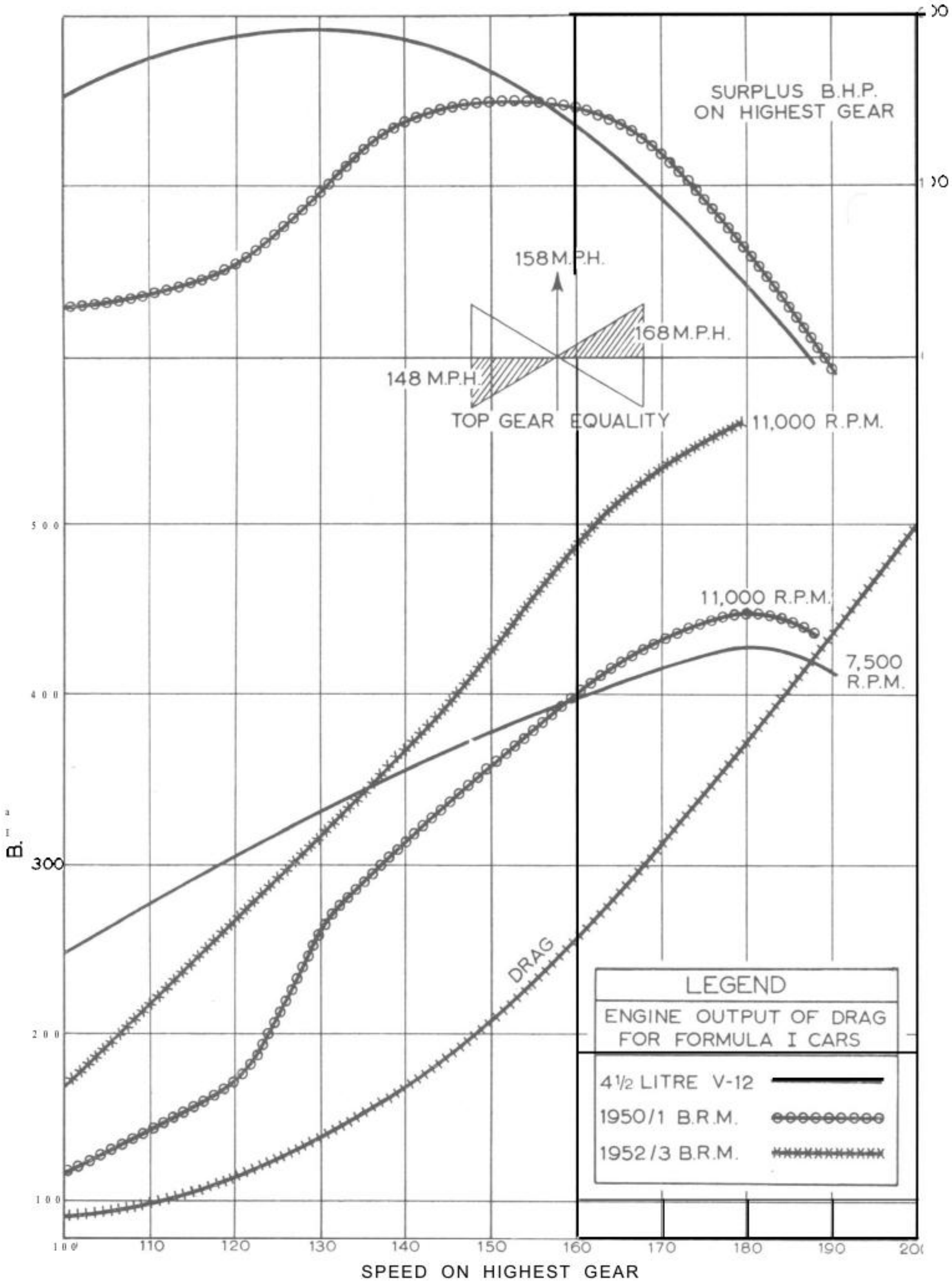

The power available at the basis wheels on the 1950-1 and 1952-3 B.R.M. is here compared with a 4½ V.12 car at various road speeds in a gear giving comparable maximum speeds.

By reason of swing axle over-steer, aggravated by a particularly short wheelbase, the first Formula I Ferraris suffered from notably poor handling powers and the works resorted to lead ballast at the rear of the car to overcome this problem before embracing the de Dion system in the Formula II cars of 1949 and then in the unsupercharged Formula I cars of 1950 and subsequently. Other racing cars considered in this review have continued to use live rear axles despite the known disadvantages of unsprung weight and torque transfer.

During the life to date of Formula I, leaf springs were used throughout for the rear suspension systems with the sole exception of the Simca Gordini using links and torsion bars, and the B.R.M. using the Lockheed air strut. The contribution of the latter to weight reduction has been put on record, but despite theoretical merits there is at the moment insufficient data to prove that it is superior as a suspension element *per se*. It is indeed somewhat remarkable that the two cars having the best road holding of all Formula I models (Alfa Romeo and Ferrari) used a single, and somewhat stiff, transverse leaf spring at both front and rear of their cars. The i.f.s. used by Alfa Romeo has been based on trailing arms, and by Ferrari on the more normal unequal length wishbone system, and these layouts are apparently regressive from a technical standpoint. One can only conclude that the ideal rate of suspension on a racing car has yet to be found and observe that the somewhat harshly sprung post-war models have had a considerably higher centre of gravity than the pre-war types. It is possible that given softer suspension their roadworthiness would have been adversely affected by roll.

Welded tubular frames of round or oval section have dominated post-war construction and nickel chrome molybdenum steel has been universally used for this purpose.

No comparison between pre- and post-war racing car performance is possible without drawing attention to the lower laden weight of the Formula I cars. Due to very high fuel consumption the Type 159 Alfa Romeo has gone to the start weighing 21.5 cwt., but the 4½-litre Ferrari has scaled less than a ton all-up so that it has had superiority in h.p./laden ton, the figures being approximately 386 h.p./ton for the unblown and 354 h.p./ton for the blown model. Neither factor falls far short of the 400 h.p./ton realised by the 1939 cars when carrying 75 gallons of fuel. But with not less than a 5 per cent reduction in h.p./laden ton, there has been a 10 per cent diminution of h.p./ sq. ft., and it is in defiance of these facts that the post-war models have, at their peak, finished faster than the pre-war types on circuits having such differing characteristics as the Nürburg Ring and Rheims. As the brakes are in use for perhaps one hour out of the three hours taken for a 500 km. race, it is reasonable to suppose that changes in brake performance may affect race speeds by up to, say, 5 per cent. Brake linings having a better combination of fade resistance and stable, high, friction coefficient have become available in the post-war period and, as in the case of bearings and sparking plugs, it is interesting to record that England, which has made no effective contribution to Formula I racing in the shape of a complete motor car, has taken the lead in the production of a vital component. The Ferodo Co. has been prominent in this field and Dr. R. C. Parker, Technical Director of this company, has kindly contributed the following comments :

The very arduous conditions imposed on friction materials during the war years ensured that when Grand Prix racing recommenced greatly improved materials would be available. The years 1939-47 saw the development of a number of new Ferodo qualities, of which three were later to be submitted for Grand Prix events, viz. MR.41, MZ.41, and VG.95. Each of these materials offered a number of specific improvements over the pre-war materials, but this did not mean that the choice of lining for each car was automatic, for the characteristics of each vehicle had to be studied before the correct choice could be made. Indeed, in the period 1948-52 many further lining modifications were made to meet specific characteristics and although much of this work was based on the fundamental friction work that had its origin during the war years, research has been pursued with even greater vigour in the post-war period.

In the interest of logic, comments on the various brake linings required for the Grand Prix cars will be preceded by a brief description of the linings themselves. Developments since 1939 have followed along three independent channels : namely, the textile based quality, the rubber/resin moulded quality, and the resin moulded quality. All these three types were made prior to 1939, but it is only in recent years that their several functions have begun properly to be understood.

Typical of the three types are Ferodo MR.41 and MZ.41, Ferodo VG.95 and VG.97, and the Ferodo DM range. The fade resistance of these linings increases in the above order, as does a number of their important physical properties such as hardness, elasticity and so forth. Their order of durability cannot be so clearly stated since this value depends very precisely upon the operating conditions and the availability of three basic types, each with their own variations, does not represent pandering to arbitrary fashion, but is dictated by necessity.

The magnitude of the friction level need not be dealt with at length as a lining may be made with any required friction level within the range now accepted by the majority of brake manufacturers. Indeed, this aspect is rapidly becoming one of the minor problems in brake lining design and what is needed can readily be given. Thus the Alfa Romeo with a two-leading shoe brake uses a lower friction material, though of the same type, than that used on the Simca Gordini and Talbot with their single-leading shoe brakes. Again, the Maserati with the two-leading shoe front brakes and the single-leading rear brakes have employed two qualities of differing friction level.

The biggest factor affecting the choice of a lining for racing has been the cooling and the design of the brake drum. Some post-war touring cars have had brakes extremely prone to heat spotting, while complaints of front end judder at high speeds have been frequent. Both of these vices have been present to a lesser degree in many Grand Prix cars. A study of the brake drums used on Grand Prix cars shows they all have one thing in common, i.e. they all employ a bimetallic system consisting of a light alloy housing and an alloy cast-iron or cast-steel liner. The biggest difference has been the amount of cooling employed and an examination of the photographs of the frontal views of the Alfa Romeo, Ferrari and Talbot cars, for example, will show that the exposure of the front brake drums to the air decreases in the above order. It has also been noticeable that the Alfa Romeo 158s have had less braking troubles than the Ferraris, and the Ferraris less than the Talbots. It is perhaps significant to recall that on the 1938 Mercedes Type W.163 which had front brake drums well concealed by the tyres, it was found necessary to replace the orthodox peripheral finning by a type of centrifugal fan that not only caused air to flow over the drum surface, but also extracted air from within the brake drum. Not unconnected with the cooling problem is the fact that the Maserati and OSCA cars have had little or no braking trouble since the shoes were made wider on the later models.

The relatively low temperature developed on the Alfa Romeo Type 158-9 has enabled it to run successfully on textile linings, and in their championship year (1951) Ferodo MZ.41 was used throughout. The softer properties of the textile lining, and hence its high ratio of real to apparent area of contact, has not caused any trouble with heat spotting, drum distortion, or judder. It is of particular interest to note that in the previous years Alfa Romeo ran on MR, and to cope with the higher speeds they shortened the lining on the trailing shoe. Although this device was not primarily introduced for this purpose, it increased the ratio of the apparent to the real area of contact and so minimised localised *high temperatures on the drum at the expense of heavy pedal pressure. The use of MR.41 quality enabled the same advantages to be retained but with a normal pedal load.*

The zinc wire quality, MZ.41, was used on the OSCA, but on the 4 CLT Maserati with its two-leading and single shoes it was found that VG.95 on the leading shoes and MZ.41 on the trailing shoes was a good combination.Indeed, this choice gave them a compromise between good jade resistance, good wear, and resistance to drum spotting. One Maserati also appeared with wider two-leading shoes all round, and this had a satisfactory brake performance with MZ.41.

The 4½-litre Talbot was alone among Grand Prix cars to use a dry mix/resin quality. This type of material was required to give the fade resistance necessary in view of the relatively poor cooling, although heat spotting and judder did occur. The rubber/resin moulded type of lining with its even greater heat resistance could not be used on this car without inducing an unacceptable intensity of‘ heat spotting.It may be remarked, in passing, that the use of wider shoes and re-positioning of the brake farther into the cooling air would have enabled the Talbot to employ a textile quality. Alternatively, the use of a brake drum less liable to heat spotting would have enabled VG.95 to be used.

The excursion of the H. W.M. in post-war Grand Prix Formula II events is noteworthy, and some mention of its brake system is desirable. These cars used VG.95 on two-leading shoe Girling brakes against Al-fin brake drums. The braking performance was consistently successful, with no fade and no heat spotting.

The B.R.M. in 1951 was alone in its use of the Girling three-shoe brake. Fitted with VG.95 the brakes exhibited excellent fade resistance and resistance to judder. The latter might be attributed in part to the more uniform stresses imposed by the three equally spaced shoes.

It is clear that each Grand Prix car has its own individual braking problems, and that the improvements accomplished were due in part to improved design of brake lining material, and in part to a better understanding of the role played by the brake shoes, the brake lining, and the brake drum. It is stimulating to note that considerable improvements in brakes may yet be attained, a task to which the brake lining manufacturer, brake designer, brake drum manufacturer, and chassis engineer must all contribute in harmony and considerable measure.

Corresponding with these improvements in lining materials a good deal of work has been done in the improvement of the brake drums themselves. The Al-fin system of chemically bonding a ferrous liner into a light alloy drum has resulted in a much closer union of the two metals than was possible by any pressed or shrunk-in method with corresponding improvement in heat transfer. A further trend has been towards markedly greater width of drum, whilst the use of transverse fins on the periphery designed to act as air extractors and used by Mercedes-Benz in 1939 has been followed by drums having ducts cast into the face to achieve the same end. First used by Maserati in 1949, this arrangement was adopted during 1951 by Ferrari.

It seems likely that brake materials and brake design will change radically in the future as a consequence of the general use of disc brakes. These are already to be seen on the 1952 version of the B.R.M. and in this Girling layout small diameter friction pads are pressed caliper-like upon a disc by hydraulic means. Experimental work shows that whereas not more than 2 h.p./sq. in. of brake lining area can safely be imposed with a normal layout, as much as 14 h.p./sq. in. can be

PLATE XXVII

THE 1952 B.R.M. ENGINE

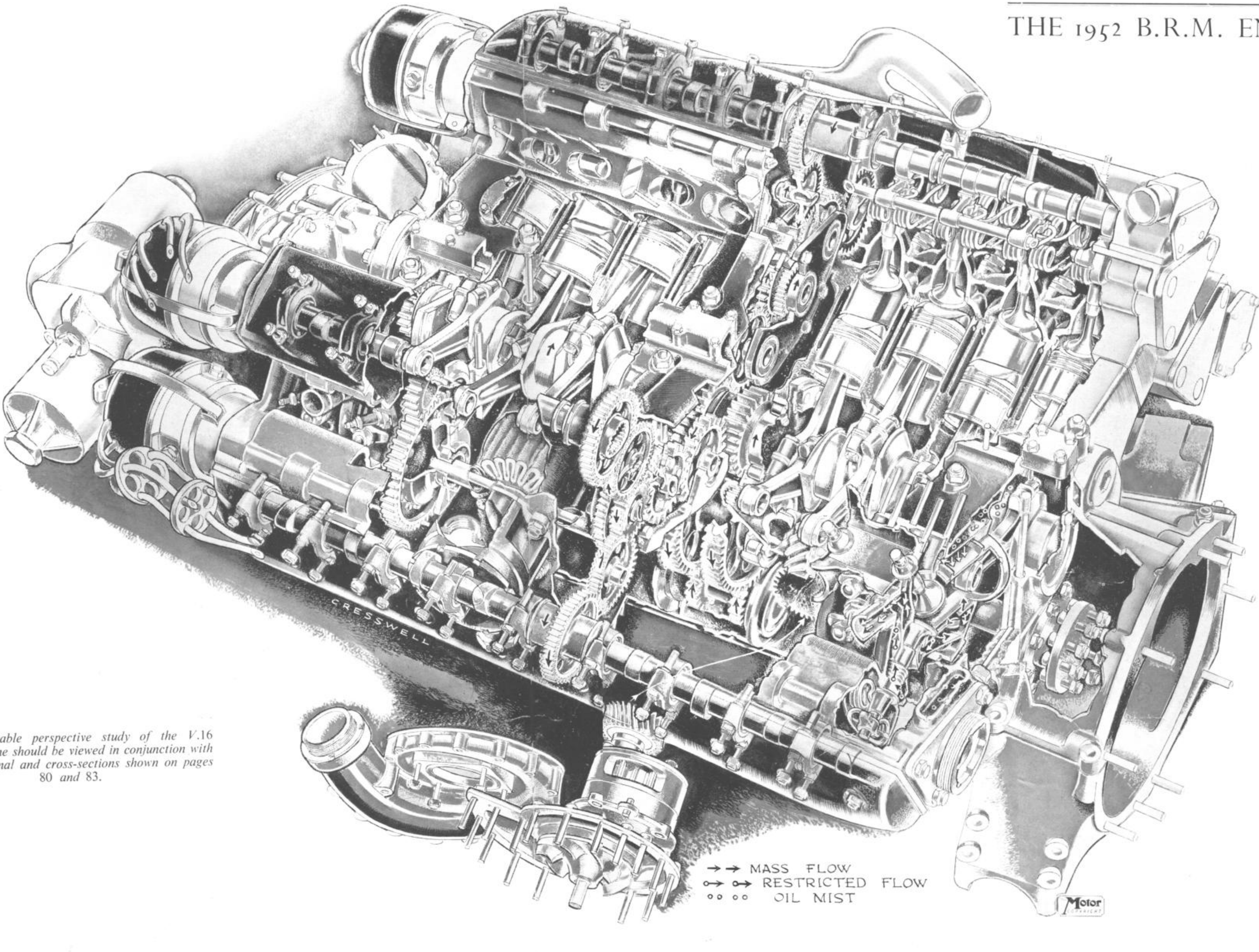

This remarkable perspective study of the V.16 B.R.M. engine should be viewed in conjunction with the longitudinal and cross-sections shown on pages 80 and 83.

extracted from Mintex friction material with a disc brake. As there is also a considerable saving in unsprung weight, and as the problems of relative expansion no longer exist, the success of this development would seem to be assured.

With reduced gross h.p. and lower all-up weight the problems confronting tyre engineers were considerably less in the post-war period than they were in the three racing seasons immediately precedent thereto. Advantage of this has been taken progressively to reduce rim and overall diameters so that the 19 in. driving wheel carrying a 7 in. tyre of 1939 has given way in many cases to 17 in. rims carrying the same section with a resulting combined saving in weight for wheel and tyre together of 69 lb. or about 10 per cent.

An experiment by Ferrari in reducing rim size even further to 16 in. was unsuccessful and led to their loss of the 1951 Spanish Grand Prix and the World Championship.

To sum up. The development of Formula I racing cars during 1947-51 has in the main followed previously tried and proven lines, but this has not prevented an increase in performance which was marked during the first four years and spectacular during the season of 1951.

A distinguishing feature of Formula II cars has been an apparent regression to four- and six-cylinder power units ; types which have not been seen for thirty years.

The desire on the part of relatively small companies to build low cost, easily maintained, engines was one of the reasons for this phenomena, but there are also technical advantages to record. Reference has already been made to the use of jet and choke assemblies individual to each inlet port. Such an installation increases power by reducing restriction in the inlet system, and, more important, offers the opportunity of obtaining a ram effect. By adjusting the length of the inlet tract to the length of the exhaust pipe, it is possible to induce waves which can result in positive pressure ducting the inlet cycle.

It is obviously easier to develop and maintain a four- or six-port inlet system on these lines than it would be with eight or twelve cylinders, and the mean effective pressure on the four-cylinder 2-litre Ferrari was 14 per cent higher than on the V.12 of the same engine capacity.

Generally speaking, the Formula II cars showed no great technical advance over their immediate predecessors, but there was a general trend to the multi-tube frame and the merits of the de Dion axle were confirmed. No novelties were to be seen in power units, but the advantages of using two sparking plants in cylinder bores of more than 75 mm. diameter were found to be most marked when using high domed pistons which almost bisected the combustion chamber.

The performance of the Formula II engine compared with the previous designs of the same capacity can be tabulated thus :

PROPORTIONS AND POWER OF UNBLOWN ENGINES 1922-1954

Car	*Cyls.*	*Bore*	*Stroke*	*Piston Area*	*b.m.e.p.*	*r.p.m.*	*f.p.m.*	*b.h.p.*
1922 Sunbeam	4	68	136	23.8	127	4,250	3,640	83
1924 Delage	12	51.3	80	38.4	130	6,000	3,150	120
1949 Ferrari	12	60	58.8	52.5	145	7,000	2,700	155
1953 Ferrari	4	90	78	39.5	165	7,000	3,800	180
1954 Mercedes-Benz	8	76	68.8	56.2	172	8,500	3,950	280

It has been recorded on earlier pages that the road speed of the 1953 cars was little inferior to the 1951 Formula I models. In 1954 we have witnessed the breaking of a number of absolute records by the Mercedes-Benz W.196 designed for the new 2.5-litre formula. These cars have created a sensation by the originality of their engine and chassis design, and by the bold introduction of aerodynamic bodies with fully-enclosed wheels, which have been used despite a weight penalty of 60 lb., and the openly expressed preference of the drivers for a view of the front wheels on the road. The company has produced alternative open wheel models so that the best choice can be made for any given circuit, but the chassis is common to both types of body.

It is not yet possible fully to describe this model but some general notes show that it opens up a new era in the design of the Grand Prix car.

The W.196 with 90 in. wheelbase and enveloping body weighs 1,540 lb. (13.8 cwt.) and the frame is constructed from tubes of either 25 mm. or 20 mm. (1 in. and 0.8 in.) with a wall thickness of 1 mm. or 0.04 in. Two large-diameter cross-tubes are placed just behind the plane of the front hubs, and the steering box, steering connections and mountings for the engine and front brakes are located on them. The front brakes have two leading shoes and light-alloy drums with an overall diameter of 14½ in. They have transverse fins, partially shrouded to increase air flow over the face of the drum, and they rotate on bearings fixed to the frame. The centres of these brakes are mounted slightly forward of the wheel centres and the connection between the two is through the medium of open halfshafts each with two universal joints. The radiator is mounted very low down at the extreme front of the tubular structure with a header tank placed

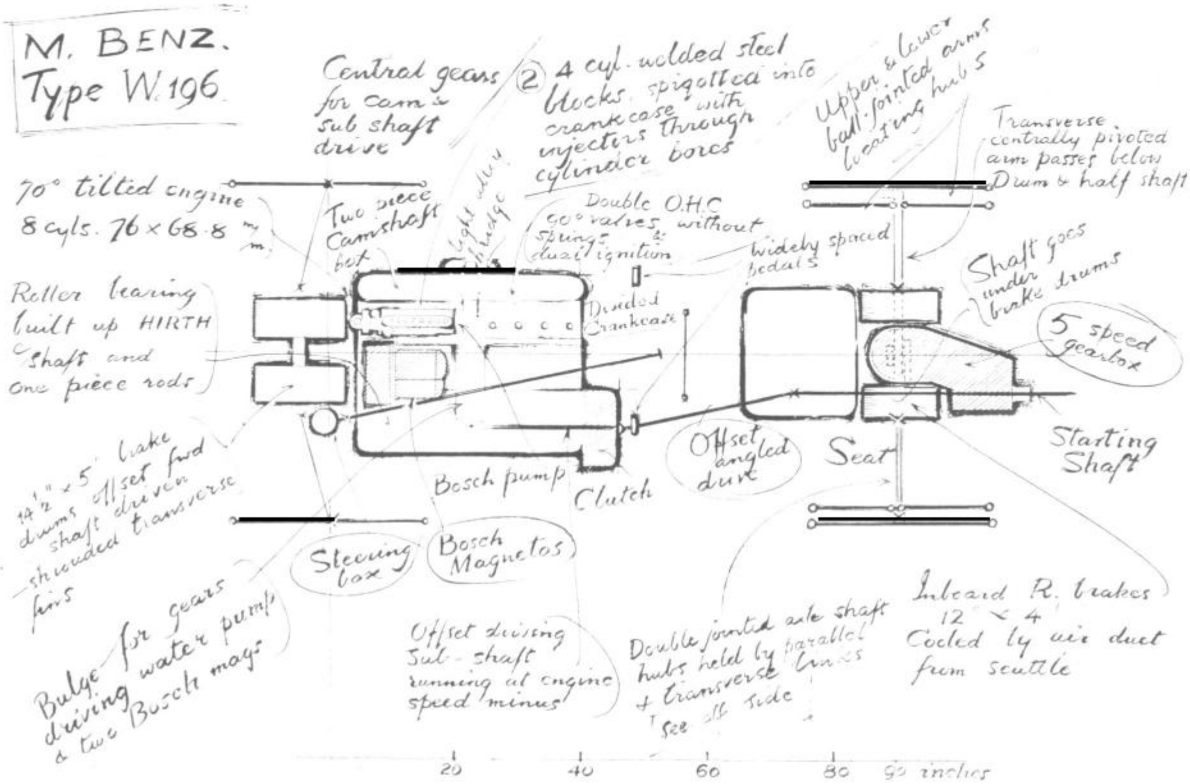

The unique general arrangement of the principal components of the 1954 Mercedes-Benz Type W196. is shown in this annotated sketch.

immediately above the brake drums. The front brakes have a shoe width of approximately 3½ in. and a drum width of nearly 5 in., the rear brakes being somewhat narrower, about 12 in. diameter, and placed on each side of the gearbox-bevel box aggregate so that all the brakes of the car are placed inboard and represent sprung weight. It is worth noting that although the 1922-3 Benz six-cylinder 2-litre racing cars had inboard brake drums at the back and the 1926 Alvis 1½-litre cars inboard drums at the front (with front wheel drive) this is the first time that such a system has been used in a Grand Prix car, although a similar layout was adopted by Lancia with their Mille Miglia and Pan American sports/racing cars in 1953.

The front suspension of the W.196 is of conventional wishbone design with all parts machined from the solid as is traditional Unterturkheim practice, exemplified as long ago as 1914 by the construction of one-piece crown wheels and halfshafts on the Lyons Grand Prix cars, there being a total of fifty such units prepared for the team.

This apparent lavish expenditure of material and man-hours is determined by the belief that anything which will secure reliability by eliminating the risk of welding or riveting is worth while.

The engine is mounted with the cylinder axes at 70 degrees immediately behind the front brake drums, and is a most interesting blend of old and new engineering practice. A choice of eight cylinders in line has caused considerable comment in view of the world-wide trend to the V.8 configuration, and the considerable experience obtained with this type by Mercedes-Benz with their W.165 1½-litre model of 1939. A 2½-litre unsupercharged V.8 was, in fact, projected for the new formula, but rejected whilst in the paper stage on the grounds of excessive weight, largely caused by the duplication of the auxiliary drives. Having decided not to use four cylinders face to face, as it were, it was decided to adopt the alternative of placing them back to back so that although the cylinders are in line they are in two blocks of four separated by a train of gears which drives the camshafts within one-piece valve covers with further gearwheels driving a subshaft which would conventionally lie beneath the crankshaft, but which does in physical fact lie beside it.

The cylinder construction has the bores and combustion chambers made in one piece from steel forgings and welded together in groups of four, with the ports welded in on top of the hemisphere and subsequently surrounded by a welded-on steel-sheet water jacket. This arrangement has been used on all Mercedes-Benz racing cars since 1914, but the new engine has two valves per cylinder inclined at 90 degrees in place of the normally used four valves at an included angle of 60 degrees, and, most remarkable of all, the valve gear does not include valve springs. On two previous occasions the Mercedes-Benz racing department has tried to eliminate these components which on a high r.p.m. engine take up a lot of space better devoted to other purposes if they are to be reasonably reliable. In their place a return cam is used to bring the valve very close to the seating, gas pressure being relied upon to effect the final seal. This does not end the novelty of the engine design, which includes direct fuel injection using components similar to those standardised on the catalogue 300 SL model. Whereas, however, on the sports car injection is made into the combustion chamber, on the racing car with far higher explosion pressures and temperatures the nozzle is shrouded by being placed in the cylinder bore so that it is masked by the piston at the moment of ignition.

Air is supplied to the inlet ports through a large-diameter pipe, the absolute pressure of the ingoing air being determined by a throttle placed ahead of the front cross-member through which the pipe passes. This must be the only car in which the throttle assembly is fixed to the frame.

The Stuttgart engineering staff are no strangers to fuel injection, and a project for such an installation on their pre-war V.12, 3-litre, supercharged power unit has been mentioned in Example 17, Volume I. So also has the use of the straight-eight layout, for the Mercedes-Benz racing engines of 1924 and 1934-7 were so constructed. These all had one-piece crankshafts running on roller bearings with split big ends for the connecting rods with split cages for the rollers. The W.196 reverses this practice, having one-piece connecting rods and a built-up Hirth-type crankshaft.

Assuming that the problems of a springless valve gear would not have been tackled unless maximum crankshaft speed of about 10,000 is envisaged, and that a revolution range of 5,000 r.p.m. was required, difficulties present themselves in respect of crankshaft torsional vibrations, but these are virtually eliminated by the use of central driving gears to a subshaft which drives the clutch at rather less than crankshaft speed.

Using drawings of past Mercedes-Benz engines as a guide, it is possible to make an approximate scale drawing of the power unit, and its situation within the frame, and this shows how the clutch itself is set well to the left-hand side of the car, power being then taken through a two-piece propeller shaft, the second section of which passes beneath the inboard rear brake drums and enters the five-speed all-indirect gearbox which is placed behind the rear axle centres. It will be noted that the engine is started by a shaft which engages with an extension of the gearbox, there being obvious difficulties in threading a starting shaft through the inboard brake mechanism at the front end of the car.

Power is transmitted from the gearbox through a limited-slip differential to halfshafts with double universal joints, and the hubs are located by a unique system of links.

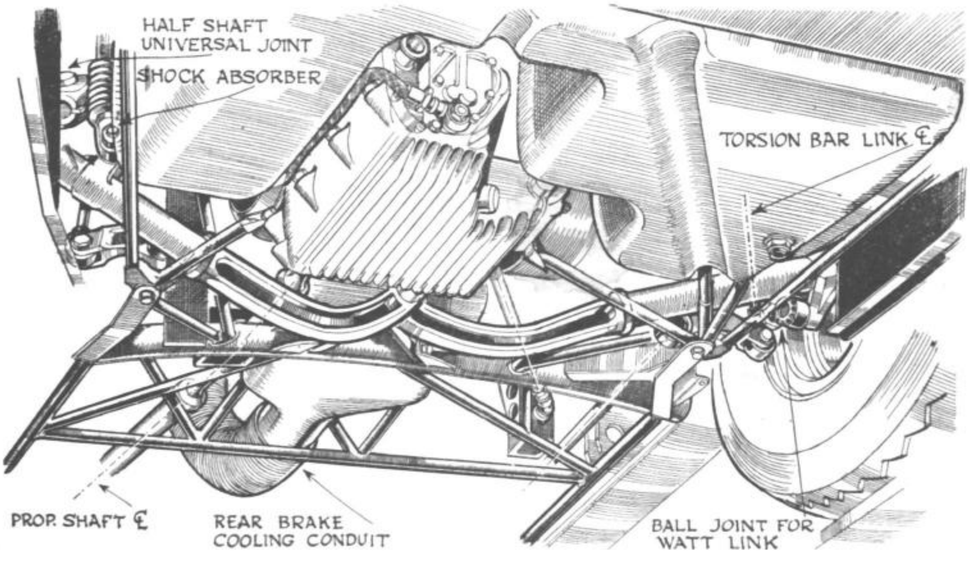

The rear-axle layout of the Mercedes-Benz, Type W. 196, is of great interest for it is of modified swing axle type. As shown here each open halfshaft has two joints and the hubs are located by pivoted arms giving a low rear roll centre.

It is a matter of exceptional interest that Mercedes-Benz abandoned the de Dion axle for their 1954 new cars. In its place they located the rear wheels transversely by two single arms which pivot on the centre line of the car (and therefore have a longer effective radius than a simple swing axle) and also around a plane about 6 in. from the ground, this exceptionally low centre providing a corresponding reduction of rear roll couple. These swing arms are not subject to bending moment, for the hubs are located fore and aft by two rods of equal length, one of which is placed above the wheel centre and runs backwards, and the other below the wheel centre and runs forward. It is a characteristic of this survival of James Watt's ingenuity that the resultant travel of the hub centre is vertical, but the wheel is, of course, subject to changes in camber angle, which are accommodated by ball joints. A separate arm with a rubber bush is used to link up with the longitudinal torsion bars and a direct-acting hydraulic damper.

Similar elements are used at the front end of the car and the rate of the springs is such as to provide much softer suspension than has been seen on any other post-war racing car, with the possible exception of the G-type E.R.A.

It has been found that the streamlined shape gives better than usual stability in cross-winds. The underpart of the car is unbroken except for the base of the gearbox, and the overall form has been developed at the Stuttgart Forschungs-institut für Kraftfahrwesen und Fahrzeugmotoren, in a wind tunnel which is sufficiently large to accommodate complete cars with wind speeds of 150 m.p.h.

It seems appropriate to end this chapter, and to close this book, with this description, even in broad terms, of one of the fastest road racing cars the world has yet seen, constructed by the makers of the first successful petrol-propelled vehicles which the world saw.

As he surveys the span between these events it is the writer's hope that this book will serve a useful purpose in acting as a guide to the engineering aspects of racing car design, and as an *aide memoire* to the development thereof over the past fifty years. He ventures also to suggest that to engineers and enthusiasts knowledge of the past may be of some service in predicting the future, and to conclude with the advice given to his students by Sir John Soane : " We must not only be intimately acquainted with what the ancients have done, but endeavour to learn from their works what they would have done. We shall thereby become Artists, not mere Copyists ; we shall avoid servile imitation and, what is equally dangerous, improper application."

PLATE XXVIII

BEFORE BORDEAUX. — "By 1903, performances had increased to the point where Gabriel averaged 65.3 m.p.h. over 342 miles between Paris and Bordeaux, and, although the roads were liberally policed, spectators were permitted to stand on the edge of the road over the entire racing distance"

Here Gabriel is seen just before finishing and winning the last great Town to Town Race.

PLATE XXIX

FAST GOING.--" Against these adverse,factors in early racing may be set the comparative absence of corners in relation to the total circuit length. This was particularly marked in the case of the 1906 Grand Prix, for after having covered six miles from the stands, the drivers turned left round the 130 degree bend, and then set off down the straight. Apart from a slight kink in the village of Ardenay, this straight certainly deserved the name, for the cars could be held flat out for the ensuing twenty-one miles!"

Here is Gabriel on a De Dietrich flat out on a straight of rather lesser length on the 1906 Ardennes Circuit.

PLATE XXIX

HARD LABOUR. — " It was general practice to stop at the replenishment depot every lap and make good the tyres which had been changed during the preceding circuit, and as many as four spares were carried by some of the cars. From all this it will be seen that the riding mechanic's job was no sinecure."

Carl Joerns and his mechanic stop for a left-hand rear tyre change in the 1908 A.C.F. Grand Prix ; a Renault passes them.

PLATE XXXI

HEROIC POSE. — " With the rise of professional skill it was natural that the professional virtuoso should come upon the scene . . . Georges Boillot, an employee of Peugeot, made himself the idol of the crowd before the 1914-8 war, and he achieved his position not only by his skill at the wheel, but also by his undoubted gift of capturing the imagination of the public."

Here Boillot is seen just after winning the 1910 Sicilian Cup.

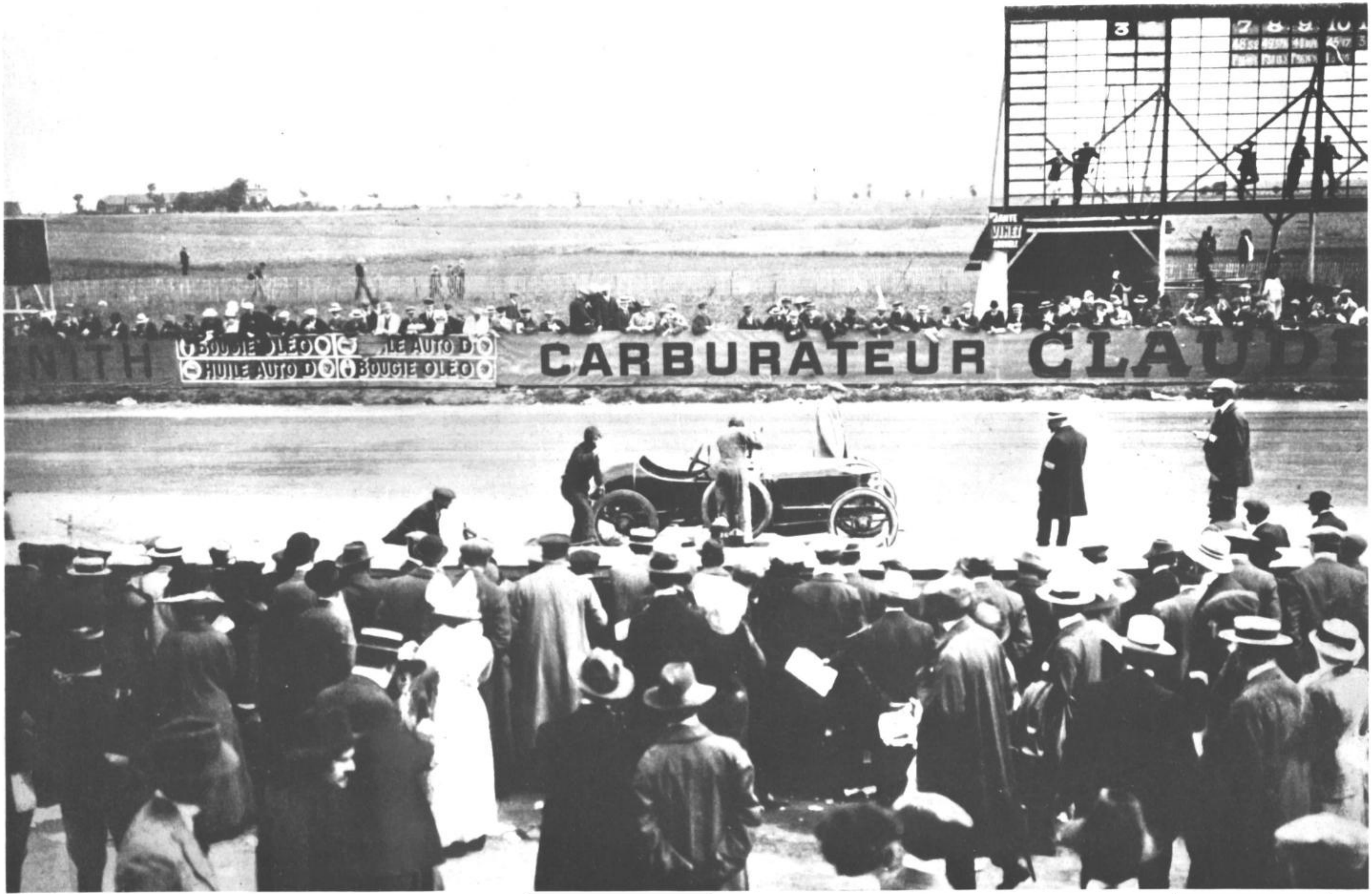

PLATE XXXII

COMING OF AGE.--" Aesthetically, as well as mechanically, the 1912 Grand Prix at Dieppe was a dividing point, for whereas the big cars, exemplified by Peugeot and Fiat, retained the earlier tradition, the 3-litre models, as typified by Sizaire-Naudin, Sunbeam and Vauxhall, had pleasingly proportioned bodies giving full protection to the occupants."

A.J. Hancock replenishes the 3-litre Vauxhall at the pits in the 1912 A.C.F. Grand Prix after completing three laps of the 48-mile circuit.

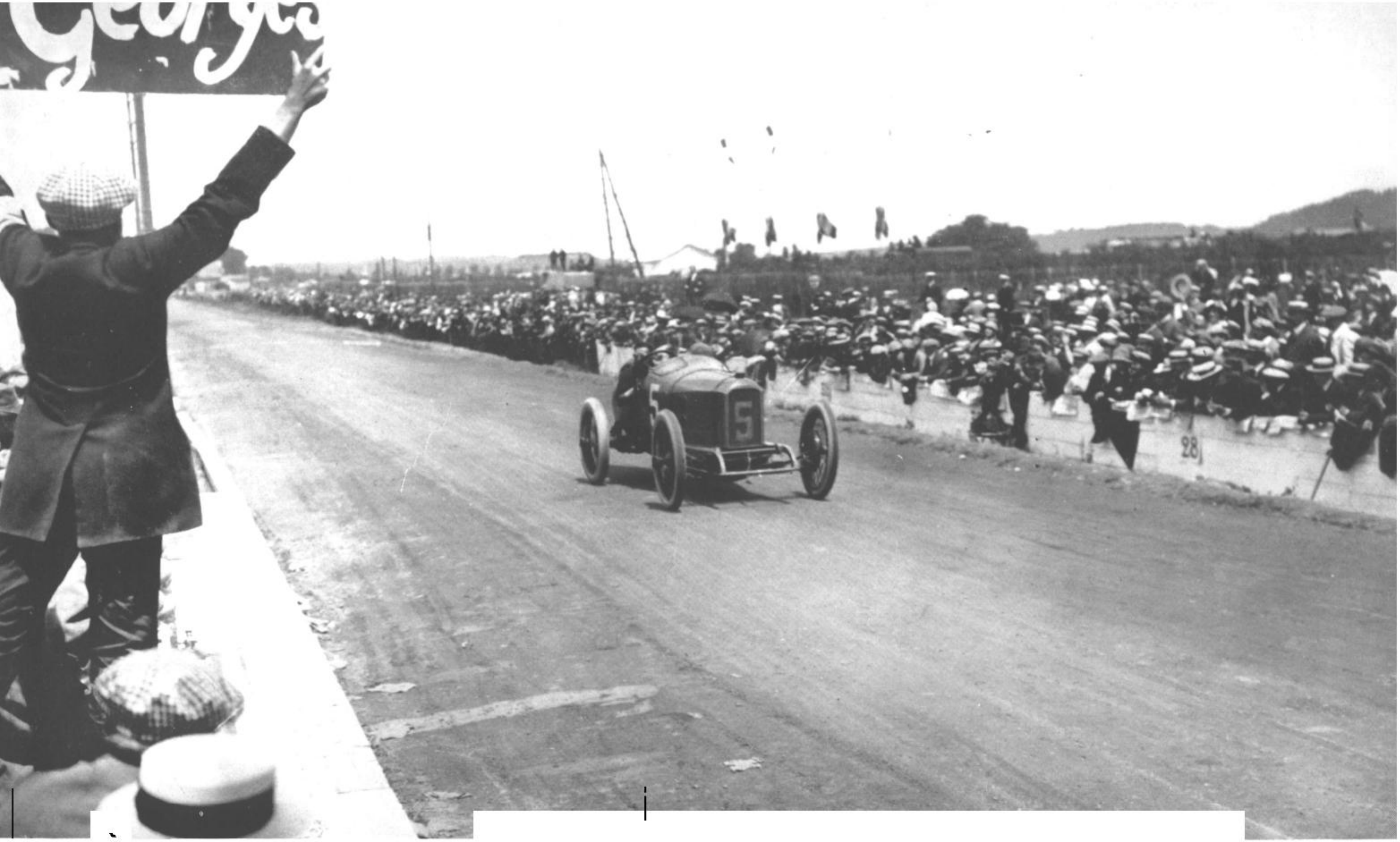

PLATE XXXIII

HEROIC DEFEAT. — " Boillot had left the line five and a half minutes before his pursuer, Lautenschlager. Thus, although he lost the lead on the eighteenth lap, this fact could not be signalled to him until, having completed the nineteenth circuit, he passed the pits on his way to the last round, in which after six and a half hours of desperate struggle he broke up his engine when only fifteen miles, from the finish, and was not ashamed to weep. "

The Peugeot pit reverses a signal to inform No. 5 that with one lap to go in the 1914 Grand Prix the position is " $2^{ème}$ Georges ".

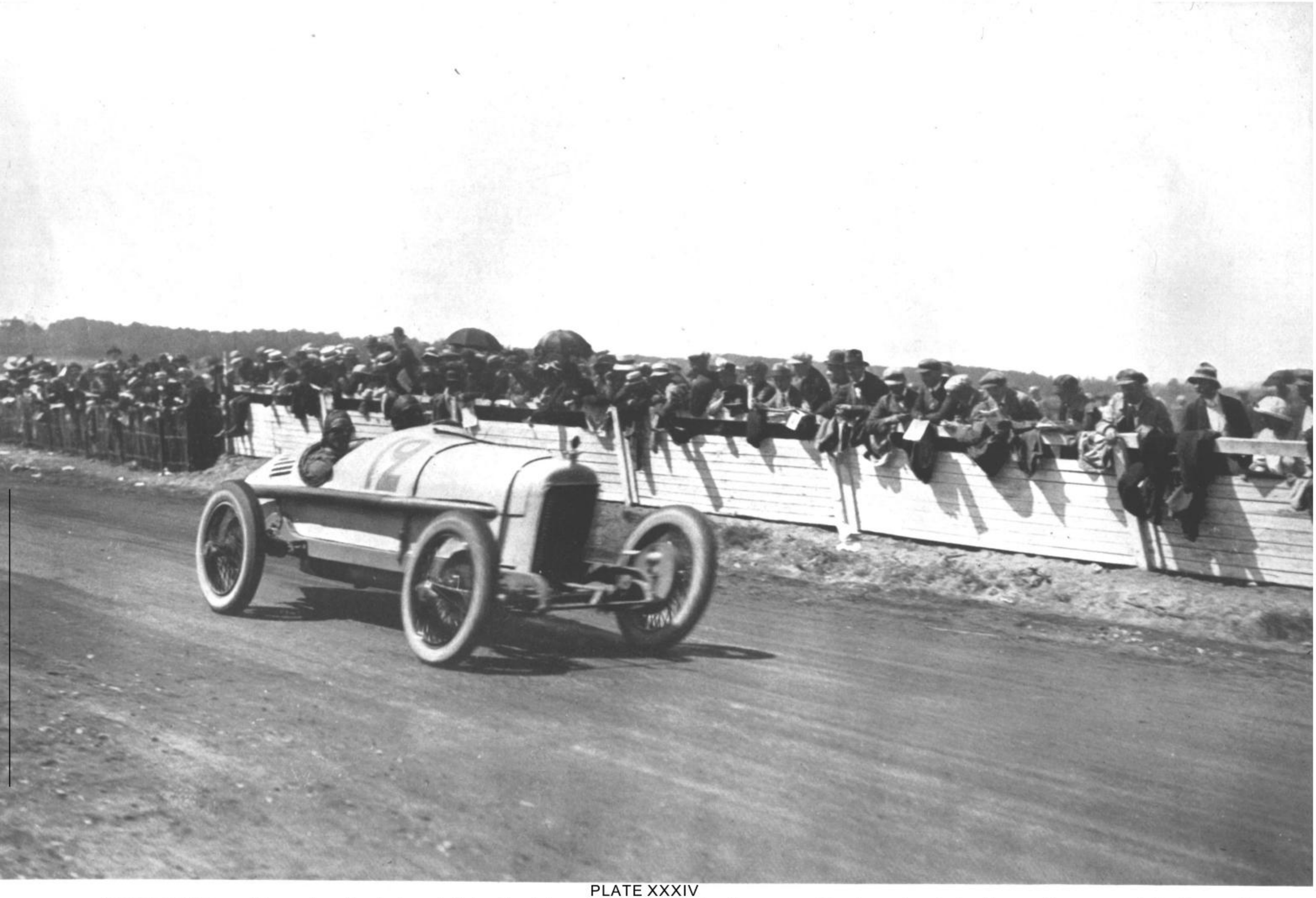

PLATE XXXIV

ROCKY ROADS. — " Even when the dust was laid by oil, calcium, or in the end by tar, it was normal for the surface to break up on the corners during the event, and in some cases on the straight also. This was particularly apparent in the 1921 Grand Prix at Le Mans, in which a number of cars were forced to retire by stones penetrating radiators, sumps and tanks, and one of the American Duesenburg team, Joe Boyer said : ' Hell, boys, this ain't no race, this is a stone-throwing competition'."

Jimmy Murphy on the Le Mans circuit in 1921 when he drove the first eight-cylinder four-wheel-braked car (a Duesenburg) to win a road race.

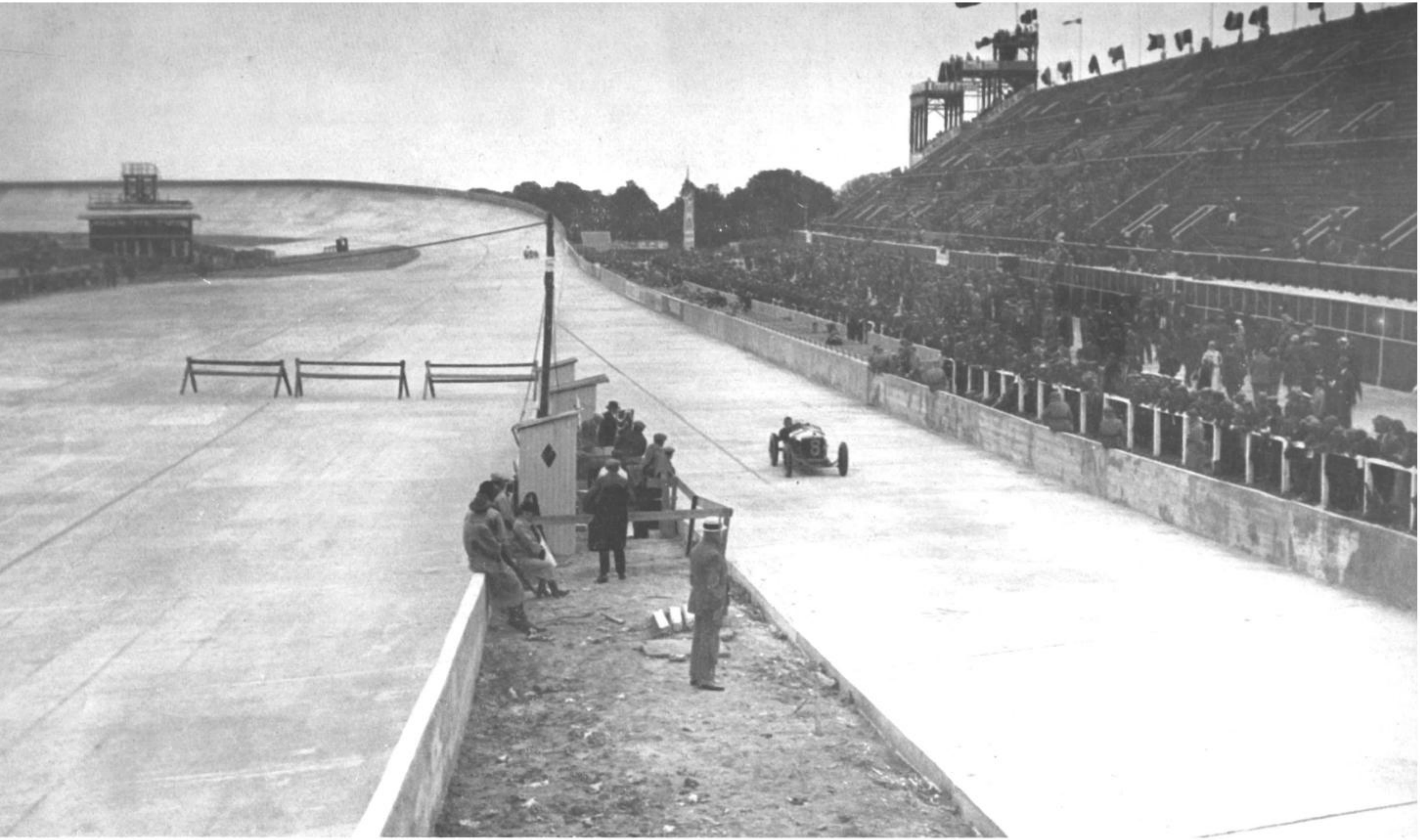

PLATE XXXV

WIDE OPEN SPACES. — " The advantages of these private courses were obvious. The road surface was used only for racing, the grandstands, pits and other installations were permanent, and their capital cost could be amortised over many years, a wide variety of corners, and in some cases gradients, could be introduced, and, perhaps even more important, everybody wishing to see the race had to pay for the privilege. Only the Nürburg Ring, however, turned out to be a business proposition, for both Montlhery and Monza (not to mention the now-forgotten Sitges in Spain and Mirimas near Marseilles) proved to be too perfect and, lacking spectacular appeal, attracted relatively few spectators."

A. Ascari (father of the 1953 World Champion) driving his 2-litre Alfa Romeo past the empty grandstands in the A.C.F. Grand Prix of' 1925. It was in this race that he was killed, on the twentieth lap.

PLATE XXXVI

TOUGH TEST. - " There was a general decline of interest in Grand Prix racing in the late 'twenties, a period in which the eyes of the world were, undoubtedly, focused upon the Targa Florio as being the supreme test of the racing car. On this wild and mountainous circuit, the highly developed cars, like the twelve-cylinder Delage which, with 200 b.h.p., was the most powerful racing car built before 1932, were at a hopeless disadvantage, and for four consecutive years victory was achieved by the lower-powered, but better balanced, Bugattis."

Divo is shown driving the Delage on his first lap in 1926; this team was withdrawn following the crash and death of Count Masetti at the wheel of a sister car.

PLATE XXXVII

ROUND THE HOUSES. –" In the early 'thirties the first round-the-houses race sprang into popularity, this being on the Monte Carlo circuit, of only 1.98 miles, and here again Bugatti was supreme, although challenged with some success by Alfa Romeo. Circuits which limited average speeds to under 50 m.p.h. were, however, so specialised that they could not satisfy the broad demands of Grand Prix racing and some financially viable alternative became a technical necessity."

Varzi is driving a Type 51 Bugatti into third place in the 1931 Monaco Grand Prix which was won by his Monagesque team mate, Louis Chiron.

PLATE XXXVIII

CONTEMPLATION. - " Looking back, if 1924 bears the label 'Exit the Riding Mechanic', then 1934 could properly carry the directions 'Entry of the Specialists'. A typical example was Dietrich, of Continental Tyres, who would make the most accurate measurements of tread wear and road temperature in order to advise on tyre sections, tyre pressures and patterns of tread."

Dietrich measures the tyre marks of a Mercedes-Benz on the Spa circuit before the 1935 Belgian Grand Prix.

PLATE XXXIX

CELEBRATION. – " It became increasingly important to achieve maximum publicity for the win. For this reason Press relations were based on a lavish budget which made possible not only champagne parties to meet the drivers after victory, but also extremely informative and well-produced 'hand-outs' distributed before the race, and an ample supply of photographs and other souvenirs after it.

Caracciola after winning the Belgian Grand Prix of 1935 on a 4-litre Mercedes-Benz.

PLATE XL

OVER THE TOP. - " Nor is it likely that we shall see in the future cars so difficult, indeed dangerous to drive, as those built in 1936 and 1937. In effect, only two drivers, Caracciola and Rosemeyer, mastered the problems posed by over-steering cars with a laden weight qf 22 cwt., and an engine output of 600 b.h.p., and between them they won fifteen of the seventeen major races of these two years.

Manfred von Brauchitsch goes over the hill at Donington Park in 1937 on the 5.66litre Mercedes-Benz in which he made the fastest lap.

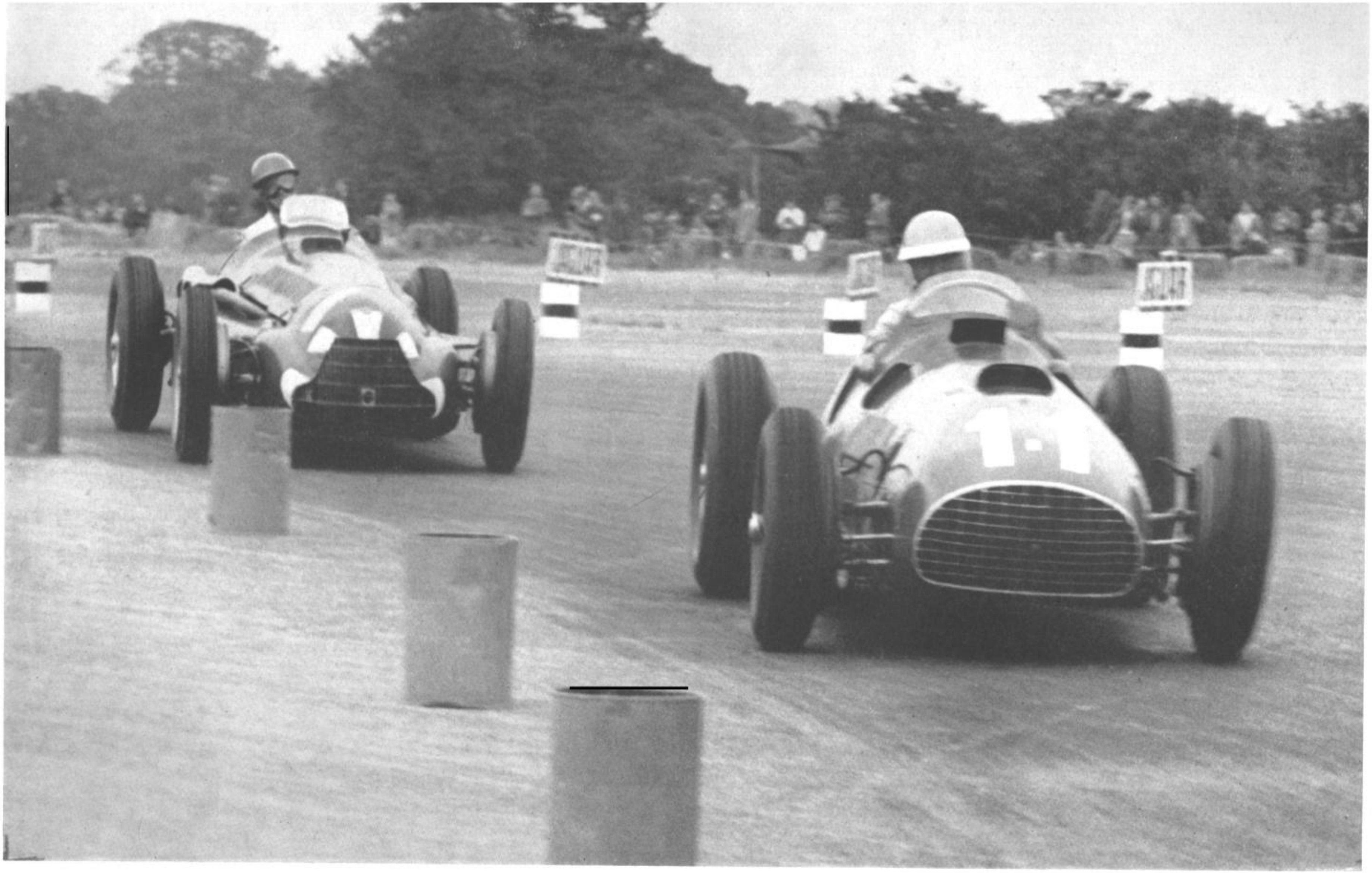

PLATE XLI

SMOOTH STYLISTS. – " Nuvolari pioneered the modern driving position with shoulders and head well back, and arms stretched forward to a rather remote steering wheel.Dr. Farina has popularised this style in the post-war period and we now see the antithesis of the jockey-like crouch as drivers drift their cars on a smooth, predetermined cornering line, leaning right back, and with their eyes, in some cases, raised to heaven."

Here Farina (World Champion, 1951) pursues Ascari (World Champion, 1952-3) in the R.A.C. Grand Prix of 1951. Both drivers have their cars (the 4½-litre Ferrari leading, and the 1½-litre Alfa Romeo) in the four-wheel drift which has done much to raise lap speeds in the post-war period.

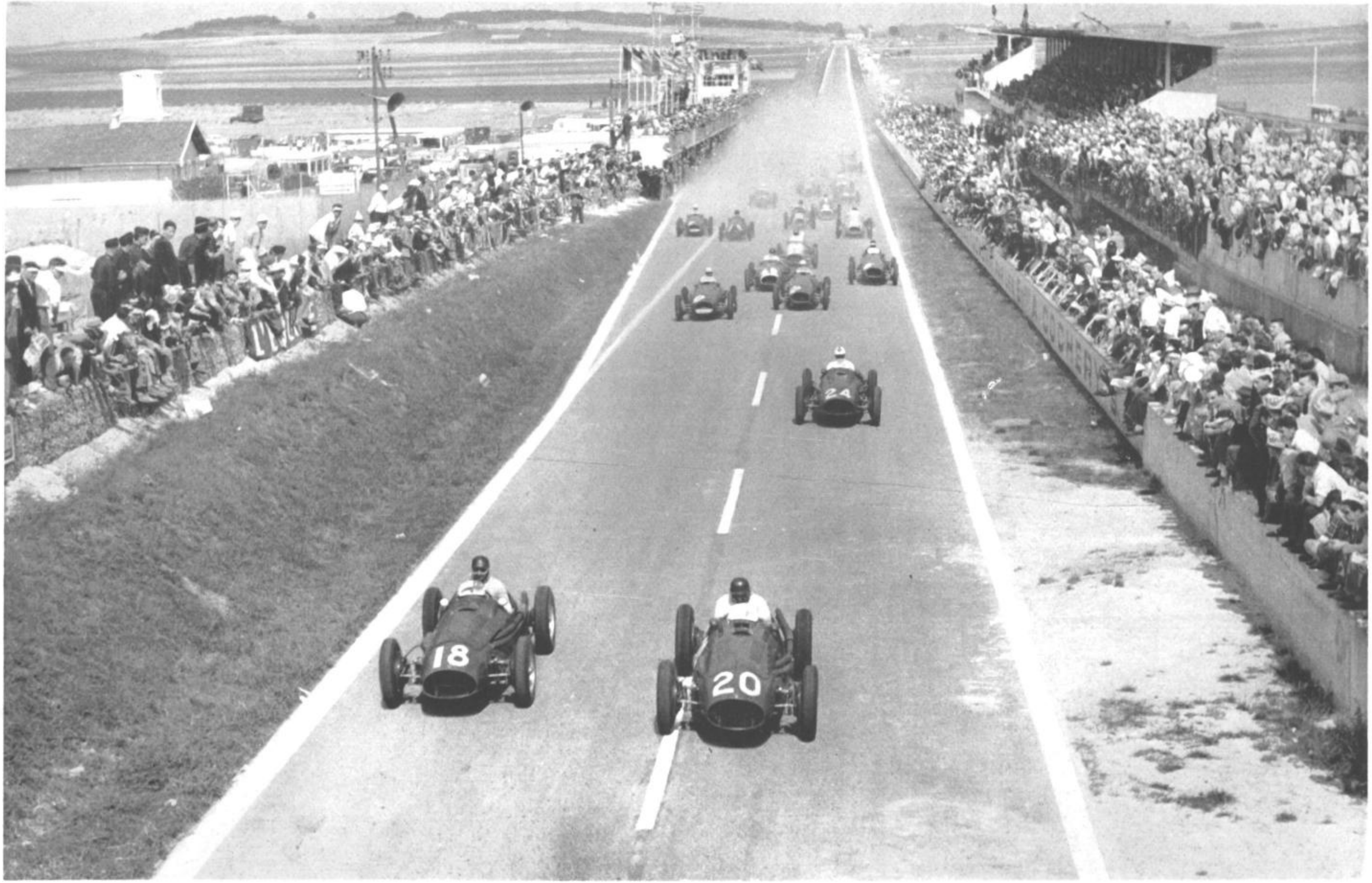

PLATE XLII

THE RIGHT IDEA.--" Permanent success has attended the concept of a permanent road circuit, at Spa since 1925, at Rheims from 1928, at Berne from 1934 and, since the 1939-45 war, in a number of other localities. Here the public sees real road racing, and at the same time the installations remain standing to serve from year to year."

The public mass to see the 2 litre Formula II cars start in the A.C.F. Grand Prix of 1953 at Rheims. The Maseratis of Gonzales (No. 18) and Fangio (No. 20) get away first.

PLATE XLIII

PRESENT GLORY. – " The skill and the courage of the real masters such as Ascari, Fangio and Farina has certainly matched, and may well have exceeded, that of any previous drivers, and we can be absolutely sure that we enter a period in which Grand Prix racing cars will travel faster than they have ever done before."

Fangio is driving the W.196 Mercedes-Benz round the Südkehre on the way to victory in the 1954 European Grand Prix staged at the Nürburg Ring.

POSTSCRIPT

THAT persistent, perspicacious, and sometimes obstinate critic, Lord Charnwood, who was actively engaged in the design and construction of racing cars in the mid-'twenties, has often told me that one of the worst features of *The Grand Prix Car* (First Edition) was a tendency to be wise after the event, to judge designs built at differing periods in the light of present-day knowledge and materials, and thus by inference unfairly to criticise earlier engineers.

There may be some justice in his point of view, and it may perhaps be accounted an even more serious weakness that throughout the text as it has previously appeared, racing cars have been reviewed as isolated examples of automobile engineering technique, whereas it may reasonably be contended that they were only tools to achieve certain ends.

If this argument be accepted it becomes necessary to know more about the background to Grand Prix, racing ; why, for example, it has been steadily supported by manufacturers over a period approaching half a century, what was the nature of the circuits over which the races have been run, the type of drivers, and their technique of handling racing cars, the influence of team control and pit work and last, but perhaps not least, the influence of engineering considerations on the aesthetic aspect of the racing car. I have, therefore, resolved briefly to deal with some of these matters in a Postscript and feel that in so doing a change from the impersonal style to a rather more direct narrative may be appropriate in view of the nature of the material. To start, then, with the most important matter, let us consider the financial forces which have supported Grand Prix racing during the past fifty years.

The first three races organised as " Grand Prix " by the Automobile Club de France (in 1906, 1907 and 1908) were all run under different rules, but were all staged with the same purpose. This was to prove to the world that France not only led in the quantity production of motor cars, but also built the fastest and safest cars in the world. The idea of using motor racing as the expression of a politico-industrial idea had originated with the Gordon Bennett series, held between 1900 and 1905, but the continuation of the same theme by the French Club was not a particularly successful enterprise, for after Renault had won in 1906, Fiat and Mercedes were victorious in 1907 and 1908. The temporary collapse of Grand Prix racing in the years 1909, 1910 and 1911 was, however, not entirely due to the natural disappointment of the French organising club. Finance also played a part, and the following statistics, in which I have multiplied the contemporary cost by three to present a fair picture to the modem reader, may be of interest.

In the first Grand Prix of all, the A.C.F. spent the equivalent of £60,000 in preparing and barricading the course, making two by-passes and erecting various structures, including revenue earners, such as the grandstand. Over forty miles of pallisading were put up and the cost of repairing the road surface and attempting to make it dust-proof alone amounted to £6,500 The Club obtained revenues amounting to entry fees of £20,400, a grant from the civic authorities of Le Mans, £12,000, and subsidies from hotel keepers, £3,000. On the morning of the race, therefore, they were out of pocket to the tune of £15,600. It was expected that this would be more than made good by gate money, but the only revenue from this source was seats in the grandstand, and the revenue here was only £4,800, whereas the stand itself cost £7,200 to put up. In round figures, therefore, the first Grand Prix cost the organisers about £10,000 in modern money.

So far as the entrants were concerned, it was, at the time, estimated that a team of three cars with spares, mechanics, etc., would cost about £75,000 in modern money, and with eleven teams the investment of the industry in this event represented roughly three-quarters of a million pounds.

None of the cars would be used for subsequent events, and but a small fraction of this would subsequently be recouped by the sale of cars to private owners.

In view of these figures, it is scarcely surprising that by 1908 both the organisers and the supporters of Grand Prix racing had decided that the benefits obtained were not worth the expenditures involved.

The revival of Grand Prix racing in 1912, and its rise in popularity to the point where it was supported by fourteen manufacturers in 1914, was due to the fact that newly established companies calculated that the expenditure of even these large sums would give them a really worthwhile return in the event of success. This expectation was based on selling and economic conditions far removed from those of the present day. We must picture a world in which automobile buyers were critical, knowledgeable, and few in number ; indeed, in 1912 the whole output of British industry amounted to only 23,000 vehicles. Despite this, very considerable profits could be earned and, for example, after paying for three cars in the 1913 French Grand Prix, the Sunbeam Motor Co., with a capital of only £120,000, made a net profit of £94,909 2s 3d., the equivalent of, say, £300,000 in modern money. The possibility of making racing pay can be seen from the fact that the Sunbeam profit was trebled between 1910 and 1912 and increased by nearly five times between 1910 and 1913, the very years in which they most prominently engaged in motor sport.

In the post-World War I era, Sunbeam were one of the few companies who continued in the belief that Grand Prix racing was a worthwhile financial investment, and they regularly allocated the equivalent of some £100,000 per annum in modern money to this end. The trend of events was, however, working against both them and their racing rivals and within six years from the re-establishment of Grand Prix racing after World War I, factory support virtually ceased. Between 1921 and 1927 the market for cars in these years had become immensely widened (the British output for 1926 being 198,000 vehicles), whilst the margin of profit shrank to such an extent that the smaller companies found it exceedingly hard to remain in business and impossible to contemplate the kind of expenses involved in Grand Prix racing. Thus, in 1925, the declared profit of the S.T.D. Company which included Sunbeam, amounted to £151,089 19s 6d., but whereas the 1913 £95,000 profit was earned on a capital investment of £120,000, in 1925 the £151,000 was the return on an issued capital of £3,224,408. The profit ratio had thus declined from 15s. 9d. down to 9½d. on every £1 invested. These were typical, not exceptional, conditions in which factory support of Grand Prix racing became an unjustified luxury.

By 1928 economics had transformed racing to the extent that the financial relations of organisers and entrants became reversed. Instead of the competitors providing funds for the organisers, the responsible club now had to subsidise the runners by the inducement of adequate prize money and, in due course, by the substitution of starting money for the traditional entry fee. Bugatti and Maserati, it is true, found it worth while to build special cars for sale to the private entrants, but although there may have been by-products of racing in improved design, prestige of the marque, or national benefit, the point of primary importance was now established. Motor racing had to attract a sufficiently large crowd to make it a profitable proposition, or cease to be. Simultaneously, a multiplication of races became a matter of necessity from the competitors' point of view.

The cost of a season's racing, allowing for wear and tear of the car, and the need to replace it, say, every second year, mechanics' salary, fuel costs, living expenses when actually engaged in racing for, say, three people, amounted to between £5,000 and £8,000 per annum, and even with subsidies from the fuel and tyre companies, a man would have to secure the starting money from at least ten races in the year if the financial burden were not to be crippling.

In these circumstances it was natural that the great national Grands Prix of France, Italy and Spain, etc., should diminish in importance compared with the newer fixtures on the calendar such as Marne, Monaco, Alessandria, Tripoli, Coppa Ciano and Coppa Acerbo.

Between 1928 and 1932 it became common to have between ten and twelve major races each year and, assuming that there was an average attendance of 50,000 persons per race (probably an underestimate), perhaps half a million people each year were witnessing a spectacle that four years before had been observed by barely a fifth of this number. In these circumstances, the Alfa Romeo Co. decided that they would be commercially justified in producing and running a team of specially designed cars, and the introduction of the P.3 model for the Italian Grand Prix of 1932 marks the beginning of a pendulum swing back to the works-prepared team. This move was not made solely upon commercial grounds. In the early 'thirties, Il Duce saw in motor racing a means of continuing the enthusiasm of the Italian populace for the Fascist regime, and of extending Italian prestige abroad. Alfa Romeo thus became the chosen instrument of a political ideology, and with the rise of the Nazi party to power in Germany, it was not to be expected that the palpable success of Mussolini's plan would go unnoticed, especially as the Führer was a genuine motor racing enthusiast, The spirit in which both Auto Union and Mercedes-Benz were urged to engage in Grand Prix motor racing under the 1934 (*et seq.*) 750 kg. Formula may be appreciated from an extract from a German publication, *Mannschaft und Meisterschaft.*

"The Führer has spoken. The 1934 Grand Prix formula shall and must be a measuring stick for German knowledge and German ability. So one thing leads to the other ; first the Führer's overpowering energy, then the formula, a great international problem to which Europe's best devote themselves, and, finally, action in the design and construction of new racing cars."

The two companies were allowed to offset the costs of racing against rearmament contracts, and from 1934 to 1939 all previous financial bounds were far exceeded. A joint expenditure, amounting in terms of modern money to at least £1 million per annum, was incurred and, with these unprecedented resources, the racing car reached an all-time peak of technical perfection. Simultaneously, opposition to the German cars withered and died, and from a national prestige point of view, the teams were winning somewhat hollow victories just before the struggle was transferred to the Field of Mars. To sum up, when Grand Prix motor racing was for a second time suspended by *force majeure,* it had been through five distinct cycles which may be tabulated thus :

PERIOD A : Years 1906, 1907, 1908

Support mainly based on reasons of national prestige with wins by France, Italy and Germany in successive years.

PERIOD B : Years 1912, 1913, 1914, 1921, 1922, 1923, 1924, 1925, 1926, 1927

Grand Prix racing entered by individual manufacturers as a commercial proposition offering the prospect of increased profits. This phase reached a peak in 1914 and company support dwindled rapidly, to two only in 1927.

PERIOD C : Years 1928, 1929, 1930, 1931

Extension of major races from three or four per annum to ten or twelve per annum, supported mainly by amateur owners prepared to pay for their sport, or professional drivers seeking to earn a living from bonuses, starting and prize money.

PERIOD D : Years 1932, 1933

Fascist support for motor racing with State encouragement for the Alfa Romeo team.

PERIOD E : Years 1934, 1935, 1936, 1937, 1938, 1939

Substantial Nazi support for motor racing with Auto Union and Mercedes-Benz as chosen instruments, leading to overthrow of financial limitations and the co-ordinated use of Grand Prix racing as a means of developing national authority and exports.

Looked at from the above viewpoints, the engineering consequences of Grand Prix racing sink into the background, but a predominant factor in every period has been the presence of a large crowd of spectators. This aspect of a large gate was of particular importance in Period C, when the field for each race was drawn from individuals who were financially dependent upon the organising clubs.

In post-war European motor races the cars have been slightly slower than the pre-war models ; inter-marque competition has, if anything, been less pronounced than in the days of Mercedes-Benz and Auto Union ; and, as Italian cars predominated, there has been no international rivalry. Nevertheless, the current popularity of Grand Prix racing is such that it attracts the public in a manner never known before. There are three prime reasons for this. One is the greater spread of technical education and mechanical consciousness through the communities of Western Europe, another, the very low figures of unemployment, with a widespread redistribution of wealth, which has raised the real living standards of most people and last, but by no means least, the development of public address news and race commentaries, so that all the spectators are constantly informed of the progress of events, from the fall of the starter's flag to the display of the chequered flag.

Radio broadcasts and, more recently, television have also played a prominent part in relaying racing car successes to the world at large.

For these reasons success in racing has become far more important; commercially, to the fuel and component manufacturers who supply the owners and builders of racing cars than it has to these people themselves. For example, racing successes have not led to any substantial sale of Ferrari and Maserati cars, and it is arguable whether they have greatly increased the output of Alfa Romeo. Fuel and oil companies have, however, used these cars as vehicles for considerable publicity for their products, and this also applies to such items as tyres, sparking plugs and brake linings. The suppliers have, in fact, found it economical liberally to support successful racing car constructors.

Simultaneously, large crowds have made it possible for race organisers (amongst whom the *Daily Express* has been largely responsible in England) to underwrite big sums for starting and prize money. We can, therefore, add to our summaries :

PERIOD F : Years 1947 to date

Grand Prix racing run as a financially self-supporting public spectacle, with participation from manufacturers selling very few cars to the public and relying for their financial stability upon starting money, prize money and subsidies from component and fuel manufacturers.

The scale of racing at the present time may be gauged from the fact that an outlay of between £40,000 and £50,000 is required before a major Grand Prix is run ; a gross sum that does not differ greatly from the budgets of forty-five years ago. The apportionment is, however, very different. Instead of the organisers receiving entry fees worth £20,000, they will disburse to entrants about £10,000. On the other side of the ledger, in place of under 5,000 spectators contributing less than £5,000, there will be five times that number, and gate receipts will amount to at least 18s. in every £ received.

Nearly all Grand Prix races to-day are run over permanent circuits, and no great outlay is required on them from race to race, and even when problems of alteration or resurfacing have to be considered, the costs are limited by the fact that the total distance round the circuit rarely exceeds five miles, and only in the case of the Nürburg Ring is as much as fourteen miles.

By contrast, the earliest races were between towns, and the first major event was in 1895, when Levassor covered 732 miles on his Panhard (Paris-Bordeaux-Paris), in 48 hours 48 minutes, at an average of 15 m.p.h. As stage coaches could average 12 m.p.h., speeds of this order involved no danger to the public. However, by 1903, performances had increased to the point where Gabriel averaged 65.3 m.p.h. over 342 miles between Paris and Bordeaux, and although the roads were liberally policed, spectators were permitted to stand on the edge of the road over the entire racing distance. There were a number of accidents; in which it is computed that as many as a dozen people were killed, and with the high value set upon human life fifty years ago, the public outcry following was so great that all subsequent major races have been held on closed circuits. The first of these, held in the Ardennes, preceded the Paris-Bordeaux by a year and was fifty-three miles round. The first Grand Prix circuit from the outskirts of Le Mans to St. Calais, across to La Ferte-Bernard and then down the Paris-Le Mans road to the hairpin, was sixty-four miles round, and the Dieppe races of 1907, 1908 and 1912 had a 47.74-mile lap.

For the Amiens Race, in 1913, the circuit of the A.C.F. Grand Prix was reduced to 19.3 miles, at Lyons, in 1914, to 23 miles, and in 1921, at Le Mans, the distance was shortened to 10.6 miles, These shorter laps not only reduced the financial. outlay required in preparing the roads, but also brought the cars far more frequently before the grandstands. On the modern racecourse there is, indeed, a constant procession of vehicles before the spectators, whereas in the earlier races it was common to have a man with a bugle to signal the arrival of one of the competitors.

Putting the matter another way, the modern racing car completes a lap in a little over two minutes at Monza, and in around ten minutes at Nürburg Ring, whereas in the first Grand Prix, on the Sarthe circuit, it took Baras on his Brasier over fifty-two minutes to cover his record lap at an average of 73.3 m.p.h.

The construction of a permanent 6¼-mile circuit within the Royal Park at Monza, in 1922, was followed by the provision of a similar track at Montlhery, outside Paris, where a 7.7-mile lap was opened in 1925, and by the giant concept of the Nürburg Ring, with a 14¼-mile lap, in 1926.

The advantages of these private courses were obvious. The road surface was used only for racing, the grandstands, pits and other installations were permanent, and their capital cost could be amortised over many years, a wide variety of corners, and in some cases gradients, could be introduced, and, perhaps even more important, everybody wishing to see the race had to pay for the privilege. Only the Nürburg Ring, however, turned out to be a business proposition, for both Montlhery and Monza (not to mention the now-forgotten Sitges in Spain and Mirimas near Marseilles) proved to be too perfect and, lacking spectacular appeal, attracted relatively few spectators.

This was a contributary cause in the general decline of interest in Grand Prix racing in the late 'twenties, a period in which the eyes of the world were, undoubtedly, focused upon the Targa Florio as being the supreme test of the racing car. On this wild and mountainous circuit, the highly-developed cars, like the twelve-cylinder Delage which, with 200 b.h.p., was the most powerful racing car built before 1932, were at a hopeless disadvantage, and for four consecutive years victory was achieved by the lower-powered, but better balanced, Bugattis. In the early 'thirties the first round-the-houses race sprang into popularity, this being on the Monte Carlo circuit, of only 1.98 miles, and here again Bugatti was supreme, although challenged with some success by Alfa Romeo. Circuits which limited average speeds to under 50 m.p.h. were, however, so specialised that they could not satisfy the broad demands of Grand Prix racing and some financially viable alternative became a technical necessity.

Permanent success has attended the concept of a permanent road circuit, at Spa since 1925, at Rheims from 1928, at Berne from 1934 and, since the 1939-45 war, in a number of other localities. Here the public sees real road racing, and at the same time the installations remain standing to serve from year to year.

Another change which has led to greater attendance at Grand Prix races is to be seen in the choice of day and time. The now universally accepted Sunday race was a comparatively late-comer, the earlier events being mid-week affairs, with the 1913 to 1924 races on Saturdays. Moreover, in 1922 the flag was dropped at 8 a.m., and in the earlier events an even earlier start was made. In 1908, Rene de Knyff, in an interview before the Grand Prix, was kind enough to say, " Access to the stands will be easy this year. For those who do not wish to be in their seats by 6 a.m., or thereabouts, there will be no difficulty in reaching their places by making a slight detour."

These very early starts were, in some degree, bound up with the great duration in time of the early races as compared to the modern events. Excluding the two-day races of 1906 and 1912, we find that in 1908 the winner's time was 6 hours 55 minutes, and although in 1921 this had fallen to 4 hours, by 1925 the winner's time had increased to 8 hours 54 minutes. In 1934 the French Grand Prix was won in 3 hours 40 minutes, and in 1953 the spectators witnessed a mere sprint, which was over in 2 hours 44 minutes after the start.

The early Grand Prix races differed from the modern event in qualities other than the length of the circuit. The first races were run over untarred roads and the dust clouds were such that it was a commonplace in the town-to-town events that with another car ahead a driver deduced the road ahead from the top of the trees or telegraph poles. Even when the dust was laid by oil, calcium, or in the end by tar, it was normal for the surface to break up on the corners during the event, and in some cases on the straight also. This was particularly apparent in the 1921 Grand Prix at Le Mans, in which a number of cars were forced to retire by stones penetrating radiators, sumps and tanks, and one of the American Duesenburg team, Joe Boyer, said, " Hell, boys, this ain't no race, this is a stone-throwing competition." The winning Duesenburg actually finished with no water in the radiator as a result of an accident from this cause, and even in 1924 the road surface on the corners at Lyons deteriorated very badly.

The roads in the early years were often narrow, as well as rough, and, interviewed in 1908, the winning driver not only remarked upon the fact that after the third lap at Dieppe there were " ruts, some six inches deep, with sharp cornered granite stones lying at the bottom," but also that " over many sections, where the road was comparatively narrow, to pass a car was out of the question."

As a logical consequence of such road surfaces and narrow section, beaded edge, tyres with, by modern standards, poor quality rubber applied to a canvas foundation, tyre troubles were frequent. With the fixed wheels and rims of pre-1906 it was common to have a team of expert fitters at the replenishment depots, and in the 1905 Gordon Bennett, the Michelin men could slash off with knives four old covers and tubes, and replace with new in 5 minutes 30 seconds.

From 1906 onwards all the work had to be done by the driver and his riding mechanic, but the labour was reduced, firstly, by the employment of replaceable rims with tyres mounted already upon them and, after the relaxation in 1913 of regulations which earlier forbade their use, by complete spare wheels with tyres.

The changes were made, not as now because of wear on the tread, but through deflation caused either by a burst or a cut from the loose road material. The winner of the 1908 Grand Prix changed a rim, on average, every forty minutes during the race, and Rigal, on his Clement-Bayard (who came in fourth), was even more unfortunate, having to change a tyre on his fixed wheels and rims every twenty minutes.

It was general practice to stop at the replenishment depot every lap and make good the tyres which had been changed during the preceding circuit, and as many as four spares were carried by some of the cars. From all this it will be seen that the riding mechanic's job was no sinecure, and that even supposing the time taken per change were only two or three minutes, the running time of the car would be twenty or thirty minutes less, per race, than the published finishing time.

Against these adverse factors in early racing may be set the comparative absence of corners in relation to the total circuit length. This was particularly marked in the case of the 1906 Grand Prix, for after having covered six miles from the stands, the drivers turned left round the 130 degree bend, and then set off down the straight. Apart from a slight kink in the village of Ardenay, this straight certainly deserved the name, for the cars could be held flat out for the ensuing twenty-one miles ! This was followed by eighteen miles with less than a dozen corners of consequence, and the car was then pointed on an almost direct line back to the start.

Circuits were gradually stiffened in subsequent years, and whereas the 1906 driver could steer his car for as long as a quarter-hour without using the gears or brakes, in a modern Grand Prix race on the Nürburg Ring the driver is confronted with a corner every three seconds and a gear change every fifteen seconds.

These changed circumstances have, in the past fifty years, changed correspondingly the qualities demanded from the driver. Muscular strength and supreme physical endurance was a *sine qua non* in all the earlier races, especially as cars ran over rough roads, were stiffly sprung, and needed considerable strength to turn the steering wheel. Up to the 'thirties it was normal for drivers to crouch over the wheel, an attitude dictated originally by a desire to lessen the wind resistance, and useful in that the body could be used to aid the arm muscles in moving the high-geared steering and effecting quick corrections when the car skidded round a corner.

As maximum and cornering speeds rose to over 150 m.p.h. it became impossible to control the car with about one turn from lock to lock, and up to three turns became common. This lessened the arm effort needed, and Nuvolari pioneered the modem driving position with shoulders and head well back, and arms stretched forward to a rather remote steering wheel. Dr. Farina has popularised this style in the post-war period, and we now see the antithesis of the jockey-like crouch as drivers drift their cars on a smooth, predetermined cornering line, leaning right back, and with their eyes, in some cases, raised to heaven.

With, in most cases, perfectly smooth roads and with, comparatively speaking, softly sprung cars, the physical demands made upon the modem driver are relatively small. In consequence, although the top-flight man is probably in his prime in his late twenties, he can continue in the first rank of racing drivers into his late forties or, in exceptional cases,' early fifties. It may, indeed, be said that the development in design enhances the value of moderation and wisdom in driving and discounts the qualities of courage and virtuosity. It is also statistically true that the most successful racing drivers have been the calm and confident rather than the spectacular, Nazzaro being the supreme example in the early days of motoring, Caracciola between 1934 and 1939, and Alberto Ascari in the post-war period.

It is ironic that Ascari's father should, with Seaman, be one of the six cases of a racing driver of the highest calibre being killed when driving in a race ; it is also somewhat strange that the effective working lives of racing car designers are usually briefer than those of racing car drivers !

Birkigt, Ettore Bugatti, Louis Coatalen, Henri and L. H. Pomeroy, a group who really founded the modern school of racing car design in the period 1910 to 1914, were all aged between twenty-seven and thirty-two at this time and ceased original work in this field by the age of forty-five. Jano was in his early thirties when he developed the P.2 Alfa Romeo, and when Nibel died in November, 1934, after having designed the revolutionary Type W.25 Mercedes-Benz, he was only forty-four. By these standards, Lampredi, of Ferrari, is in his prime at thirty-seven, Eberan von Eberhorst exceptional at fifty-five, and Hodkin, of E.R.A., maintaining tradition by producing original designs when under thirty.

The importance of the Chief Engineer in the design of the racing car has, of course, varied between different companies and at different times. Before 1930 this office was, in many companies, the most important that could be held and it was accordingly occupied by great, and highly-paid, individualists fully conscious of their power and prestige. Since then the trend has been towards design teams, a system which has been worked from the earliest period with great success by Mercedes-Benz, who have, nevertheless, relied upon a few gifted individuals to provide direction and control. As a generalisation, it may be said that we have seen the last of the great designers, defining them in a sociological as well as a technical sense, and in both of these aspects there have also been many changes amongst Grand Prix racing drivers.

For the first ten years, motor racing was supported by gentlemen of means who engaged in a sport mainly for the fun of the thing, although, in some cases, their fortunes were aided as well. The beginning of the Grand Prix period coincided with the rise of the professional paid driver, many of whom, such as Sisz and Lautenschlager, were normally employed by their factories as chief test drivers. Carlo Salamano, of Fiat, for example (winner of the 1923 European Grand Prix), remains to-day as head of the testing section of the Fiat works. Others, such as Lancia and Nazarro made sufficient money by racing to be able to found their own car construction companies, and with the rise of professional skill it is natural that the professional virtuoso should come upon the scene.

Georges Boillot, an employee of Peugeot, made himself the idol of the crowd before the 1914-8 war, and he achieved this position not only by his skill at the wheel, but also by his undoubted gift of capturing the imagination of the public or, as his detractors might say, by playing to the gallery. At any rate, he was the first of many who have become public heroes, and of these Nuvolari was undoubtedly the greatest. Up to 1939 there remained an infusion of well-to-do amateurs able to gain a place in a works team by merit alone, Richard Seaman, Manfred von Brauchitsch, Count Trossi, and more recently Sommer and Dr. Farina, being some of the more prominent to succeed Segrave, Guinness, Maggi and Masetti. In the post-war world, however, it can safely be said that racing drivers find this activity a whole-time job, and for the top flight it has always been one offering great rewards, with some pre-war drivers making perhaps as much as £50,000, in modern values, in a single lucky year.

In vivid contrast to the rewards to a few gifted brave men, the relation between the earlier works drivers and their team managers seems feudal by modern standards. It was recorded, as a special mark of the humanity of Louis Coatalen, when he was *patron* of the Sunbeam team, that when a riding mechanic had been lifted from a car with a deeply-cut forehead, as the result of a stone being thrown up, the injured man was graciously given permission to leave the pit to have his injury attended to.

This was in 1913, and ten years later, improvement in tyres, notably the use of a cord foundation, increases in section and the use of the well-base rim, led most of the Grand Prix starters to discard the spare wheel ; and 1924 saw the last of the riding mechanics. A stop on the circuit now meant that it was hardly worthwhile for the driver to continue in the race, and the regulations covering repairs or replenishment at the pits were steadily relaxed, so that first one, and later three, persons could work on the car, with the driver either remaining in it or seeking a brief refuge in the pit itself.

The exit of the riding mechanic brought about a natural change in the shape of the racing car. There have been five basic fashions in racing car bodywork, and we are about to enter a sixth phase. Early experiments with streamlining effected by knife-edged bonnets, slab-sided tails and radiators slung externally below the front of the frame were disappointing, and up to 1912 most racing cars were merely a chassis with two seats attached and space for a fuel tank and spare wheels behind. Aesthetically, as well as mechanically, the 1912 Grand Prix at Dieppe was a dividing point, for whereas the big cars, exemplified by Peugeot and Fiat, retained the earlier tradition, the 3-litre models, as typified by Sizaire-Naudin, Sunbeam and Vauxhall, had pleasingly proportionate bodies giving full protection to the occupants, the former pair having long tails, and the last-named a stub tail. Lyons, in 1914, saw the establishment of the long tail fashion with staggered seating for driver and mechanic, and this was continued for the next ten years.

In the first single-seater cars of 1926 and 1927 the driver was offset in a very low car with the seat placed well beneath the propeller shaft line. This theme was varied in the Mercedes-Benz of 1938-9, by placing the driver very low down, but the seat central in the car, the propeller shaft itself being offset sideways, and B.R.M. have followed this arrangement in the post-war period. The rear-engined Auto Unions of 1934-9 were the exceptions which test every rule, and everyone else has followed the example set by the 1932 Alfa Romeos which had single-seater bodies centrally placed above the propeller shaft, the greater frontal area of this arrangement being accepted in exchange for mechanical simplicity. It has become general to place double reduction gears at the end of the propeller shaft so that this component, and the seat, can be lowered by, say, two inches, and in the post-war years that once predominant feature of the racing car, the radiator, has disappeared within a projecting, downward sloping, cowling, expressively described by the Americans as a " drooped snoot."

Looking forward, we know that we stand on the threshold of fully aerodynamic bodies giving enclosure to the wheels and the driver, and although such shapes will pose problems of weight and high speed stability; it can be reckoned that they are the type of the future.

Looking back, if 1924 bears the label " Exit the Riding Mechanic " then 1934 could properly carry the directions " Entry of the Specialists " In that year the organisation of motor racing by the Germans, for the purpose of national propaganda as well as for private publicity, made it possible financially greatly to increase the number of technicians who attended the cars on their courses. A typical example was Dietrich, of Continental Tyres, who would make the most accurate measurements of tread wear and road temperature in order to advise on tyre sections, tyre pressures and patterns of tread, and working with him would be engineers concentrating upon carburetter settings, choice of sparking plugs, brake linings and so on. These all played a prominent part in ensuring victory, and when this had been secured it became increasingly important to achieve maximum publicity for the win. For this reason Press relations were based on a lavish budget which made possible not only champagne parties to meet the drivers after victory, but also extremely informative and well-produced " hand-outs " distributed before the race, and an ample supply of photographs and other souvenirs after it. This was perhaps an isolated phenomenon but the change from the classic concept of one great prize each year, which obtained up to 1914, to a race of major importance every fortnight, twenty years later, has vastly increased the difficulties, as well as the costs, of running any racing team, and taking it from race to race. The Type 59 Bugattis, of 1934, were probably the last Grand Prix cars which could profitably carry a registration number, be used on the road, and driven to a race under their own power, if necessary. Since then all the cars, and a host of impedimenta, have had to be moved around Europe on lorries, and the full equipment of the racing team, then and now, will comprise at least four racing cars and two dozen persons as well as the requisite spare parts. All of this has increased the importance of the racing Team Manager who has become responsible for a most complicated time-table of transport arrangements as well as for team discipline, driver control and expert pit work. The last twenty years have seen enormous progress in the technique of wheel changing and fuel replenishment, and whereas in the 1934 Grand Prix, a typical time by the Mercedes-Benz mechanics was 90 seconds, by 1939 the same operation was undertaken in 30 seconds and this standard of performance has since become normal.

I have been told by Prince Wiacemski that the Mercedes drivers were given a thorough briefing in racing tactics as early as the Grand Prix of 1907. They attended lectures in which they had to learn the recognition points of other makes, and were told the strengths and weaknesses of rival drivers, so that they could play upon them to best advantage.

But team tactics, in the sense of controlling the speed of individual drivers by signals from the pits, were almost impossible when very long circuits were used, with the cars starting at intervals:

In 1914, however, Mercedes were able to control all their cars in a modern manner so as, firstly, to pursue, and then to overtake, Georges Boillot whose Peugeot was in the lead for 230 miles.

The provision of accurate information was complicated before 1922 by the practice of dispatching cars in pairs at intervals, and in the case just mentioned Boillot had left the line five and a half minutes before his pursuer, Lautenschlager. Thus, although he lost the lead on the eighteenth lap, this fact could not be signalled to him until, having completed the nineteenth circuit, he passed the pits on his way to the last round, in which after six and a half hours of desperate struggle he broke up his engine when only fifteen miles from the finish, and was not ashamed to weep.

With massed starts the practice has been extended and refined, although it has been a lesser element in the post-war events than in the immediately pre-war races. With the exception of the years 1949, when Alfa Romeo were absent, and 1951, when they were challenged successfully by Ferrari, the mere entry of a works car of one of these makes has ensured a win in either Formula I or Formula II. The discipline of the Team Manager has, therefore, been concerned only with preventing fruitless struggle within his own team. As a paradox, the entire reverse of this was witnessed in 1953, for in many races the Maserati and Ferrari cars were so evenly matched that it was a case of every driver for himself.

Having by now sketched some of the scantlings which have supported the stage upon which the Grand Prix cars have appeared, I will conclude by discussing the vexed question of " The Golden Age " The myth that Grand Prix racing has enjoyed, in the past, splendours not to be experienced in the present, rests, in part, upon the truth that there have indeed been peak years, notably 1903, 1908, 1914, 1932 and 1937, in the history of motor racing.

But belief in past glories is also a personal and subjective affair. Many men who became enthusiastic about motor racing in their early twenties found their interest waning as they approached their forties. To them, the cars which they saw in a span of, say, fifteen years were the most exciting in the world, and the drivers paragons of skill, courage and chivalry. Apart from this, to those who have a reflective turn of mind, the differing phases of motor racing will have a varied appeal. The antiquarian will obviously be fascinated by the struggles of the pioneers and the extraordinary incidents of the great town-to-town races as depicted by Jarrot.

Each subsequent period has some special virtue of its own. My personal memories of motor racing go back to 1912 (when I was five years of age) and I recollect most vividly the social splendours which determined that even a Hertfordshire hill climb should be accompanied by a marquee with buffet and champagne provided by Lord Rothschild, and attended by men and women of fashion, as well as by the competitors. Moreover, the cars of this time, although deficient in performance by modern standards, loomed so large upon the narrow and somewhat rough roads that they presented a truly awe-inspiring spectacle which may be recovered in part to-day in the race meetings organised by the Vintage Sports-Car Club.

In the mid-'twenties, the element of fashion and personality continued to pervade the motor racing scene, but the smaller cars, of no great speed by modern standards, did not, in themselves, provide an enthralling spectacle and motor racing diminished steadily in popular appeal. Nevertheless, as has been recorded for all time by S. C. H. Davis, who wrote as " Casque " in *The Autocar,* it was a truly entertaining affair to those on the inside.

The 'thirties saw a complete reversal of all that Grand Prix racing had meant in the previous decade. The emphasis was now on mass entertainment, with politics providing both the cash and the moral drive. From a material point of view it is improbable that the world will again see so many motor racing teams, supporting so large an army of mechanics, transporters and specialists.

Nor is it likely that we shall see in the future cars so difficult, indeed dangerous to drive, as those built in 1936 and 1937. In effect, only two drivers, Caracciola and Rosemeyer, mastered the problems posed by over-steering cars with a laden weight of 22 cwt., and an engine output of 600 b.h.p., and between them they won fifteen of the seventeen major races of these two years. With one established, for some ten years, as Germany's most famous racing driver, and the other, a young man recently graduated from motor cycles, this pair exemplified tradition and youth in a manner highly gratifying to the German public, but it must not be thought that national enthusiasms entirely overran the sporting spirit. In the 1938 German Grand Prix, for example; it was Nuvolari who received the loudest and longest cheers as the cars were pushed up to the starting line, and when Seaman had won we heard the British national anthem before the German was played. Anyone who wishes to recapture the atmosphere of those days should certainly read Monkhouse's *Motor Racing with Mercedes-Benz.*

The post-war cars are less spectacular than the 1934-9 models (and those of 1908-14 for that matter) for, due to their great stability and improvement in driver technique, faster lap speeds have been accompanied by smoother cornering and rarely has the spectator felt that the cars were being driven along the edge of disaster.

Nevertheless, the satanic shriek of the B.R.M.s has equalled the pre-war supercharger scream of the Mercedes-Benz and the skill and courage of the real masters such as Ascari, Fangio and Farina has certainly matched, and may well have exceeded, that of any previous drivers. So, although we are, perhaps, too close to the past five years properly to evaluate their significance in motor racing history, we can be reasonably certain that they will be treated with respect by the historians of the future, and we can be absolutely sure that we enter a period in which Grand Prix racing cars will travel faster than they have ever done before.

APPENDICES

APPENDIX A*

RESULTS OF THE MAJOR RACES, 1947-53

APPENDIX B

SUMMARY OF DEVELOPMENTS, 1900-53

APPENDIX C

SPECIFICATION OF SUCCESSFUL CARS, 1906-53

APPENDIX D

MAXIMUM AND RELATIVE LAP SPEEDS OF THE FASTEST CARS BY YEARS 1906-53

APPENDIX E

LIST OF GRAND PRIX CARS BY NATIONALITY AND YEARS OF ENTRY
TOGETHER WITH NUMBERS OF WINS IN
MAJOR EUROPEAN ROAD RACES, 1906-53

---

* *For results of 200 Major Races, 1906-39, see Appendix A, Volume I.*

APPENDIX A
RESULTS OF THE MAJOR RACES, 1947–53

Date	*Course*	*Driver*	*Car*	*Winning Speed m.p.h.*	*Lap Speed (Rec'd*)*
BELGIAN GRAND PRIX					
29/6/47	Spa	J.-P. Wimille	Alfa Romeo	95.28	101.94
9/6/49	,,	L. Rosier	Talbot	96.95	—
		G. Farina	Maserati	—	101.64
18/6/50	(shortened circuit)	J. M. Fangio	Alfa Romeo	110.05	—
		G. Farina	Alfa Romeo	—	115.15*
17/6/51	,, ,,	G. Farina	Alfa Romeo	114.26	—
		J. M. Fangio	Alfa Romeo	—	120.51*
22/6/52	(*See European Grand Prix*)				
21/6/53	,, ,,	A. Ascari	Ferrari	112.47	
		J. M. Fangio	Maserati		117.3 (P)
BRITISH GRAND PRIX					
2/10/48	Silverstone (with chicane)	L. Villoresi	Maserati	72.28	76.82*
14/5/49	,, ,, ,,	E. de Graffenried	Maserati	77.31	—
		B. Bira	Maserati	—	82.82*
13/5/50	(*See European Grand Prix*)				
14/7/51	Silverstone	F. Gonzales	Ferrari	96.11	100.65(P)
		G. Farina	Alfa Romeo	—	99.9*
19/7/52	,,	A. Ascari	Ferrari	90.92	95.79 (P)
18/7/53	,,	A. Ascari	Ferrari	92.97	97.57 (P)
EUROPEAN GRAND PRIX					
4/7/48	Berne	C. Trossi	Alfa Romeo	90.81	—
		J.-P. Wimille	Alfa Romeo	—	95.05
11/9/49	Monza	A. Ascari	Ferrari	105.04	111.14 112.72 (P)
13/5/50	Silverstone	G. Farina	Alfa Romeo	90.95	94.02*
1/7/51	Rheims	J. M. Fangio	Alfa Romeo	110.97	118.29* 119.99 (P)
22/6/52	Spa	A. Ascari	Ferrari	103.13	114.03 (P)
FRENCH GRAND PRIX					
21/9/47	Lyons	L. Chiron	Talbot	78.09	—
		A. Ascari, L. Villoresi, and E. de Graffenried	Maseratis	—	82.4*
18/7/48	Rheims	J.-P. Wimille	Alfa Romeo	102.1	112.2 (P)
17/7/49 (Grand Prix de France)	,,	L. Chiron	Talbot	99.98	—
		P. Whitehead	Ferrari	—	105.1
2/7/50	,,	J. M. Fangio	Alfa Romeo	104.83	112.35 116.2 (P)
1/7/51	(*See European Grand Prix*)				
6/7/52	Rouen	A. Ascari	Ferrari	80.14	84.63 (P)
5/7/53	New Rheims	M. Hawthorn	Ferrari	113.65	
		J. M. Fangio	Maserati		115.91
GERMAN GRAND PRIX					
29/7/51	Nürburg Ring	A. Ascari	Ferrari	83.76	—
		J. M. Fangio	Alfa Romeo	—	85.69

Date	*Course*	*Driver*	*Car*	*Winning Speed m.p.h.*	*Lap Speed (Rec'd*)*
GERMAN GRAND PRIX (*cont'd*)					
3/8/52	Nürburg Ring	A. Ascari	Ferrari	82.21	84.4
2/8/53	,,	G. Farina	Ferrari	83.89	
		A. Ascari	Ferrari		85.62
ITALIAN GRAND PRIX					
7/9/47	Turin	C. Trossi	Alfa Romeo	70.29	74.16*
5/9/48	,,	J.-P. Wimille	Alfa Romeo	70.38	78.61*
11/9/49	(*See European Grand Prix*)				
3/9/50	Monza	G. Farina	Alfa Romeo	109.67	—
		J. M. Fangio	Alfa Romeo	—	117.44*
16/9/51	,,	A. Ascari	Ferrari	115.93	—
		G. Farina	Alfa Romeo	—	120.97*
7/9/52	,,	A. Ascari	Ferrari	109.8	112.04 (P)
13/9/53	,,	J. M. Fangio	Maserati	110.69	
		A. Ascari	Ferrari		114.86 (P)
NETHERLANDS GRAND PRIX					
31/7/49	Zandvoort	L. Villoresi	Ferrari	77.12	—
		B. Bira	Maserati	—	79.49*
23/7/50	,,	L. Rosier	Talbot	76.44	—
		J. M. Fangio	Maserati	—	82.5*
22/7/51	,,	L. Rosier	Talbot	78.46	—
		A. Pilette	Talbot		82.27
MARNE GRAND PRIX					
6/7/47	Rheims	C. Kautz	Maserati	95.8	—
		L. Villoresi	Maserati		100.99
MONACO GRAND PRIX					
16/5/48	Monte Carlo	G. Farina	Maserati	59.61	62.32
21/5/50	,,	J. M. Fangio	Alfa Romeo	61.33	64.09
MONZA GRAND PRIX					
17/10/48	Monza	J.-P. Wimille	Alfa Romeo	109.98	—
		C. Sanesi	Alfa Romeo	—	116.95*
PENYA RHIN GRAND PRIX					
31/10/48	Pedralbes	L. Villoresi	Maserati	89.44	94.16*
29/10/50	,,	A. Ascari	Ferrari	93.8	97.7*
28/10/51	(and Spanish Grand Prix)	J. M. Fangio	Alfa Romeo	98.76	105.2*
		A. Ascari	Ferrari		108.1 (P)
RHEIMS GRAND PRIX					
29/6/52	Modified Rheims	J. Behra	Gordini	105.33	
		A. Ascari	Ferrari		110.04 (P)
SWISS GRAND PRIX					
8/6/47	Berne	J.-P. Wimille	Alfa Romeo	95.42	96.85
4/7/48	(*See European Grand Prix*)				
3/7/49	,,	A. Ascari	Ferrari	90.76	—
		G. Farina	Maserati	—	95.1
4/6/50	,,	G. Farina	Alfa Romeo	92.76	100.68
27/5/51	,,	J. M. Fangio	Alfa Romeo	89.05	104.46 (P)
23/8/53	Berne	A. Ascari	Ferrari	97.17	—
		J. M. Fangio	Maserati	—	101.72 (P)

Date	*Conditions*	*Type of Car*	*Technical Notes*	*Leading Makes*
1900-6	Pre-Grand Prix period of Gordon Bennett and other town-to-town races over distances up to 600 miles. 1904 and 1905 Gordon Bennett races run on closed circuits of 300 miles distance.	Cars changed from primitive types with 5-litre, 25 b.h.p. engines to 10-16-litre models developing 90-120 b.h.p. at 1,000-1,400 r.p.m. as used in the Gordon Bennett Races of 1903-5.	General form of the racing car established, together with initial appearance of many subsequent features such as I.F.S. (Bollee) ; inclined o.h.v. (Pipe) ; gate change, honeycomb radiator and overhead camshaft (Mercedes) ; friction shock absorbers (Mors) ; clash type gearbox (Panhard) ; girder type tubular frame and alcohol benzol fuel mixture (Gobron Brillié) ; propeller shaft drive with live axle (Renault), and de Dion type axle.	Richard Brasier, Darracq, Fiat, Mercedes, Mors, Napier, Panhard and Renault.
1906-7	First Grand Prix races organised by Automobile Club de France and run under weight limit of 2,240 lb., 1906 ; consumption limit 9.4 m.p.g., 1907, over 770 and 477 miles respectively. Road surface of water-bound macadam and tarred, with lap lengths of *circa* 50 miles duration and races 5-7 hours each day, with two-day racing in 1906. Competitors despatched singly, at intervals of 90 secs. in 1906, 60 secs. in 1907 on counter-clockwise courses. Pressure refuelling commonly used. First national racing colours in Grand Prix racing in 1907.	Similar to preceding Gordon Bennett models, using four-cylinder short-stroke engines of 12-18 litres capacity, developing between 100 and 120 b.h.p. Engine speed restricted to *circa* 1,200 r.p.m. with mainly short strokes and low tension magnetos. Fixed wooden wheels with limited use of detachable rims and equal division between propeller shaft and chain final drive. Steel channel frames straight in side elevation and plan with low-sided bodies consisting of two high-built seats with cylindrical fuel tank and spare wheels mounted behind them.	Fiat used inclined overhead valves operated by push-rods and Mercedes raced a six-cylinder overhead camshaft engine in 1907. Straight-eight engines were entered in the 1907 Grand Prix by Weigel, Porthos and Dufaux. First use of supercharging by Chadwick with centrifugal supercharger in Great Despair hill-climb (U.S.A.), 1907, and three-stage centrifugal supercharging in 1908.	Clement Bayard, Richard Brasier, De Dietrich, Fiat, Renault and Darracq.
1908	Grand Prix formula restricted piston area to 117 sq. in., equivalent to 155 mm. bore diameter for four-cylinder engines ; 127 mm. diameter for six cylinders. First use of " pits " in front of grandstands.	Four cylinders, short-stroke push rod o.h.v. engines, developing 130-140 b.h.p. at 1,400-1,800 r.p.m. from 12 litres capacity. Frames, transmission systems and bodies on same general lines as 1906-7. Some cars used dropped frames and there was general use of relatively high scuttles and enclosed body sides.	Detachable wire wheels proposed for Napier Grand Prix cars, but banned by A.C.F. General use of detachable rims on fixed wooden wheels. Clement Bayard successfully used overhead camshaft engines and Motobloc initiate central flywheel.	Clement Bayard, Benz, Fiat, Mercedes, Richard Brasier and De Dietrich.
1909-11	Grand Prix racing abandoned for four years. Old-established companies retired from competition work with the exception of Fiat in U.S.A. races and European hill-climbs. Voiturette racing enthusiastically supported by newly formed firms, such as Delage and Peugeot.	Nil.	Independent front wheel suspension revived by Sizaire-Naudin in 1907 on Voiturette racing cars of restricted piston area. Use of stroke-bore ratios of up to 2.5:l piston speeds of 3,000 ft./min. and multiple valves fostered by these regulations. First use of front brakes by Isotta Fraschini in Indianapolis 500 Mile Race of 1910 and Santa Monica (1911).	Nil.
1912	A.C.F. Grand Prix re-established with a two-day race over 955 miles, with no restrictions on weight or engine size. Circuit as employed in 1907-8, but tarred roads produced improved road surfaces.	Struggle between old and new forms, Fiat represented former in race with 14-litre, four-cylinder, short stroke, o.h. camshaft engine with chain drive and fixed wooden wheels with detachable rims. Peugeot initiated new trend with smaller and lighter 7.6-litre long-stroke engine with propeller shaft drive (Hotchkiss system), and detachable wire wheels. The large cars developing 120-140 b.h.p. were challenged by 3-litre, four-cylinder, side-valve Sunbeams and Vauxhalls, developing 65-75 b.h.p. at 3,000 r.p.m. and weighing less than one ton. Sunbeam (third in Grand Prix) used tapering tails based on Brooklands experience.	Peugeot originated the twin overhead camshaft engine with four valves per cylinder and central plug location in a monobloc casting and carried forward their Voiturette experience to show the merits of the long stroke (1.82:l ratio) engine. Sunbeam and Vauxhall successes proved the possibility of engines with pressed steel pistons running at 2,800-3,000 r.p.m. in long-distance racing. All cars had high tension ignition.	Fiat, Peugeot, Sunbeam, Vauxhall.
1913	A.C.F. Grand Prix run under fuel consumption limited to 14 m.p.h. for cars weighing not less than 800 Kg. fitted with square backed bodies. Race run over 556 miles with lap distances reduced to 19.52 miles, resulting in cars being on different laps during end of race. Increasing interest in 3-litre car racing. Change to clockwise courses used for all subsequent Grand Prix events. First Saturday race, continued until 1925.	Grand Prix and 3-litre racing dominated by Peugeot, using four-cylinder long-stroke (2:1); twin camshaft engines developing 90 b.h.p. for the small size and approximately 130 b.h.p. in Grand Prix form. Taper tails on Grand Prix bodies excluded by regulation.	Peugeot initiated two-piece bolted-up crankshaft (running in ball and roller bearings), inserted endwise through a barrel-type crankcase and dry sump lubrication, also used knock-off lock rings for detachable wire wheels Increased employment of built-up pressed steel pistons. Last use of chain drive in racing of Grand Prix status by Mercedes in Sarthe Grand Prix. Mercedes pioneered use of separate forged steel cylinders with welded ports and jackets in same race. Delage used five-speeds and horizontal opposed valves. First appearance of sleeve valves (Mercedes at Indianapolis) and last appearance of side valve engines in Grand Prix racing.	Delage, Peugeot, Sunbeam ; re-entry of Mercedes with privately sponsored team of experimental cars.
1914	4½-litre capacity limit for A.C.F. Grand Prix run over 20 laps of 23.3 mile circuit. Development of team tactics amongst entries received from 14 manufacturers.	General use of long-stroke, four-cylinder engines with four valves per cylinder operated by one or two overhead camshafts. Engine output *circa* 120 b.h.p. at 2,800 r.p.m. with cars weighing approx. 23 cwt. Seat height reduced by double drop frame side rails. Tapering-tail bodies employed by Peugeot.	First use of four-wheel brakes in European racing by Delage, Peugeot, Fiat and Piccard Pictet. First use of combined engine and gearbox units by Fiat and mica-insulated plugs (K.L.G.) fitted in Sunbeams. Delage tried positively closed valves, and Vauxhall pioneered front springs passing through the front axle.	Delage, Mercedes, Peugeot, Sunbeam.

Date	Conditions	Type of Car	Technical Notes	Leading Makes
1915-6-7-9	Racing confined to U.S.A. track events.	1914 Grand Prix cars uniformly successful with the post-war-built Ballot showing superior lap speed in 1919, although using traditional bolster tank body.	First successful use of eight cylinders in line by 4.9-litre Ballots and Duesenbergs (the latter having detachable cylinder heads) and of V.12 engine by Packard, all in 1919 Indianapolis race except Packard, which ran first in 1917 at Sheepshead Bay.	Ballot, Mercedes, Packard, Peugeot.
1920	Engines limited to 3 litres capacity by international formula, but racing restricted to U.S.A.	General use of long-tailed bodies under influence of high speeds attained at Indianapolis.	One out of four starters at Indianapolis had eight-cylinder in-line engines running at approximately 3,500 r.p.m. with an S/B ratio of 1.7:l. First use of light alloy pistons and multi-carburetters in Grand Prix racing.	Ballot, Duesenberg, Monroe.
1921	International racing revived under 3-litre capacity limit. A.C.F. Grand Prix held over 10.6 mile circuit with very loose surface. Pits now abandoned in favour of road-level depots ; pressure or gravity refuelling forbidden, and replaced by cans or churns.	Almost unanimous use of long-stroke, eight-cylinder engines with more than two valves per cylinder, developing 115-120 b.h.p. at 3,500-4,200 r.p.m. Wide use of long-tailed bodies with staggered seating and close under-cowling.	First use in Grand Prix racing of hydraulically operated brakes, high-tension coil ignition, and three overhead valves per cylinder, and three-speed gearbox with central gear lever, all by Duesenberg. First use of mechanical servo brake operation (Ballot and Fiat), and of forged steel cylinders in group, and all-roller bearing crankshaft, both by Fiat in Brescia Grand Prix. First supercharged engine in European racing, the Mercedes using Roots blower in Coppa Florio. Experiments by Ricardo with alcohol blend fuel-RD1, RD2, etc.	Ballot, Duesenberg, Fiat.
1922	International 2-litre limit for Grand Prix racing. First national Grand Prix other than French (Italian) ; world's first artificial road circuit built in Monza Park ; first massed start for A.C.F. (French) Grand Prix at Strasbourg.	Reduction in engine capacity leads to revival of four- and six-cylinder engines, developing 80-90 b.h.p. at 4,500-5,000 r.p.m. fitted into small cars weighing under 15 cwt. Fiat introduced wedge-shaped bodies, but bulk of cars continued with round sections using tapering tails. Last Grand Prix race in which spare wheels were carried on the car. Substantial improvement in road surfaces.	Design dominated by Fiat practice of welded cylinders with two valves per cylinder at 96 degree angle, roller-bearing crankshaft and big-ends, and torque tube drive. Revival of four- and six-cylinder engines. Vauxhall Inmate one-piece connecting rods and detachable wet cylinder liners in R.A.C. T.T. car.	Fiat.
1923	As 1922.	Similar in general specification to 1922, but many makes reflected the superiority of Fiat in the previous year by producing cars of similar design and/or appearance.	General acceptance of two-valve, two-camshaft engines with roller bearings throughout. First use (by Delage) of V. 12 engine in road racing. First use by Bugatti and Voisin of aerodynamically formed bodies. First victory of supercharged engine in full Grand Prix racing secured by Fiat in European Grand Prix, which also saw first rear-engined racing car with independent rear suspension by swing axle, both featured by Benz cars.	Fiat, Sunbeam.
1924	As 1923.	As 1923, with slight increases in stiffness and weight.	Light alloy wheel and brake drums fitted on Type 35 Bugatti. Designers tended to revert to eight-cylinder in-line engines. First use of superchargers aspirating mixture from the carburetter by Duesenberg at Indianapolis (with centrifugal blower) and Sunbeam in French Grand Prix with Roots blower. All Grand Prix status races won by supercharged cars using alcohol-benzol fuel.	Alfa Romeo, Fiat, Sunbeam.
1925	As 1924 ; riding mechanic barred for first time, but mechanic's seat and driving mirror obligatory. A.C.F. (French) Grand Prix run on 7.6 mile lap on artificial road circuit (Montlhery) for first time. Repair and replenishment of car continued to be restricted to driver and one mechanic alone as in all previous Grand Prix races. Belgian Grand Prix added to international calendar. First Sunday race (A.C.F.)	As 1924.	All Grand Prix cars supercharged except Bugatti, who in Targa Florio, scored last win in Grand Prix racing with an unsupercharged car. General increase in power and speed by detail development. Fiat fitted inter-cooler between blower and carburetter.	Alfa Romeo and Delage.
1926	Grand Prix cars limited to 1½ litres capacity with driver only, but mechanic's seat obligatory, and one mechanic only allowed to assist driver. General use of tracks for national Grands Prix.	Eight-cylinder in-line engines with roller bearings offset to left-hand side of car giving very low driving position and frontal area. Successful year by Bugatti, who continued 1925 chassis with modified engine to bring it within the capacity limit.	All Grand Prix cars used supercharging. Predominance of offset single-seater, but first appearance in European road-racing of bodies with single central seats, these being used by Duesenberg and Miller in 1927 Italian Grand Prix, which marks last appearance of U.S.A. cars in European formula race.	Bugatti and Delage.
1927	As 1926, but mechanic's seat no longer obligatory.	As 1926, but Bugatti two-seater type outclassed.		Talbot and Delage.
1928-30	General disregard of internationally agreed formula with races run under *formule libre.* Feeble support for Grand Prix racing by manufacturers leading to entry lists made up of individuals competing as amateurs for sport or individuals for private advertisement or gain. Grand Prix of A.C.F. run as sports car race ; first Sunday race on public road (1929).	Revived use of 2-litre models designed originally for 1922-5 formula. General use of two-seater bodies and chassis specification, making it possible to use cars for sports car events or general road use in addition to racing.	Little development in engine design. Average speeds improved by detail development in suspension and braking systems. First use by European constructor of detachable cylinder head in Grand Prix racing on 2&litre Maserati. Wide use on this car of magnesium alloy castings ; cylinder head made of cast aluminium. Racing car design influenced by lack of works' teams and maintenance, and alternative entry in sports car racing. Roller bearings abandoned except by Bugatti.	Alfa Romeo, Bugatti, Maserati.

Date	*Conditions*	*Type of Car*	*Technical Notes*	*Leading Makes*
1930-3	No restriction on size of engine or car. Two mechanics in addition to driver(s) allowed to assist in repairs and replenishment. Reintroduction of works-sponsored teams and/or drivers. Contemporary with decline in importance of A.C.F. (French) Grand Prix, a great increase in races of Grand Prix status run by national or urban clubs, e.g., German and Czechoslovak Grands Prix and Rome and Monaco races. First starting line-up on practice times (Monaco Grand Prix, 1933). Revival of pressure refuelling.	Unsuccessful experiments with engines of between four and five litres capacity, developing *circa* 300 b.h.p. Decisively successful introduction of cars with single, central, seats placed above propeller shaft.	Reintroduction of designs built purely for racing but designed under the influence of sports car requirements and making use of series production components. Engine size limited to 3 litres with a maximum of *circa* 5,500 r.p.m. and 200 b.h.p. Revival of hydraulic brakes by Maserati and of de Dion axle in racing by Miller at 1931 Indianapolis. Alfa Romeo made first use of light alloy cylinder blocks with inserted dry liners and integral head with valves facing direct on light alloy seats and built twin-engined car with two propeller shafts followed by V shafts connecting to single engine. Last appearance of non-poppet valve engine (Peugeot in 1931 French Grand Prix).	Alfa Romeo, Bugatti, Maserati.
1934	Introduction of international formula limiting weight to 750 Kg. No restriction on size of engine. Four mechanics permitted to assist in repair and replenishment. Increase in number of Grand Prix status races became a permanent feature of the international calendar. Predominance of works' teams.	Initial successes secured by slightly modified 1933 cars; later events won by German cars developing 300-400 b.h.p., and many novel technical features. All Grand Prix cars except Bugatti used central single-seater bodies and all, with the exception of Auto Union straight-eight engines.	First use of independent suspension for all four wheels on racing cars by Auto Union and Mercedes-Benz. Revival by Auto Unions of rear-engine mounting pioneered by 1923 Benz. First use of sixteen-cylinder V-type engine by Auto Union. Revival by Mercedes-Benz of welded steel cylinder construction with 60 degree four-valve heads and all-roller bearing crankshaft and of five forward speeds by Auto Union. Increases in engine size in German cars up to 3½-4½ litres. First use of torsion bar springs in Grand Prix racing by Auto Union for front suspension system, and of double reduction rear axle to give low propeller shaft height by Bugatti. First use of welded steel frames in the form of round tubes by Auto Union and rectangular box section by Mercedes-Benz. Revival of detachable wet cylinder liners by Auto Union.	Alfa Romeo, Bugatti, Auto Union, Mercedes-Benz.
1935	As 1934. Portable electric starters first used by Auto Union at A.V.U.S. races. Elimination of successful amateur drivers by works-retained professionals.	As 1934, with larger engines and greater power output.	All successful Grand Prix cars used independent front suspension. Last Grand Prix victory by a car fitted with a live rear axle (Alfa Romeo, German Grand Prix). Increase of engine size in German cars up to 5 litres and of engine output up to 400 b.h.p. All Grand Prix cars, except Bugatti, used hydraulic brakes. Torsion bar springs used for front and rear suspension units on Auto Unions. First use of larger diameter rims on rear wheels than on front wheels and Z.F. limited slip differential.	Alfa Romeo, Auto Union, Mercedes-Benz.
1936	As 1935.	As 1935, with engine capacity raised up to 6 litres and power available increased to over 500 b.h.p.	Trend towards high alcohol content fuels (up to over 85 per cent), particularly by Mercedes-Benz. Introduction of two leading shoe brakes.	Auto Union, Alfa Romeo, Mercedes-Benz.
1937	Extension of 1934-6 750 Kg. formula for one year.	General use of engine sizes of between five and six litres with engine outputs of 520-640 b.h.p.	Construction of Type 125 Mercedes-Benz which pioneered thin wall oval tube frame members, wishbone, i.f.s., with open coil springs, and road racing use of de Dion type rear axle. Car performance factors expressed in terms of b.h.p./ton and b.h.p./frontal area, reached an all-time high level. Outstanding reliability of German-built cars. Mercedes-Benz abandoned supply of pressure air from supercharger to carburetters (Vanderbilt Trophy). Development on German cars of Ethelyne-Glycol for cooling, and four leading shoe brakes by Auto Union. Hydraulic shock absorbers first used in Grand Prix racing (Mercedes-Benz).	Auto Union, Mercedes-Benz.
1938	Formula based on sliding scale of weight in relation to capacity: weight leading in effect to 3-litre cars weighing not less than 850 Kg.	Continued use of central single-seater bodies on chassis powered by engines developing 400-450 b.h.p. Marked reduction in height by Mercedes-Benz following upon transmission developments.	Auto Union and Mercedes-Benz both reduced spring rates and used hydraulic shock absorbers. Independent rear suspension abandoned by both of these companies in favour of de Dion type rear axle coupled with torsion bar springs. Mercedes-Benz used propeller shaft inclined and offset in both planes which permitted very low mounting of central seat. Increased r.p.m. and supercharged pressures led to deterioration in specific fuel consumption and the need for much larger fuel tanks despite reduction in engine size and total horsepower. Auto Union pioneered side tank, and Mercedes-Benz scuttle tank filled from main rear tank. Revival of V.12 engine by Auto Union and Mercedes-Benz. Unsuccessful experiment by Auto Union of all-enveloping streamlined road-racing cars in A.C.F. Grand Prix at Rheims. Auto Union and Mercedes-Benz had five-speed gearboxes.	Auto Union, Mercedes-Benz.
1939	As 1938.	As 1938, with engine power increased to 480-500 b.h.p.	Auto Union and Mercedes-Benz developed two-stage supercharging, using Roots blowers in series, and supercharge pressures of up to 2.65 Ata. Mercedes-Benz fitted turbo-finned brake drums and raised maximum possible engine speed to 10,000 r.p.m., with peak power developed at 8,000 r.p.m. Auto Union developed floatless carburetters.	Auto Union, Mercedes-Benz.
1946	Extreme shortage of fuels, tyres and plugs, also general breakdown in international communications. Races run under *formule libre.*	Pre-World War II cars except ex-German teams. Alfa Romeo the only entrant of works teams, with 1½-litre Type 158 models modified to two-stage boost for some entries.	Most races run on short circuits at average speeds of under 70 m.p.h. over distances less than 100 miles.	Alfa Romeo, Maserati.

Date	*Conditions*	*Type of Car*	*Technical Notes*	*Leading Makes*
1947-9	First three years of Formula I limiting engines to 1½ litres S. or 4½ litre U/S.	Competition between 4½-litre principle exemplified by six-cylinder Talbot with push-rod-operated valves, and 1½-litre S. types represented by four-cylinder Maserati with equal bore and eight-cylinder Alfa Romeo with bore : stroke ratio 1.2 : 1. General use of tubular frames ; transverse leaf springs ; swing axle and drivers seated immediately above a central propeller shaft with single-stage reduction gears mounted ahead of bevel box.	Superiority of two-stage blown 1½-litre-engined cars over both the unblown type and twelve-cylinder 1½-litre models with single-stage blowing.	Alfa Romeo, Ferrari, Maserati, Talbot.
1950-1	Revival of competition between works teams as sponsored by Alfa Romeo and Ferrari.	Successful challenge to 1½-litre S. models by 4½-litre twelve-cylinder types with over 90 sq. in. piston area developing over 350 h.p. and weighing less than one ton.	Continued use of transverse leaf springs with general supersession of swing axle by de Dion axle at rear of car. Great attention given to brake developments characterised by improved friction lining and substantial increase in the width of the brake drum. Reduction of rim diameters to 17 or 16 in. in order to lower the unsprung weight. No marked change in other chassis design trends or bodywork. First appearance of sixteen-cylinder 1½-litre S. engine with two-stage centrifugal supercharging ; and first appearance of suspension by air struts in racing (B.R.M.)	Alfa Romeo, Ferrari.
1952-3	Formula I replaced (de facto) by Formula II (2 litre U/S or 0.5 litre (S)) ; inter team rivalry between Ferrari, Maserati and Gordini ; many other names giving large numbers of starters.	2-litre engines with four or five cylinders ; single central seat above propeller shaft ; tanks and tyres suffice for 305 miles without a pit stop.	General use of double o.h.c. with S : B ratio of unity or less ; crank speeds of 7,000-8,000 r.p.m. ; one carburetter per cylinder with inlet and exhaust tracts matched for " Ram " effect ; double ignition ; fuel injection used by Connaught and Cooper-Alta ; dominance of de Dion rear axle ; transverse fins on brake drums ; development of the space type frame ; extended use of aluminium and magnesium-zirconium alloys ; light alloy disc or spoked wheels used by Connaught, Cooper and E.R.A.	Connaught, Ferrari, Gordini and Maserati.

APPENDIX C- SPECIFICATION OF SUCCESSFUL CARS, 1906-39*

To achieve a more complete understanding of the specification of any car the following Notes showing the general type of construction followed should be read in conjunction with the specification tables appearing on the following pages.

ENGINE DETAILS

Crankcases. The only exception to the use of light alloy for crankcase construction was No. 123, which used a one-piece cast-iron cylinder block.

Cylinder Blocks. All engines had detachable cylinder blocks except Nos. 123 and 159 (bore cast with crankcase) and Nos. 151, 153, 156, 162 and 163. which had wet liners spigoted into the crankcase.

The detachable blocks were iron castings with the exceptions of Nos. 118, 124, 126, 128, 129, 130, 132, 137, 138, 150, 157, 158, 160 and 164, which used forged steel cylinder barrels with welded-up ports and water jackets. On Nos. 146, 134, 155, light alloy castings were used with dry liners.

Cylinder Heads. All cylinder heads were formed integral with the cylinder block except on Cars Nos. 123, 141, 142, 144, 147, 149, 151, 153, 156, 159, 162 and 163.

Sparking Plugs. All cars with high tension ignition had one 18 mm. sparking plug per cylinder except Nos. 110 and 112, which had two, and No. 118, which had three, 18 mm. plugs per cylinder.

Ignition. Cars Nos. 101, 102, 103, 104, 105, 106, 107, 108 and 109 had low tension magneto ignition ; Cars Nos. 120, 122 and 123 had high tension coil ignition. All others had high tension magneto ignition.

Induction Systems. All cars running with a manifold pressure of over 1 ata. used continuously engaged Roots blowers except No. 129, which, in the 1923 French Grand Prix only, used the Wittig Vane type blower, and Nos. 130 and 140 which used Roots blowers engaged by a clutch coupled to the throttle linkage. In Nos. 129, 130, 131, 140, 150 and 157 pressure air was fed to the carburetters, in all other cases the carburetter was on the suction side of the blower. Two Roots blowers in series giving two-stage boost were used on Nos. 163 and 164.

Bearings. Ball (or roller) main bearings and white metal big-ends were used by Nos. 113, 114, 115. ll5a, 116, 117, 119, 120 and 121. Lead-bronze main bearings and roller big-ends were used by Nos. 153 and 156. All roller (or ball bearings) were used by Nos. 126, 128, 129, 130, 131, 132, 133, 134, 135, 136, 136a, 137, 138, 139, 143, 148, 150, 155, 157, 158, 160, 162, 163 and 164. All others used plain bearings for the big-ends and main bearings.

Pistons. Cars Nos. 100, 101, 102, 103, 104, 105, 106, 107, 108, 109, 110, 111, 112 and 118, used cast-iron pistons. Cars Nos. 113, 114, 115, 115a, 116 and 117 used pressed or forged steel pistons. Car No. 120 and all higher numbers used light alloy pistons.

Camshafts. All o.h.v. engines used two overhead camshafts except 109 (push rods) and single o.h. camshafts on Nos. 110, 112, 117, 123, 133, 135, 139, 140, 151, 153 and 156.

Camshaft Drive. Spur gears were used except on certain overhead camshaft models which used bevel gears and a vertical shaft, these being Nos. 112, 118, 123, 130, 133, 139, 140, 151, 153, 156, 162 and 163.

CHASSIS DETAILS

Brakes. All cars subsequent to No. 116 had mechanically operated four-wheel brakes with the following exceptions-No. 118 rear brakes only, No. 119 ran at Indianapolis with rear brakes only, and Nos. 123, 149, 150, 151, 153, 155, 156, 157, 158, 160, 161, 162, 163 and 164, which had hydraulic operation of four-wheel brakes. Mechanically driven servo assistance to the pedal effort was provided on Nos. 121, 124, 126, 128, 129, 132, 134, 136 and 136a. Cars Nos. 150 upwards (except 159) used two leading shoes, except Nos. 156, 162 and 163, which had four leading shoes.

Frames. All cars had riveted U-section frames except No. 150, with welded box construction ; Nos. 151, 153, 156, 162 and 163 with welded circular section tubes ; and Nos. 157, 158, 160 and 164 with welded oval section.

Suspension. Car No. 161 had quarter elliptic rear springs. Cars Nos. 133, 135, 139, 143, 148, 152 and 154 had reverse quarter elliptic rear springs. Cars Nos. 151, 155 and 159 had transverse semi-elliptic rear springs. Cars Nos. 150 and 157 had transverse quarter elliptic rear springs. Cars Nos. 153, 156, 158, 162, 163 and 164 had torsion bar rear springs. Cars Nos. 151, 153, 156, 161, 162 and 163 had torsion bar front springs. Cars Nos. 150, 153, 154, 155, 157, 158, 160, 164 had coil front springs. Car No. 159 had a transverse semi-elliptic front spring. Cars Nos. 157, 160, 162, 163 and 164 had hydraulically damped springs. All other cars had semi-elliptic springs with friction damping.

Wheels. Cars Nos. 100-l 10 inclusive, and No. 112, used fixed wood wheels, all with Michelin detachable rims with the exceptions of Nos. 102 and 103. Cars Nos. 111, 113 and all higher numbers used Rudge-Whitworth detachable wire wheels, except Nos. 133, 139, 143 and 148, which had detachable wheels made from light alloy castings integral with the brake drums.

Rear Axles. Every car used bevel gears for the right-angle drive, but in Nos. 101, 102, 104, 105, 107, 108, 109, 110, 112, the final drive was by side chains, and in Nos. 157, 158, 160 and 164 by spur wheels. All used differential mechanisms with the exception of No. 100, but the Z.F. limited slip differential was fitted to Nos. 156, 157, 158, 160, 162 and 163.

Fuel Tanks. Rear-mounted fuel tanks were universally used except on Nos. 162 and 163, which had side tanks. Nos. 160 and 164 had a saddle-tank in addition to the rear tank.

Tyres. All cars up to No. 121 used beaded-edged tyres. All higher numbers had straight-sided tyres. Provision for carrying spare rims or wheels was made on Cars Nos. 100-121 inclusive, on Nos. 125, 133 and 139, and for Targa Florio race only, on No. 131. Cars Nos. 153-164 inclusive used a larger section tyre on the rear wheels than they did on the front wheels.

---

* Details of 1947-53 cars are set out on pages 336-7.

APPENDIX C— SPECIFICATION OF SUCCESSFUL CARS, 1906–53

Index No.	*Make*	*Year Built*	*Cylinders No., Bore and Stroke*	*Capacity Litres*	*Piston Area sq. in.*	*H.P.*	*R.P.M.*	*Valves No. and Angle*	*Induction*	*Gears*	*Front Axle*	*Rear Axle*	*Seats*	*Frontal Area sq. ft.*	*Laden Weight cwt.*	*Maximum Speed*
100	Renault	1906	4/166/150	13	134	90	1,200	S	Ata	3	Beam	Torque Arms	2 Par'l.	18	27–28	92 m.p.h.
101	Richard Brasier	1906	4/165/140	12	134	105	1,400	S	,,	3	,,	Dead	,,	17	,,	94 m.p.h.
102	De Dietrich	1906	4/190/160	18.1	175	130	1,100	S	,,	4	,,	,,	,,	19	,,	98 m.p.h.
103	Darracq	1906	4/170/140	12.7	140	120	1,400	S	,,	3	,,	Torque Tube	,,	17	,,	94 m.p.h.
104	Fiat	1907	4/180/160	16.2	158	130	1,600	60° inclined	,,	4	,,	Dead	,,	18	,,	98 m.p.h.
105	De Dietrich	1907	4/180/170	17.3	158	120	1,250	S	,,	4	,,	,,	,,	18	,,	95 m.p.h.
106	Minerva	1907	4/145/120	7.9	102.5	90	2,200	E over 1	,,	3	,,	Torque Arms	,,	18	,,	90 m.p.h.
107	Mercedes	1907	4/175/150	14.4	149	120	1,200	Opposed	,,	4	,,	Dead	,,	19	,,	95 m.p.h.
108	Mercedes	1908	4/155/170	12.8	117	135	1,400	Opposed	,,	4	,,	,,	,,	18	,,	104 m.p.h.
109	Fiat	1908	4/155/160	12	117	100	1,800	60°	,,	4	,,	,,	,,	19	29	101 m.p.h.
110	Fiat	1911	4/130/190	10	83	120	1,650	4 vert.	,,	4	,,	,,	,,	18	33	100 m.p.h.
111	Peugeot	1912	4/110/200	7.6	58.5	130	2,200	4 at 60°	,,	4	,,	Hotchkiss	,,	16	28	100 m.p.h.
112	Fiat	1912	4/150/200	14.1	110	140	1,700	4 vert.	,,	4	,,	Dead	,,	18	31	102 m.p.h.
113	Peugeot	1913	4/100/180	5.6	48.6	115	2,500	4 at 60°	,,	4	,,	Hotchkiss	,,	16	27	108 m.p.h.
114	Delage	1913	4/105/180	6.2	53.8	105	2,300	4 horizontal	,,	5	,,	,,	,,	16	27	100 m.p.h.
115	Peugeot	1913	4/78/156	3	29.4	90	2,900	4 at 60°	,,	4	,,	,,	,,	14.5	21	95 m.p.h.
115A	Sunbeam	1914	4/81/160	3.3	31	92	2,800	Other constructional details as 1913 Peugeot								97 m.p.h.
116	Peugeot	1914	4/92/169	4.5	41.2	112	2,800	4 at 60°	Ata	4	,,	Hotchkiss	2 Staggered	13	26	116 m.p.h.
117	Peugeot	1914	4/75/140	2.5	27.3	80	3,000	4 at 60°	,,	4	,,	,,	2 Par'l.	—	21	92 m.p.h.
118	Mercedes	1914	4/93/165	4.5	42	115	2,800	4 at 60°	,,	4	,,	Torque Tube	,,	13	26½	116 m.p.h.
119	Ballot	1919	8/74/140	4.9	53.2	140	3,000	4 at 60°	,,	4	,,	Hotchkiss	,,	15	28	118 m.p.h.
120	Monroe	1920	4/79/152	3	30.2	98	3,200	4 at 60°	,,	3	,,	,,	2 Staggered	14	—	100 m.p.h.
121	Ballot	1920	8/65/112	3	41	107	3,800	4 at 60°	,,	4	,,	,,	,,	12	23	112 m.p.h.
122	Frontenac	1921	Engine as Duesenberg (123)						Chassis and body as 1920 Monroe (120)					14	—	105 m.p.h.
123	Duesenberg	1921	8/63.5/117	3	39.3	115	4,250	3 at 60°	,,	3	,,	Torque Tube	,,	12	23	114 m.p.h.
124	Fiat	1921	8/65/112	3	41	120	4,400	2 at 90°	,,	4	,,	,,	,,	12	23	118 m.p.h.
125	Sunbeam	1921	8/65/112	3	41	108	4,000	4 at 60°	,,	4	,,	Hotchkiss	2 Par'l.	14	24	108 m.p.h.
126	Fiat	1922	6/65/100	2	30.8	92	5,200	2 at 96°	,,	4	,,	Torque Tube	2 Staggered	12.2	18	105 m.p.h.
127	Miller	1923	8/58.8/89	2	33.6	120	5,000	2 at 90°	,,	3	,,	,,	1 Central	—	—	116 m.p.h.
128	Sunbeam	1923	6/67/94	2	32.9	102	5,000	2 at 96°	,,	3	,,	Hotchkiss	2 Staggered	10.8	18.2	108 m.p.h.
129	Fiat	1923	8/60/87.5	2	35	118	5,600	2 at 96°	1.3 Ata	4	,,	Torque Tube	,,	11	19.5	115 m.p.h.
130	Mercedes	1924	4/70/129	2	24	120	4,500	4 at 60°	1.4 ,,	4	,,	,,	2 Par'l.	12	23	115 m.p.h.
131	Alfa Romeo	1924	8/61/85	2	36.2	165	5,500	2 at 100°	1.7 ,,	4	,,	,,	2 Staggered	11	20	135 m.p.h.
132	Sunbeam	1924	6/67/94	2	32.9	138	5,500	2 at 96°	1.47 ,,	4	,,	,,	,,	10.8	20.7	125 m.p.h.

Index No.	*Make*	*Year Built*	*Cylinders No., Bore and Stroke*	*Capacity Litres*	*Piston Area sq. in.*	*H.P.*	*R.P.M.*	*Valves No. and Angle*	*Induction*	*Gears*	*Front Axle*	*Rear Axle*	*Seats*	*Frontal Area sq. ft.*	*Laden Weight cwt.*	*Maximum Speed*
133	Bugatti	1924	8/60/88	2	35	100	5,000	3 vert.	1.0 Ata	4	Beam	Torque Arm	2 Par'l.	10.8	17.5	112 m.p.h.
134	Delage	1925	12/51.3/80	2	38.7	190	7,000	2 at 100°	1.5 ,,	4	,,	Hotchkiss	2 Staggered	11	21	134 m.p.h.
135	Bugatti	1926	8/52/88	1.5	26.3	110	5,500	3 vert.	1.66 ,,	4	,,	Torque Arm	2 Par'l.	10.8	18	110 m.p.h.
136	Delage	1926	As 136A except exhaust on driver's side ; twin blowers on left side and laden weight only 18.3 cwt.													
136A	Delage	1927	8/55.8/76	1.5	30.5	142	6,500	2 at 100°	1.5 ,,	5	,,	Hotchkiss	1 offset	9.5	19.3	128 m.p.h.
137	Talbot	1926	8/56/75.5	1.5	31	145	6,500	2 at 96°	1.95 ,,	4	,,	Torque Tube	,,	9.5	18	130 m.p.h.
138	Fiat	1927	12/50/63	1.5	36.5	160	6,500	2 at 100°	1.7 ,,	4	,,	,,	,,	9.5	18	135 m.p.h.
139	Bugàtti	1926–30	8/60/100	2.3	35	135	5,300	3 vert.	1.66 ,,	4	,,	Torque Arm	2 Par'l.	10.8	18.5	125 m.p.h.
140	Mercedes-Benz	1928	6/104/150	7.6	70	300	3,500	2 vert.	1.5 ,,	4	,,	Torque Tube	,,	15	32	140 m.p.h.
141	Maserati	1929	16/67/82	4	75	260	5,500	2 at 90°	1.5 ,,	4	,,	,,	1 offset	11.5	23	155 m.p.h.
142	Maserati	1929–31	8/64/98	2.5	41	175	6,000	2 at 90°	1.6 ,,	4	,,	,,	,,	10.5	19	136 m.p.h.
143	Bugatti	1931	8/60/100	2.3	35	160	5,500	2 at 90°	1.66 ,,	4	,,	Torque Arm	2 Par'l.	10.8	18.5	134 m.p.h.
144	Alfa Romeo	1931	8/65/88	2.3	41	160	5,400	2 at 100°	1.66 ,,	4	,,	Torque Tube	1 offset	12	20	130 m.p.h.
145	Alfa Romeo	1931	12/65/88	3.5	61.5	200	5,000	2 at 100°	1.6 ,,	4	,,	2 Torque Tubes and bevels	1 central	10.5	23	140 m.p.h.
146	Alfa Romeo	1932	8/65/100	2.65	41	190	5,400	2 at 100°	1.6 ,,	4	,,	,, in Vee	,,	10.25	18.2	140 m.p.h.
146A	Alfa Romeo	1934	8/69/100	2.9	46.5	210	5,400	2 at 100°	1.6 ,,	4	,,	,, ,,	,,	11	18.7	145 m.p.h.
147	Maserati	1932	8/67/94	2.8	43.6	As No. 142										
148	Bugatti	1931	8/86/107	4.9	72	300	4,400	2 at 90°	1.6 ,,	3	,,	Torque Arms	2 Par'l.	13	22	145 m.p.h.
149	Maserati	1933	8/69/100	2.9	46.5	205	5,500	2 at 90°	1.66 ,,	4	,,	Torque Tube	1 offset	10.5	19	145 m.p.h.
150	Mercedes-Benz	1934–5	8/82/94.5	4	65	430	5,800	4 at 60°	1.66 ,,	4	Wishbone	Swing Axle	1 central	11.8	20	175 m.p.h.
151	Auto Union	1934	16/68/75	4.4	90	295	4,500	2 at 90°	1.6 ,,	5	Trailing Arms	,,	,,	10.8	21.5	165 m.p.h.
152	Bugatti	1934	8/73/100	3.3	52	240	5,400	2 at 90°	1.6 ,,	4	Beam	Torque Arms	1 offset	11	19	150 m.p.h.
153	Auto Union	1935	16/72.5/75	4.95	102.5	375	4,800	2 at 90°	1.66 ,,	5	Trailing Arms	Swing Axle	1 central	10.8	21.5	180 m.p.h.
154	Alfa Romeo	1935	8/72/100	3.2	50.2	265	5,400	2 at 100°	1.66 ,,	3	Dubonnet	2 Torque Tubes	,,	10.25	19	145 m.p.h.
155	Alfa Romeo	1935	8/77/100	3.8	51.5	305	5,400	2 at 100°	1.66 ,,	3	Wishbones	Swing Axle	,,	11.5	20	150 m.p.h.
156	Auto Union	1936	16/75/85	6	109.5	520	5,000	2 at 90°	1.87 ,,	5	Trailing Arms	,,	,,	10.8	22.4	185 m.p.h.
157	Mercedes-Benz	1936	8/86/102	4.74	72	494	5,800	4 at 60°	1.9 ,,	4	Wishbones	,,	,,	12	20	180 m.p.h.
158	Mercedes-Benz	1937	8/94/102	5.66	86	646	5,800	4 at 60°	1.8 ,,	4	,,	de Dion	,,	12.5	21.8	195 m.p.h.
159	Delahaye	1938	12/75/85	4.5	82	220	5,500	2 at 90°	0.0 ,,	4	Leaf and Wishbone	,,	1 offset	14	23	140 m.p.h.
160	Mercedes-Benz	1938	12/67/70	3	65.5	468	7,800	4 at 60°	2.2 ,,	5	Wishbones	,,	1 central	12.5	23.5	180 m.p.h.
161	Maserati	1938	8/78/78	3	59.5	420	7,000	4 at 90°	2 ,,	4	,,	Torque Tube	,,	12	22	170 m.p.h.
162	Auto Union	1938	12/65/75	3	61.5	420	7,000	2 at 90°	1.9 ,,	5	Trailing Arms	de Dion	,,	11.5	23.5	180 m.p.h.
163	Auto Union	1939	12/65/75	3	61.5	485	7,000	2 at 90°	2.6 ,,	5	,,	,,	,,	11.8	24	195 m.p.h.
164	Mercedes-Benz	1939	12/67/70	3	65.5	483	7,800	4 at 60°	2.65 ,,	5	Wishbones	,,	,,	12.5	24	195 m.p.h.

Index No.	*Make*	*Year Built*	*Cylinders No., Bore and Stroke*	*Capacity Litres*	*Piston Area sq. in.*	*H.P.*	*R.P.M.*	*Valves No. and Angle*	*Induction*	*Gears*	*Front Axle*	*Rear Axle*	*Seats*	*Frontal Area sq. ft.*	*Laden Weight cwt.*	*Maximum Speed*
165	Alfa Romeo	1947	8/58/70	1.5	32.8	254	7,800	2 at 90°	2.2	4	Trailing Arms	Swing Axle	1 Central	11.5	19½	160 m.p.h.
166	,, ,,	1950	8/58/70	1.5	32.8	335	8,000	2 at 90°	2.7	4	,,	,,	,,	11.5	20½	175 m.p.h.
167	,, ,,	1951	8/58/70	1.5	32.8	380	9,000	2 at 90°	3.0	4	,,	de Dion	,,	11.5	21½	195 m.p.h.
168	Ferrari	1949	12/55/52.5	1.5	42.2	300	7,500	2 at 60°	2.4	5	Wishbones	Swing Axle	,,	12.0	17	170 m.p.h.
169	,,	1951	12/80/74.5	4.5	93.6	380	7,500	2 at 60°	1.0	4	,,	de Dion	,,	12.5	20½	185 m.p.h.
170	,,	1952	4/90/78	2.0	39.5	180	7,500	2 at 90°	1.0	4	,,	,,	,,	12.0	16	155 m.p.h.
171	B.R.M.	1953	16/49.5/48.3	1.5	47.8	525	10,500	2 at 90°	5.65	5	Trailing Arms	de Dion	,,	10.0	20	195 m.p.h.
172	Maserati	1953	6/75/75	2.0	41.1	190	8,000	2 at 90°	1.0	4	Wishbones	Torque Arms	,,	11.5	16	150 m.p.h.

In order to segregate the detail construction of the post-war cars from the pre-war models the supplementary information in regard to the latter set out on pages 330-l is here reproduced in respect of the principal cars of Formula I and Formula II.

ENGINE DETAILS

Crankcases. All the above cars used light alloy crankcases, Alfa Romeo and Maserati being split on the centre line of the crankshaft and Ferrari and B.R.M. beneath the centre line.

Cylinder Blocks. Alfa Romeo used a detachable light-alloy cylinder block with inserted dry liners ; Ferrari wet liners screwed into the combustion chambers ; B.R.M. detachable flanged wet liners ; and Maserati dry liners pressed into the upper half of the crankcase.

Cylinder Heads. B.R.M. and Maserati used detachable cylinder heads ; the Ferrari cylinder head was detached with liner, and Alfa Romeo integral with the block casting.

Sparking Plugs. All the cars used 14 mm. sparking plugs, numbers 169, 170 and 172 having two plugs per cylinder.

Ignition. B.R.M. used coil ignition, all others magneto ignition.

Induction Systems. Alfa Romeo had two-stage supercharging with Roots blowers in series, and B.R.M. two-stage supercharging with centrifugal compressors. Ferrari and Maserati were unsupercharged, cars numbers 169, 170 and 172 having individual jet and choke assemblies for each cylinder.

Bearings. Alfa Romeo used ball and roller bearings throughout ; the other cars Vandervell three-layer plain bearings.

Pistons. Aluminium alloy.

Camshafts. Two overhead camshafts, except numbers 168 and 169 which had a single overhead camshaft with rockers.

Camshaft Drive. Spur gears, except for numbers 168 and 169 which had chain drive.

CHASSIS DETAILS

Brakes. B.R.M. used disc brakes with hydraulic servo assistance ; all others hydraulically operated, two leading shoe, brakes.

Frames. Alfa Romeo used oval tube frame ; B.R.M. spaced round tubes ; Ferrari and Maserati tubes with triangulated reinforcement.

Suspension. B.R.M. had Lockheed air struts ; Maserati coil front, and quarter-elliptic rear, springs ; Alfa Romeo and Ferrari, transverse leaf springs fore and aft.

Wheels. All cars used detachable wire wheels.

Rear Axle. Alfa Romeo and Ferrari had a central propeller shaft driving a gearbox mounted below the axle centre final drive by spur wheels and a limited slip differential. Maserati had a reduction gear ahead of the bevel gear in the live axle, and B.R.M. a transversely mounted, five-speed, gearbox with offset propeller shaft driving the halfshafts through spur wheels.

Fuel Tanks. All cars had rear-mounted fuel tanks, numbers 167 and 171 having also scuttle or cockpit mounted tanks.

Tyres. All cars used larger section tyres on the back wheels than on the front wheels.

APPENDIX D

MAXIMUM AND RELATIVE LAP SPEEDS OF FASTEST CARS

Year	*Fastest Car*	*Max. Speed m.p.h.*	*Relative Lap Speed*
1906	Renault	92	100
1907	De Dietrich	98	102
1908	Mercedes	104	105.5
1912	Fiat	102	108
1913	Peugeot	108	109
1914	Mercedes	116	112
1619	Ballot	118	118.5
1920	Ballot	112	115
1921	Duesenberg	114	116
1922	Fiat	105	111
1923	Fiat	115	116
1924	Sunbeam	125	121
1925	Delage	134	127.5
1927	Delage	128	129
1928	Bugatti	130	127
1929	Alfa Romeo	138	130
1931	Maserati	136	135.5
1932	Alfa Romeo	140	140
1934	Auto Union	165	150
1935	Mercedes-Benz	175	153
1936	Auto Union	185	158
1937	Mercedes-Benz	195	163.4
1938	Mercedes-Benz	180	160
1939	Mercedes-Benz	195	165
1947	Type 158 Alfa Romeo single-stage	160	150
1948	Type 158 Alfa Romeo two-stage	170	155.7
1949	1.5-litre Ferrari two-stage	165	154
1950	1.5-litre Alfa Romeo two-stage Type 158/159	185	158.4
1951	Type 159/159A Alfa Romeo	195	164.4
1951	4.5-litre U/S Ferrari	185	163.2
1952	Ferrari 2-litre	155	155
1953	Maserati 2-litre	160	158.3

APPENDIX E

LIST OF GRAND PRIX CARS BY NATIONALITY AND YEARS OF ENTRY, TOGETHER WITH NUMBER OF WINS IN MAJOR EUROPEAN ROAD RACES, 1906-53

FRENCH (59)

Alda	1914
Ballot (1)	1921-2
Bayard, Clement	1906-8
Bugatti (33)	1922-38
Corre	1907
Darracq (nil) and Lago-Talbot (5)	1906-51
De Dietrich (1)	1906-12
Delage (8)	1913-27
Delahaye (2)	1938-9
Gobron-Brillié	1906-7
Gordini (1)	1947-53
Hotchkiss	1906
Mathis	1913-21
Mors	1908
Motobloc	1907-8
Panhard	1906-8
Peugeot (5)	19124
Porthos	1907-8
Renault (1)	1906-8
Richard Brasier	1906-8
Rolland Pilain	1912-23
S.E.F.A.C.	1938
Schmid	1924
Talbot (2)	1926-7
Talbot-Darracq	1921
Th. Schneider	19134
Voisin	1923
Vulpes	1906

ITALIAN (102)

Aquila Italiana	1914
Alfa Romeo (58)	1924-51
Dufaux	1907
Ferrari (21)	1949-53
Fiat (8)	1906-25
Itala	1906-14
Maserati (15)	1929-53
Nazzaro	1914

BRITISH (4)

Alta	1948-53
Aston Martin	1922
Austin	1908
B.R.M.	1950-1
Connaught	1952-3
Cooper	1952-3
Halford	1927
H.W.M.	1952-3
Sunbeam (4)	1913-25
Vauxhall	1914
Weigel	1907-8

AMERICAN (1)

Christie	1907
Duesenberg (1)	1921
Miller	1924
Thomas	1908

GERMAN (57)

Auto Union (19)	1934-9
Benz	1908
Mercedes (4)	1906-24
Mercedes-Benz (34)	1926-39
Opel	1908-14

BELGIAN (1)

Excelsior	1912-3
Germain	1907-8
Minerva (1)	1907
Nagant	1914

SWISS (Nil)

Piccard Pictet	1914

INDEX TO VOLUME TWO

ILLUSTRATIONS

ILLUSTRATIONS—*Continued*

GRAPHS